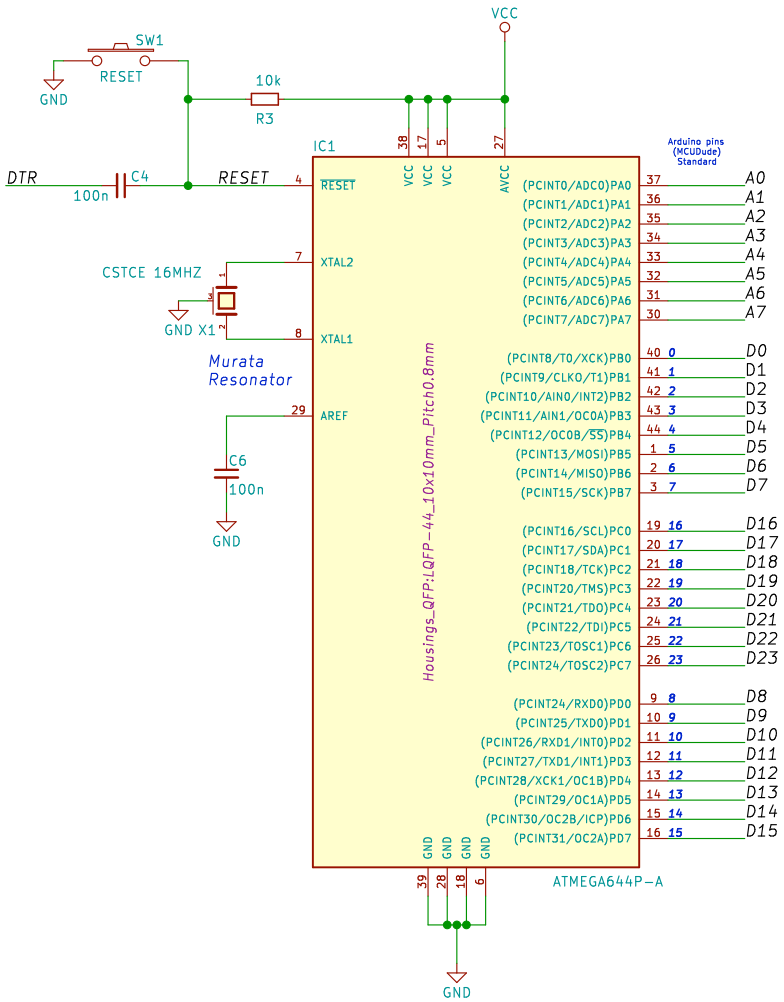

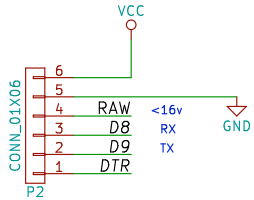

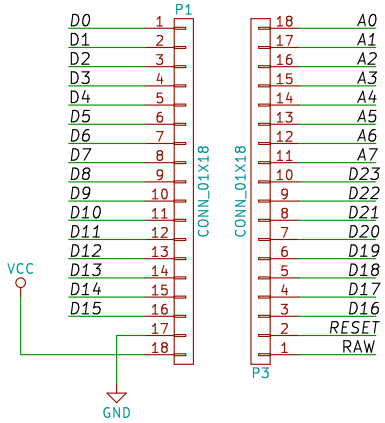

U1
MIC5219-xxYM5 -> xx = voltage 1.8->5v

X1
CSTCE 16MOV53-R0 4-20Mhz

RAW -> input voltage before the voltage regulator
VCC -> output voltage of the regulator, IC voltage

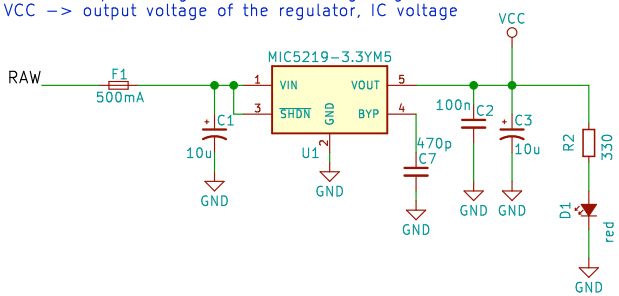

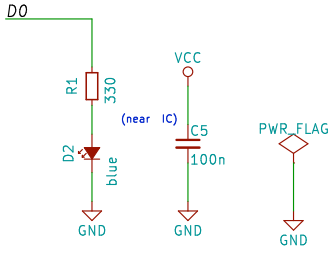

Mightyduino is an arduino based on Atmega 644p/1024p
dev76.org

Sheet: /
File: mightyduino.sch

Title: Mightyduino

Size: A4	Date: 2017-01-7	**Rev: 1.3**
KiCad E.D.A. kicad 4.0.4-stable		Id: 1/1