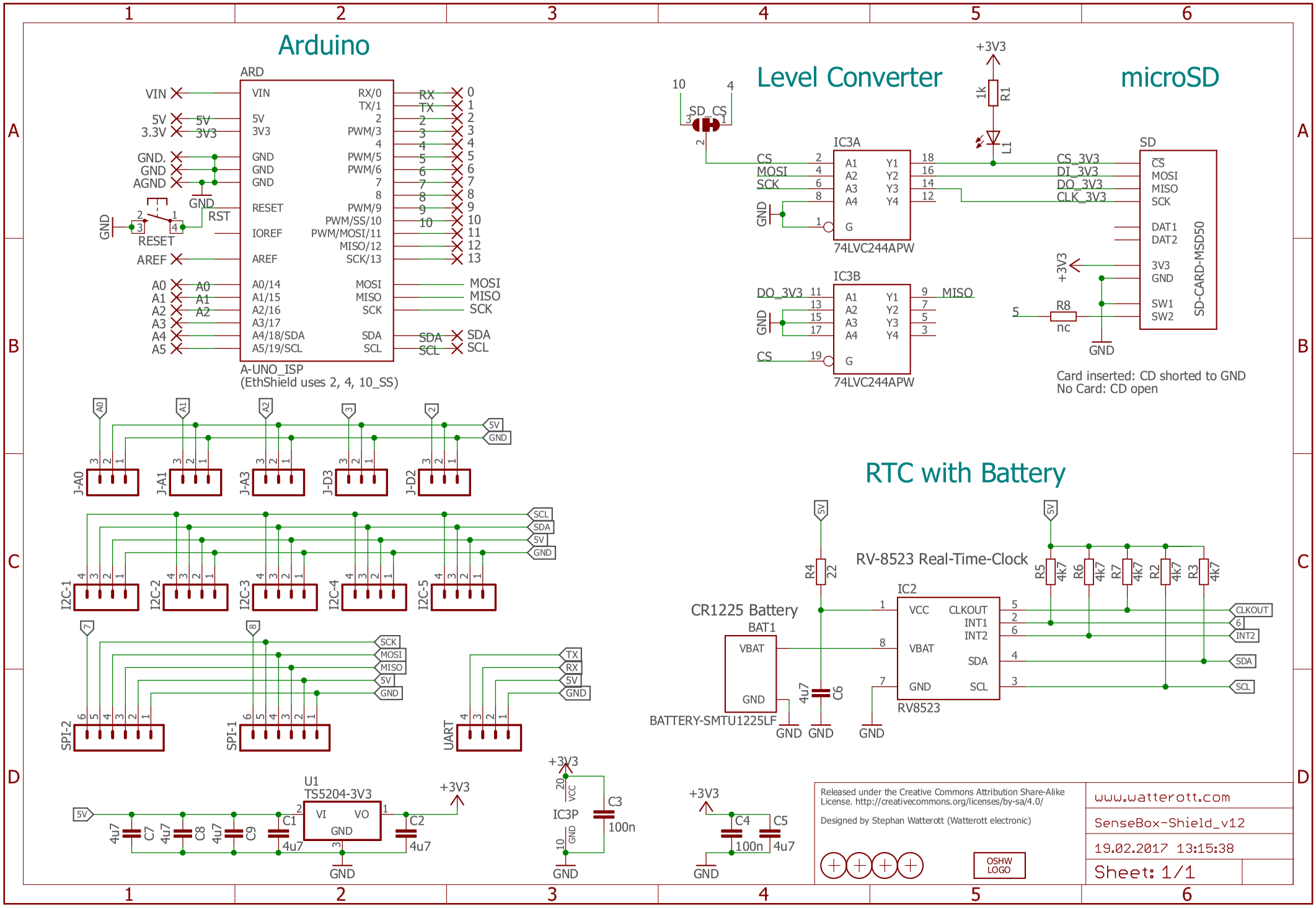
Arduino
ARD
VIN
5V
3V3
GND
RESET
IOREF
AREF
A0/14
A1/15
A2/16
A3/17
A4/18/SDA
A5/19/SCL
RX/0
TX/1
PWM/3
PWM/5
PWM/6
PWM/9
PWM/SS/10
PWM/MOSI/11
MISO/12
SCK/13
MOSI
MISO
SCK
SDA
SCL
A-UNO_ISP
(EthShield uses 2, 4, 10_SS)
Level Converter
IC3A
IC3B
74LVC244APW
CS_3V3
DI_3V3
DO_3V3
CLK_3V3
microSD
SD
SD-CARD-MSD50
DAT1
DAT2
SW1
SW2
R8
nc
Card inserted: CD shorted to GND
No Card: CD open
RTC with Battery
RV-8523 Real-Time-Clock
IC2
RV8523
CR1225 Battery
BAT1
BATTERY-SMTU1225LF
VBAT
VCC
CLKOUT
INT1
INT2
R1 1k
L1
R4 22
C6 4u7
R5 4k7
R6 4k7
R7 4k7
R2 4k7
R3 4k7
J-A0
J-A1
J-A3
J-D3
J-D2
I2C-1
I2C-2
I2C-3
I2C-4
I2C-5
SPI-2
SPI-1
UART
U1
TS5204-3V3
VI
VO
C1 4u7
C2 4u7
C7 4u7
C8 4u7
C9 4u7
IC3P
C3 100n
C4 100n
C5 4u7
SD_CS
RESET
Released under the Creative Commons Attribution Share-Alike License. http://creativecommons.org/licenses/by-sa/4.0/
Designed by Stephan Watterott (Watterott electronic)
OSHW LOGO
www.watterott.com
SenseBox-Shield_v12
19.02.2017 13:15:38
Sheet: 1/1

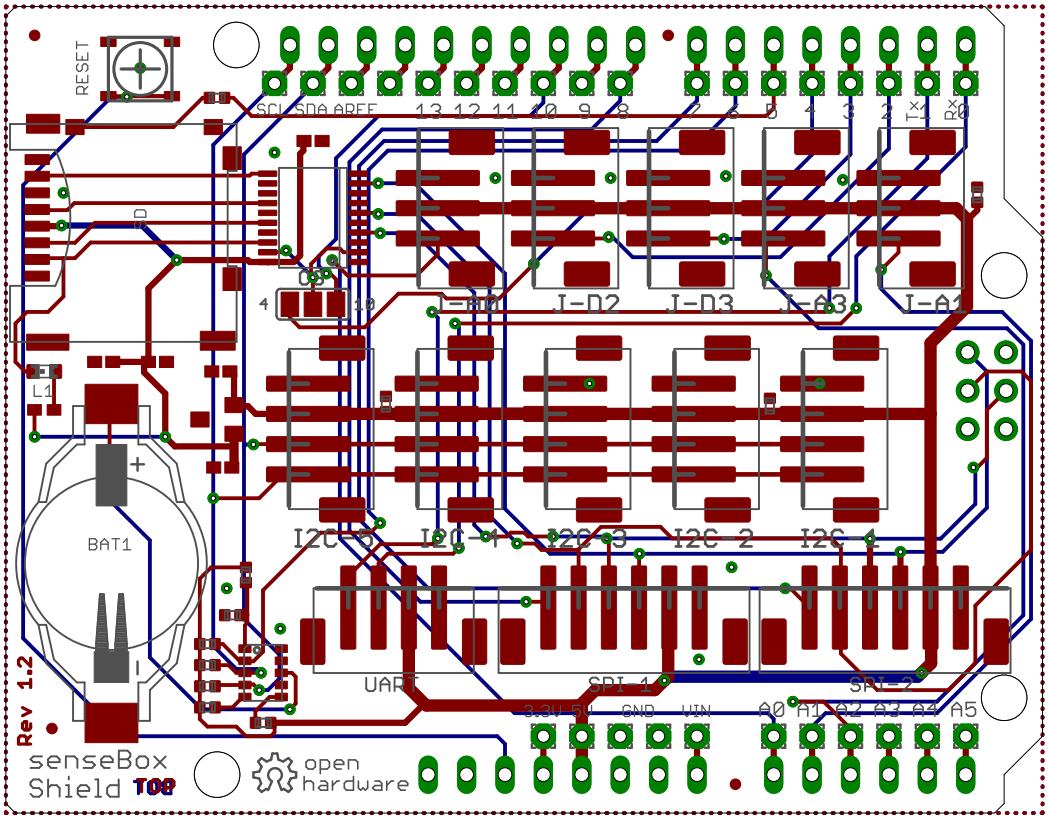
RESET
SCL SDA AREF 13 12 11 10 9 8 7 6 5 4 3 2 TX1 RX0
I-D2
I-D3
I-A1
L1
BAT1
I2C 2
I2C 4
UART
SPI 1
SPI 2
3.3V EN GND VIN A0 A1 A2 A3 A4 A5
Rev 1.2
senseBox
Shield TOP
open
hardware