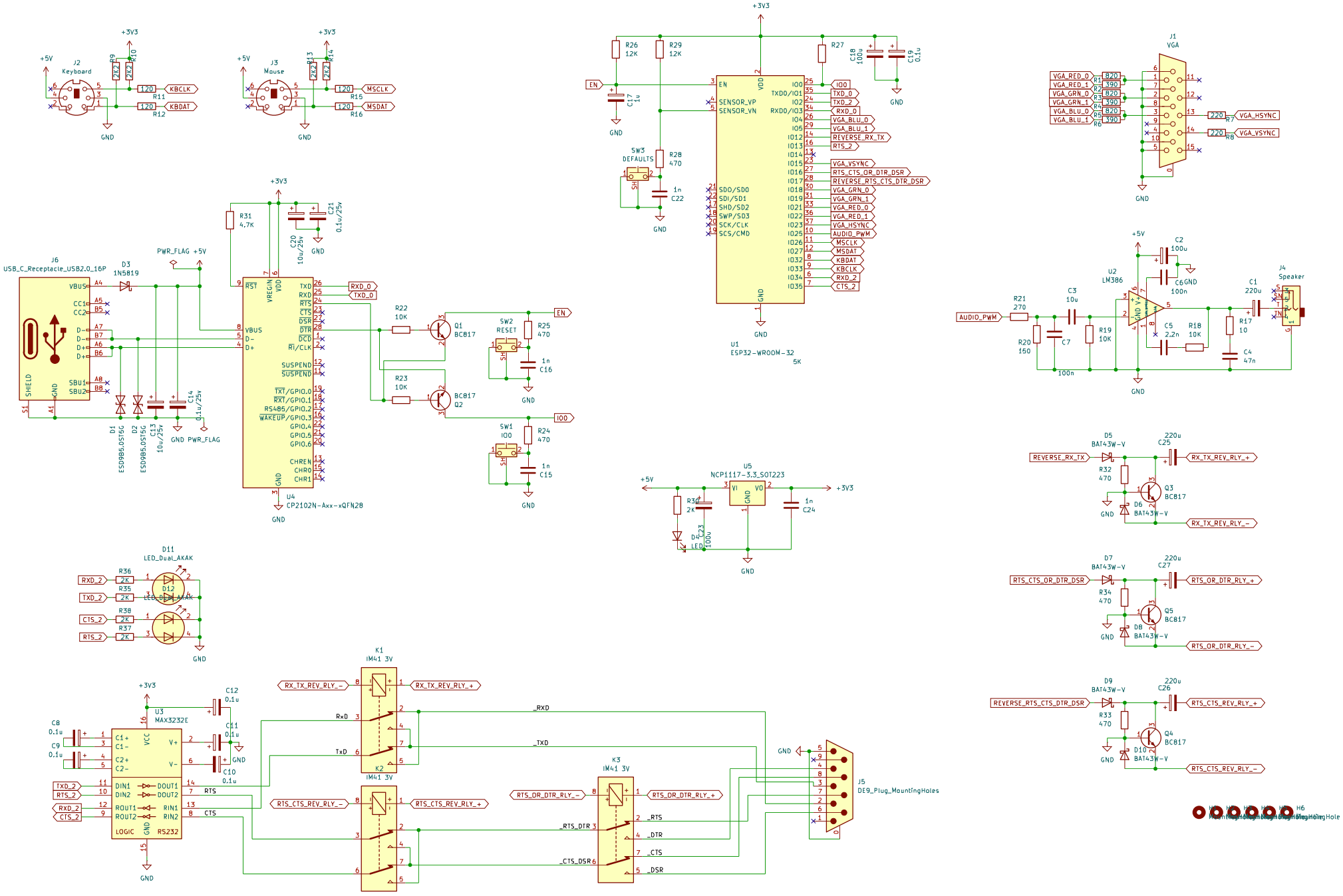
J2
Keyboard
J3
Mouse
KBCLK
KBDAT
MSCLK
MSDAT
J6
USB_C_Receptacle_USB2.0_16P
D3
1N5819
PWR_FLAG
U4
CP2102N-Axx-xQFN28
U1
ESP32-WROOM-32
5K
SW3
DEFAULTS
SW2
RESET
SW1
IO0
Q1
BC817
Q2
BC817
J1
VGA
VGA_HSYNC
VGA_VSYNC
U2
LM386
J4
Speaker
AUDIO_PWM
U5
NCP1117-3.3_SOT223
D11
LED_Dual_AKAK
D12
LED_Dual_AKAK
U3
MAX3232E
K1
IM41 3V
K2
IM41 3V
K3
IM41 3V
J5
DE9_Plug_MountingHoles
D5
BAT43W-V
Q3
BC817
D6
BAT43W-V
D7
BAT43W-V
Q5
BC817
D8
BAT43W-V
D9
BAT43W-V
Q4
BC817
D10
BAT43W-V
REVERSE_RX_TX
RX_TX_REV_RLY_+
RX_TX_REV_RLY_-
RTS_CTS_OR_DTR_DSR
RTS_OR_DTR_RLY_+
RTS_OR_DTR_RLY_-
REVERSE_RTS_CTS_DTR_DSR
RTS_CTS_REV_RLY_+
RTS_CTS_REV_RLY_-
H1
H2
H3
H4
H5
H6
MountingHole