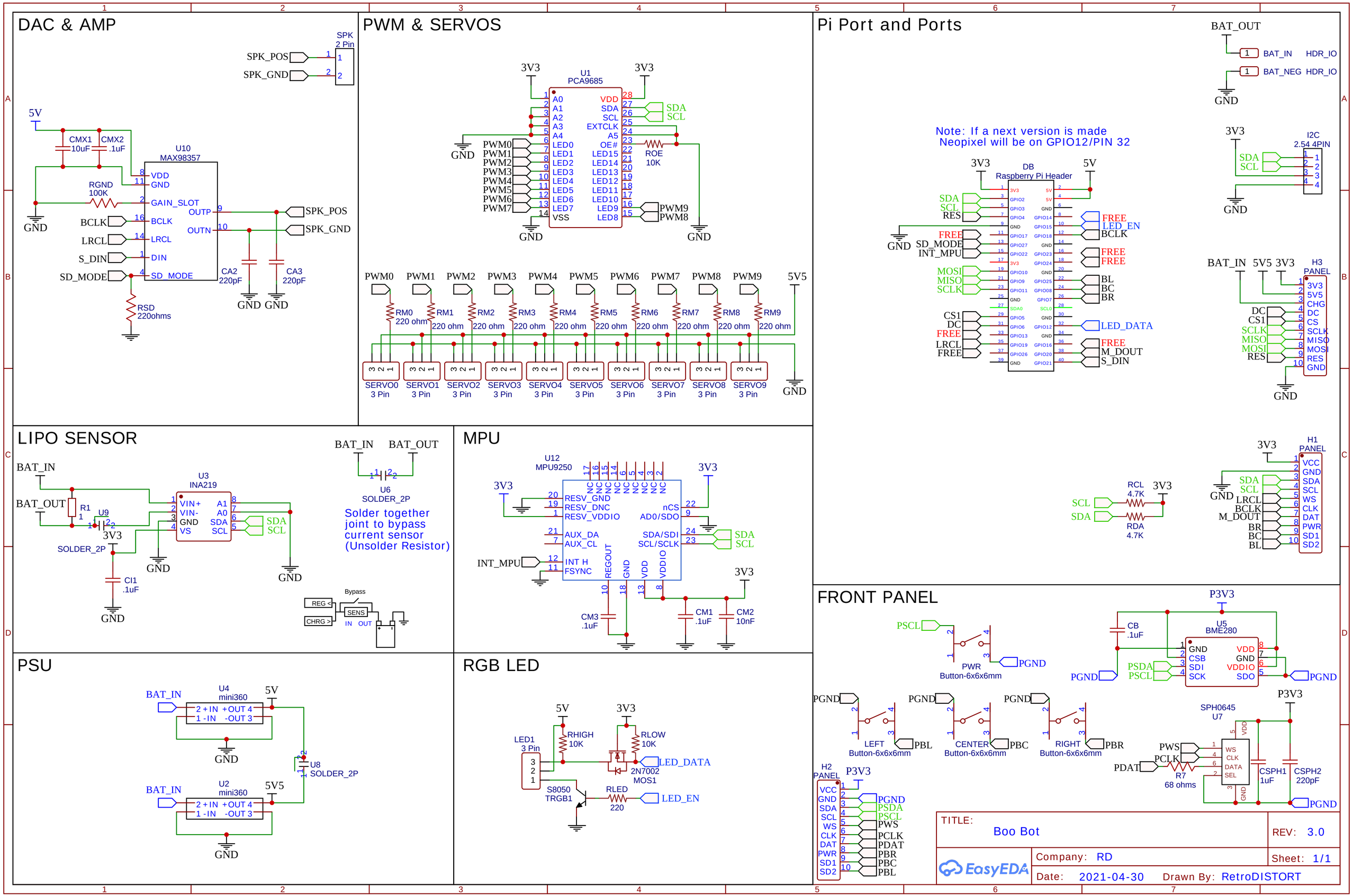
DAC & AMP
SPK
2 Pin
SPK_POS
SPK_GND
5V
CMX1
10uF
CMX2
.1uF
U10
MAX98357
VDD
GND
GAIN_SLOT
OUTP
OUTN
BCLK
LRCL
DIN
SD_MODE
RGND
100K
GND
CA2
220pF
CA3
220pF
RSD
220ohms
PWM & SERVOS
U1
PCA9685
3V3
A0
A1
A2
A3
A4
LED0
LED1
LED2
LED3
LED4
LED5
LED6
LED7
VSS
VDD
SDA
SCL
EXTCLK
A5
OE#
LED15
LED14
LED13
LED12
LED11
LED10
LED9
LED8
ROE
10K
PWM0
PWM1
PWM2
PWM3
PWM4
PWM5
PWM6
PWM7
PWM8
PWM9
5V5
RM0
220 ohm
RM1
RM2
RM3
RM4
RM5
RM6
RM7
RM8
RM9
SERVO0
SERVO1
SERVO2
SERVO3
SERVO4
SERVO5
SERVO6
SERVO7
SERVO8
SERVO9
3 Pin
Pi Port and Ports
BAT_OUT
BAT_IN
BAT_NEG
HDR_IO
Note: If a next version is made
Neopixel will be on GPIO12/PIN 32
DB
Raspberry Pi Header
FREE
LED_EN
BCLK
SD_MODE
INT_MPU
BL
BC
BR
LED_DATA
M_DOUT
S_DIN
I2C
2.54 4PIN
H3
PANEL
3V3
5V5
CHG
DC
CS
SCLK
MISO
MOSI
RES
GND
H1
PANEL
VCC
WS
DAT
PWR
SD1
SD2
LRCL
BCLK
M_DOUT
RCL
4.7K
RDA
4.7K
LIPO SENSOR
BAT_IN
BAT_OUT
R1
1
U9
SOLDER_2P
U3
INA219
VIN+
VIN-
VS
A1
A0
SDA
SCL
CI1
.1uF
U6
SOLDER_2P
Solder together
joint to bypass
current sensor
(Unsolder Resistor)
Bypass
REG <
CHRG >
SENS
IN
OUT
MPU
U12
MPU9250
RESV_GND
RESV_DNC
RESV_VDDIO
AUX_DA
AUX_CL
INT H
FSYNC
REGOUT
nCS
AD0/SDO
SDA/SDI
SCL/SCLK
VDDIO
CM3
.1uF
CM1
.1uF
CM2
10nF
PSU
U4
mini360
U2
mini360
+IN
-IN
+OUT
-OUT
U8
SOLDER_2P
RGB LED
LED1
3 Pin
RHIGH
10K
RLOW
10K
2N7002
MOS1
S8050
TRGB1
RLED
220
FRONT PANEL
PSCL
PGND
PWR
Button-6x6x6mm
P3V3
U5
BME280
CB
.1uF
PSDA
PSCL
SDO
LEFT
CENTER
RIGHT
PBL
PBC
PBR
SPH0645
U7
PWS
PCLK
PDAT
R7
68 ohms
CSPH1
1uF
CSPH2
220pF
H2
PANEL
PWS
PCLK
PDAT
PBR
PBC
PBL
TITLE:
Boo Bot
REV: 3.0
Company: RD
Sheet: 1/1
Date: 2021-04-30
Drawn By: RetroDISTORT
EasyEDA