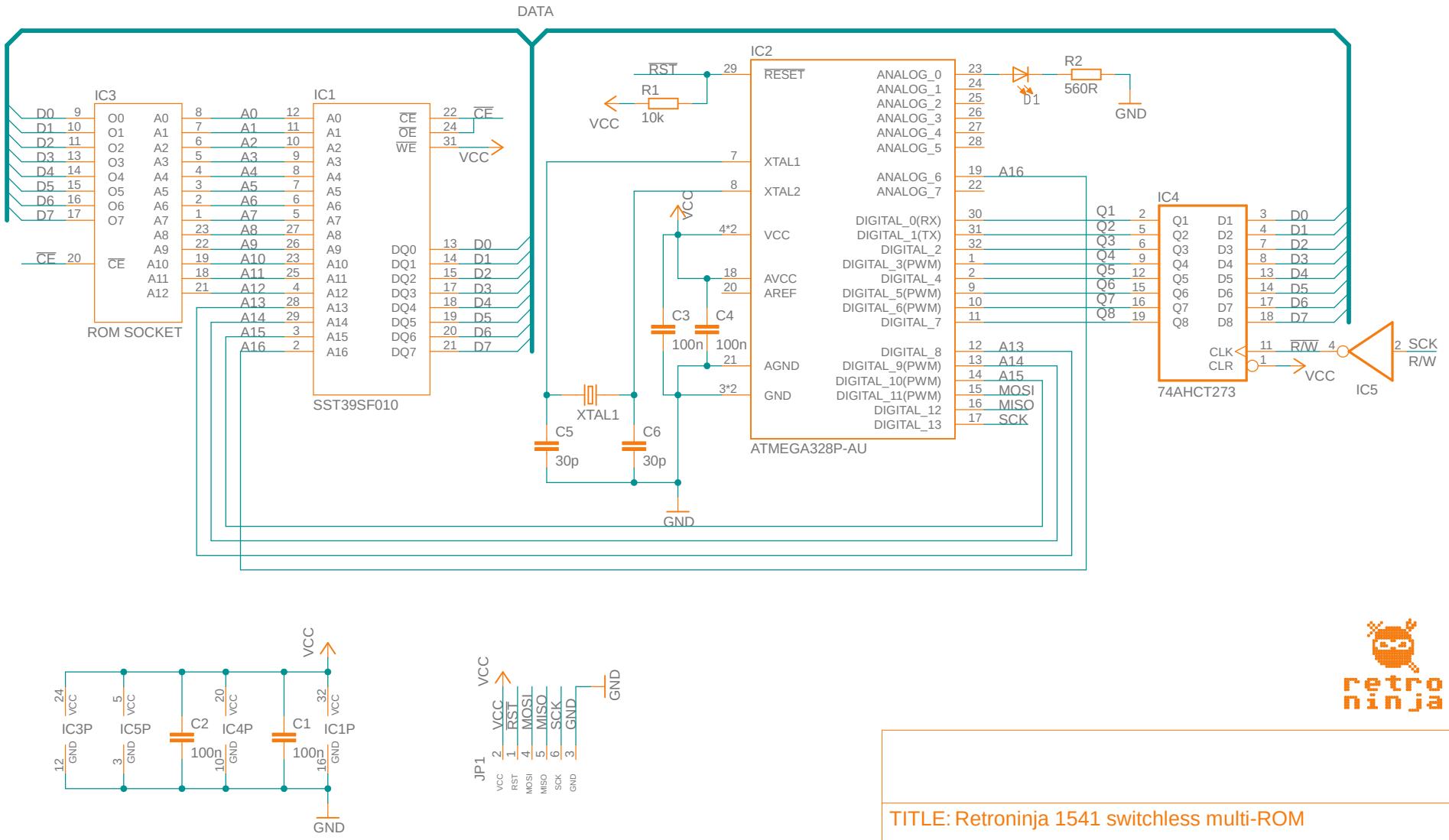

TITLE: Retroninja 1541 switchless multi-ROM

Document Number:

REV: 1

Date: 14 May 2021

Sheet: 1/1