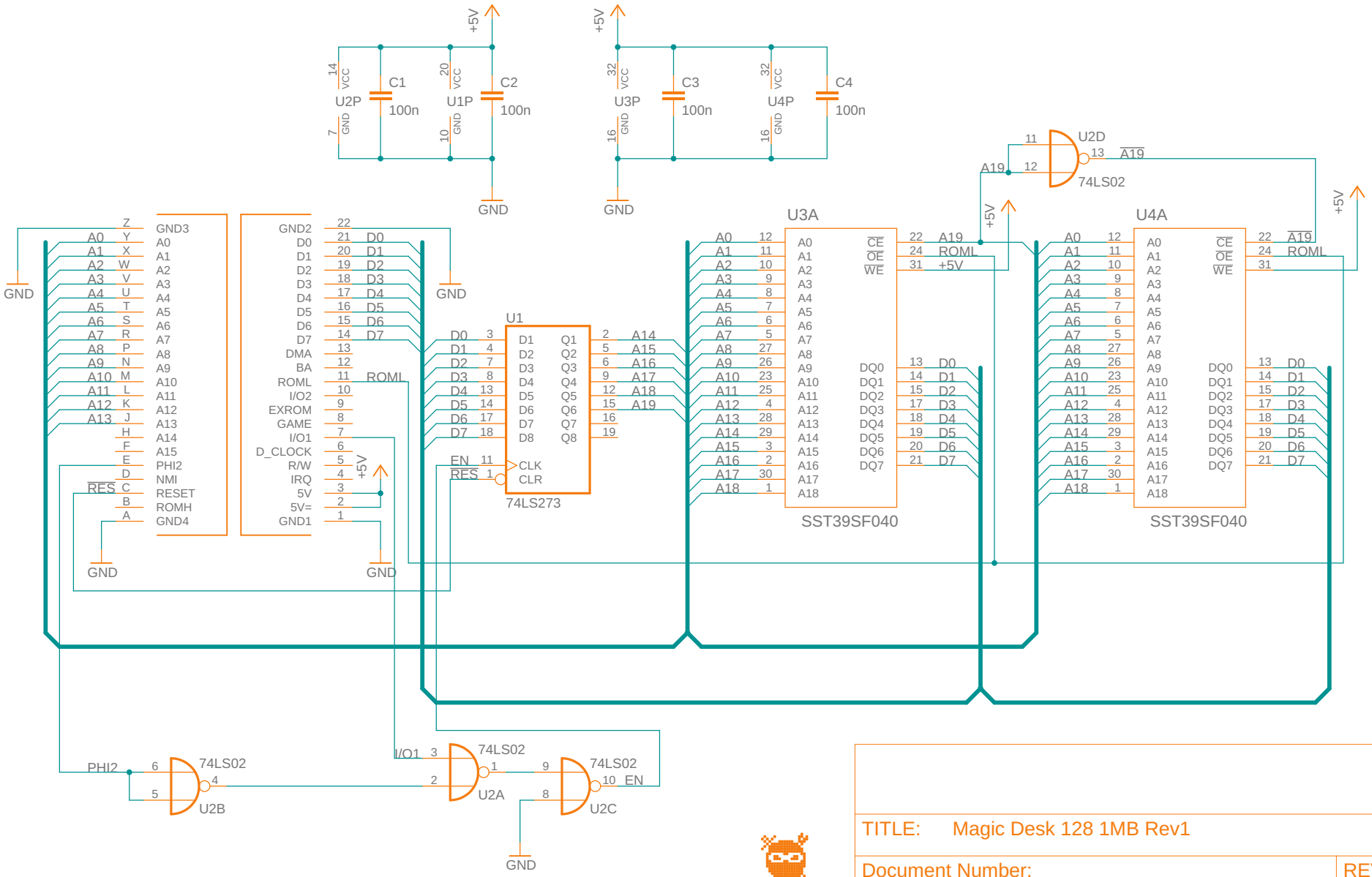

TITLE: Magic Desk 128 1MB Rev1

Document Number:

REV: 1

Date: 2022-02-27

Sheet: 1/1