VETROelite
[engineering]

IMBOCCATURA: FASCETTA
CODICE: K1236
FORO MINIMO PASSANTE ∅23

Div Max Asse Orto. [2.9 mm]
Max Deviation Vert Axis.

[VISTA FRONTE]
[FRONT VIEW]

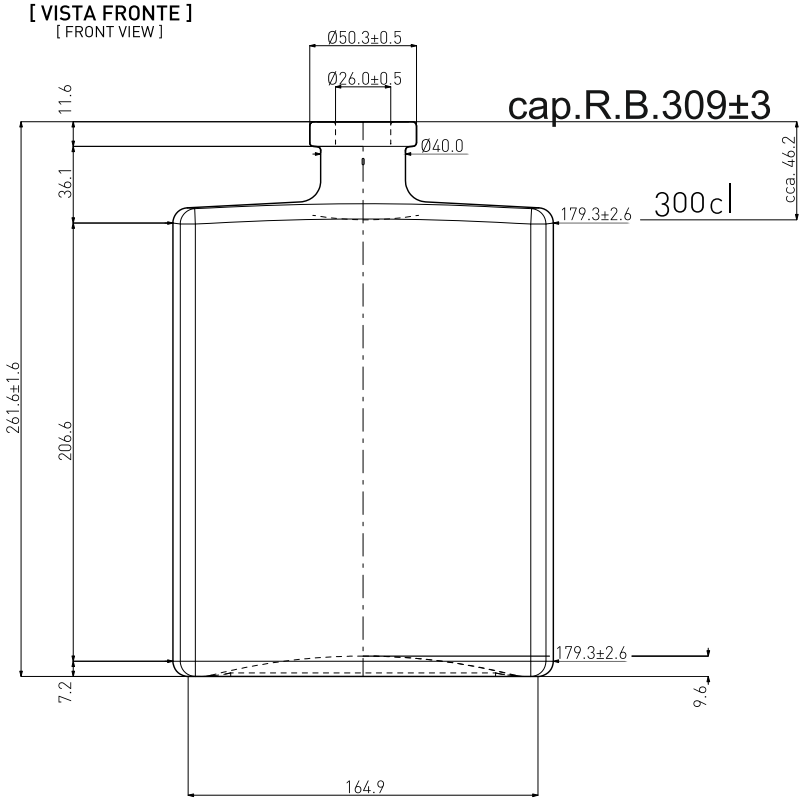

[VISTA LATO]
[SIDE VIEW]

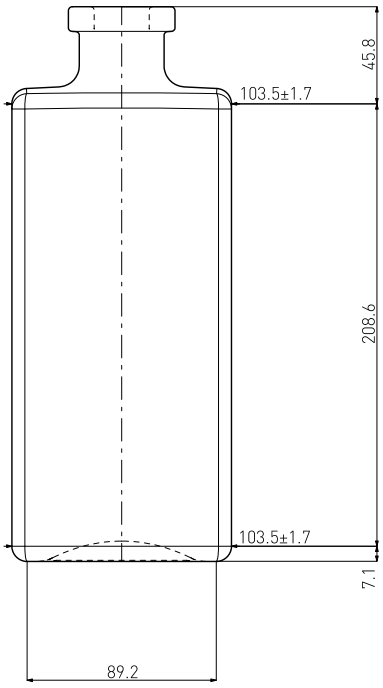

[VISTA FONDO]
[BOTTOM VIEW]

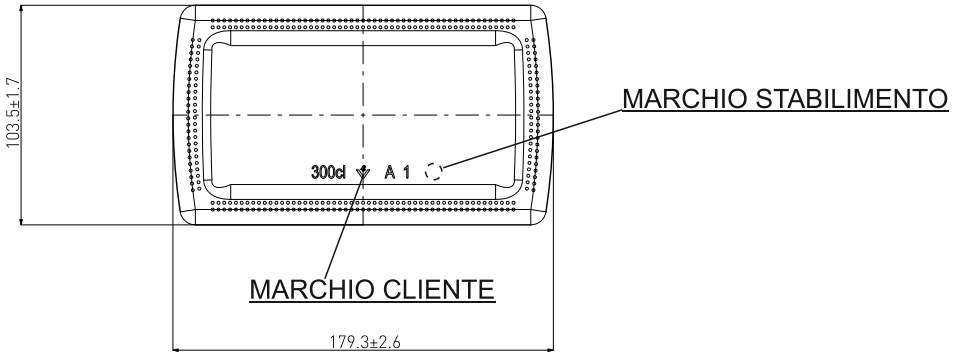

ARTICOLO - Article			
CAPRI VE 300cl			
N° SERIE Series Number E6182	SCALA Scale 1:1	CAPACITA' NOM. cl Capacity	300
N° DIS. Drawing ESTERNO	DESIGN By	CAPACITA' RB cl Brimful Capacity	309
DATA Date 20-01-20	DIR. TECNICA Appr. By CM	PESO VETRO gr Weight Glass	2400
NOTE Note		IMBOCCATURA Finish	K1236
		COD. ARTICOLO Code Number	0H44