2.1 Introduction

Resultant : *A single force which replaces the given force system having same effect is called Resultant force.*

In this chapter we shall learn to find the resultant of coplanar force system for

1. Concurrent force system
2. Parallel force system
3. General force system

The process of finding the resultant of any number of forces is called the *composition of forces*.

Equilibrant : It is *a single force* which brings the system to *equilibrium*, thus ***equilibrant*** is *equal in magnitude, opposite in direction* and *collinear to resultant force*.

2.2 Resultant of Concurrent Force System Using Method of Resolution

If number of the forces are more than two then its resultant can be found out more conveniently by *method of resolution*.

Procedure

Step 1 : Find $R_x = \Sigma F_x$

Resolve all the forces along the horizontal x-axis and take the algebraic sum of force components considering proper sign convention. (+ve →)

Step 2 : Find $R_y = \Sigma F_y$

Resolve all the forces along the vertical y-axis and take the algebraic sum of force components considering proper sign convention. (+ve ↑)

Step 3 : Find R

Magnitude of resultant force is given by $R = \sqrt{(\Sigma F_x)^2 + (\Sigma F_y)^2}$

Step 4 : Find θ

Inclination of the line of action of resultant force with horizontal x-axis is given by

$$\tan\theta = \left|\frac{\Sigma F_y}{\Sigma F_x}\right| \quad \therefore \ \theta = \tan^{-1}\left(\frac{\Sigma F_y}{\Sigma F_x}\right)$$

Note : Use only positive value of ΣF_x and ΣF_y for finding θ with horizontal x-axis so the value of θ will be always acute angle.

Step 5 : Position of resultant

Resultant may lie in any four quadrant depending on the signs of ΣF_x and ΣF_y

(i) ΣF_x (+ve) and ΣF_y (+ve) — Ist Quadrant

(ii) ΣF_x (−ve) and ΣF_y (+ve) — IInd Quadrant

(iii) ΣF_x (−ve) and ΣF_y (−ve) — IIIrd Quadrant

(iv) ΣF_x (+ve) and ΣF_y (−ve) — IVth Quadrant

The point of application of the resultant for concurrent force system is the point of concurrency.

Note : (i) If resultant is horizontal then $\Sigma F_y = 0$ and $\Sigma F_x = R$.

(ii) If resultant is vertical then $\Sigma F_x = 0$ and $\Sigma F_y = R$.

(iii) If resultant is zero then $\Sigma F_x = 0$ and $\Sigma F_y = 0$.

Hint : For finding resultant of two concurrent forces one can prefer parallelogram law or triangle law as discussed in previous chapter.

2.2.1 *Solved Problems*

Problem 1

Two forces of 400 N and 600 N act at an angle 60° to each other. Determine the resultant in magnitude and direction if **(i)** the forces have same sense **(ii)** the forces have different senses.

Solution

Case (i) : Forces have same senses

Method I : Parallelogram Law

Let both forces be pull forces.

Magnitude of Resultant R is given by

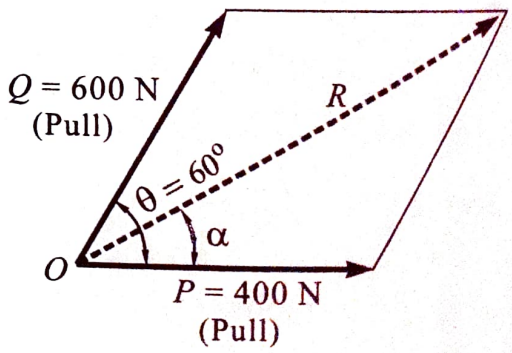

Fig. 2.1(a)

$$R = \sqrt{P^2 + Q^2 + 2\,PQ\cos\theta}$$

$$\therefore R = \sqrt{(400)^2 + (600)^2 + 2 \times 400 \times 600 \cos 60}$$

$$\therefore R = 871.78 \text{ N} \quad \textbf{Ans.}$$

Direction of the resultant

$$\tan\alpha = \frac{Q\sin\theta}{P + Q\cos\theta}$$

$$\therefore \tan\alpha = \frac{600 \sin 60}{400 + 600 \cos 60} = 0.742$$

$$\therefore \alpha = \tan^{-1}(0.742) = 36.59^\circ \quad \textbf{Ans.}$$

Method II : Triangle Law

By cosine rule

$$R = \sqrt{(400)^2 + (600)^2 - 2 \times 400 \times 600 \cos 120}$$

$$R = 871.78 \text{ N} \quad \textbf{Ans.}$$

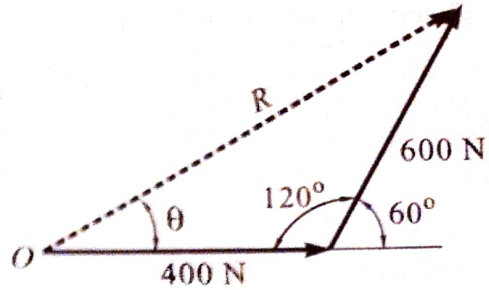

Fig. 2.1(b)

By sine rule

$$\frac{600}{\sin \theta} = \frac{871.78}{\sin 120}$$

$$\theta = 36.59^\circ$$

Resultant $R = 871.78$ N $(\measuredangle 36.59^\circ)$

Method III : Resolution of Force

$$\Sigma F_x = 400 + 600 \cos 60 = 700 \text{ N } (\rightarrow)$$

$$\Sigma F_y = 600 \sin 60 = 519.62 \text{ N } (\uparrow)$$

Magnitude of resultant R

$$R = \sqrt{(\Sigma F_x)^2 + (\Sigma F_y)^2}$$

$$R = \sqrt{(700)^2 + (519.62)^2}$$

$$R = 871.78 \text{ N} \quad \textbf{Ans.}$$

Inclination of the resultant θ

$$\tan \theta = \frac{\Sigma F_y}{\Sigma F_x} \quad \therefore \theta = \tan^{-1}\left(\frac{519.62}{700}\right)$$

$$\therefore \theta = 36.59^\circ \quad \textbf{Ans.}$$

Resultant $R = 871.78$ N $(\measuredangle 36.59^\circ)$

Case (ii) : When both forces have different senses

Method I : Parallelogram Law

Let P be a pull force and Q be push force.

Convert Q as a pull force by extending its line of action.
($\because$ Principle of transmissibility of force)

$$\therefore \theta = 180^\circ - 60^\circ = 120^\circ$$

Magnitude of the resultant

$$R = \sqrt{P^2 + Q^2 + 2\,PQ \cos \theta}$$

$$\therefore R = \sqrt{400^2 + 600^2 + 2 \times 400 \times 600 \cos 120}$$

$$\therefore R = 529.15 \text{ N} \quad \textbf{Ans.}$$

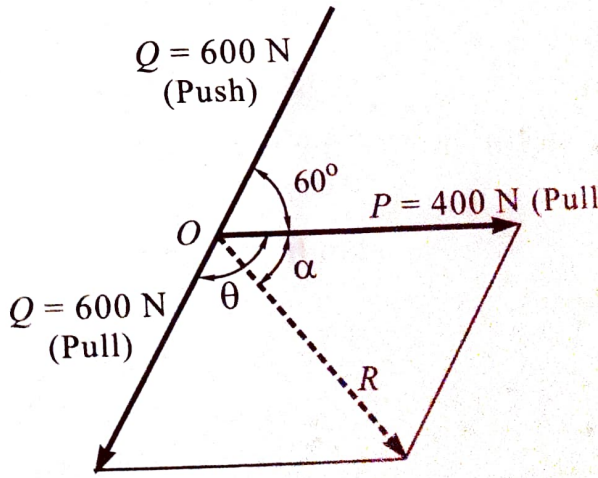

Fig. 2.1(c)

Direction of the resultant

$$\tan \alpha = \frac{Q \sin \theta}{P + Q \cos \theta} = \frac{600 \sin 120}{400 + 600 \cos 120} = 5.196$$

$$\therefore \alpha = \tan^{-1}(5.196) = 79.11^\circ \quad \textbf{Ans.}$$

Method II : Triangle Law

By cosine rule

$$R = \sqrt{(400)^2 + (600)^2 - 2 \times 400 \times 600 \cos 60}$$

$$\therefore R = 529.15 \text{ N} \quad \textbf{Ans.}$$

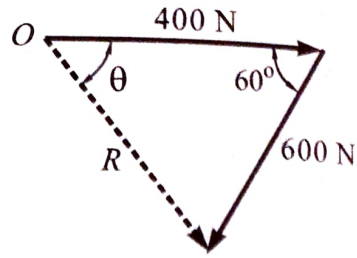

Fig. 2.1(d)

By sine rule

$$\frac{600}{\sin \theta} = \frac{529.15}{\sin 60}$$

$$\therefore \sin \theta = 6.982$$

$$\therefore \theta = 79.11^\circ$$

$$\therefore \text{Resultant } R = 529.15 \text{ N } (\searrow 79.11^\circ)$$

Method III : Resolution of Force

$$\Sigma F_x = 400 - 600 \cos 60$$

$$\therefore \Sigma F_x = 100 \text{ N } (\rightarrow)$$

$$\Sigma F_y = -600 \sin 60 = -519.62$$

$$\therefore \Sigma F_y = 519.62 \text{ N } (\downarrow)$$

Magnitude of resultant R

$$R = \sqrt{(\Sigma F_x)^2 + (\Sigma F_y)^2}$$

$$R = \sqrt{(100)^2 + (519.62)^2}$$

$$R = 529.15 \text{ N} \quad \textbf{Ans.}$$

Inclination of the resultant θ

$$\tan \theta = \frac{\Sigma F_y}{\Sigma F_x}$$

$$\therefore \theta = \tan^{-1}\left(\frac{519.62}{100}\right)$$

$$\therefore \theta = 79.11^\circ \quad \textbf{Ans.}$$

$$\therefore \text{Resultant } R = 529.15 \text{ N } (\searrow 79.11^\circ)$$

Problem 2

A car is pulled by means of two ropes as shown in *figure 2.2*. The tension in one rope is $P = 2.6$ kN. If the resultant of two forces applied at O is directed along the x-axis of the car. Find the tension in the other rope and magnitude of the resultant.

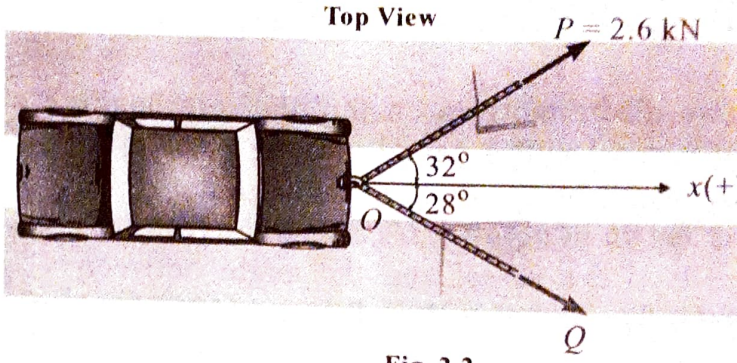

Fig. 2.2

Solution

Method I : Parallelogram Law

By parallelogram law we have

$$\tan 28 = \frac{2.6 \sin 60}{Q + 2.6 \cos 60}$$

$$Q \tan 28 + 2.6 \cos 60 \times \tan 28 = 2.6 \sin 60$$

$$\therefore Q = 2.934 \text{ kN} \quad \textbf{Ans.}$$

$$\therefore R = \sqrt{(2.6)^2 + (2.934)^2 + 2 \times 2.6 \times 2.934 \cos 60}$$

$$\therefore R = 4.8 \text{ kN } (\rightarrow) \quad \textbf{Ans.}$$

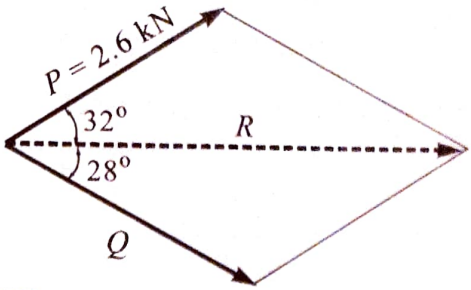

Fig. 2.2(a)

Method II : Triangle Law

By sine rule

$$\frac{2.6}{\sin 28} = \frac{Q}{\sin 32} = \frac{R}{\sin 120}$$

$$Q = \frac{2.6 \sin 32}{\sin 28} \qquad R = \frac{2.6 \sin 120}{\sin 28}$$

$$Q = 2.934 \text{ kN } (\searrow 28^\circ) \qquad R = 4.796 \text{ kN } (\rightarrow) \quad \textbf{Ans.}$$

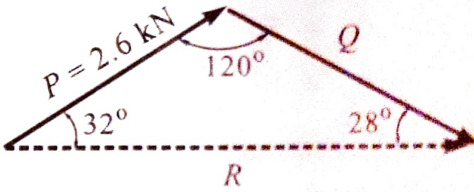

Fig. 2.2(b)

Method III : Resolution of Force

$\because$ Resultant is horizontal

$$\therefore \Sigma F_y = 0$$

$$\therefore 2.6 \sin 32 - Q \sin 28 = 0$$

$$\therefore Q = 2.934 \text{ kN } (\searrow 28^\circ) \quad \textbf{Ans.}$$

$\because$ Resultant is horizontal

$$\therefore R = \Sigma F_x$$

$$R = 2.6 \cos 32 + 2.934 \cos 28$$

$$R = 4.796 \text{ kN } (\rightarrow) \quad \textbf{Ans.}$$

Problem 3

Two electromotives on the opposite banks of a canal pull a vessel moving parallel to the banks by means of two horizontal ropes as shown in *figure 2.3(a)*. Find the resultant pull on the vessel and the angle between each rope and the sides of the canal.

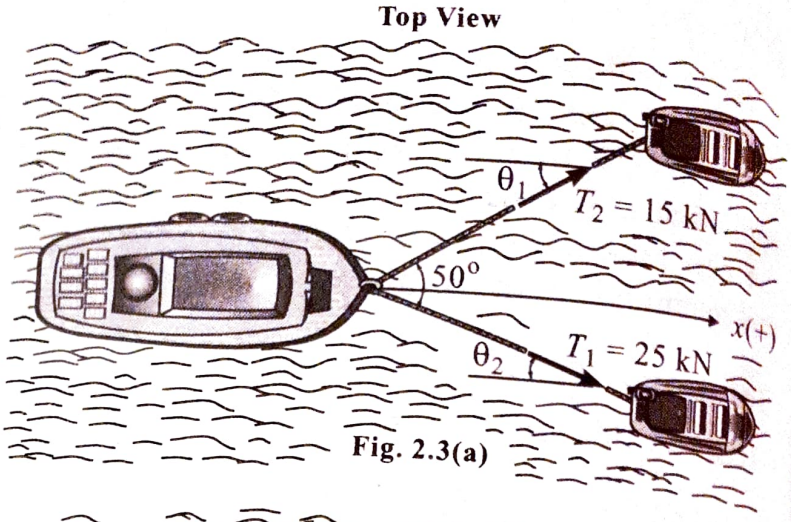

Fig. 2.3(a)

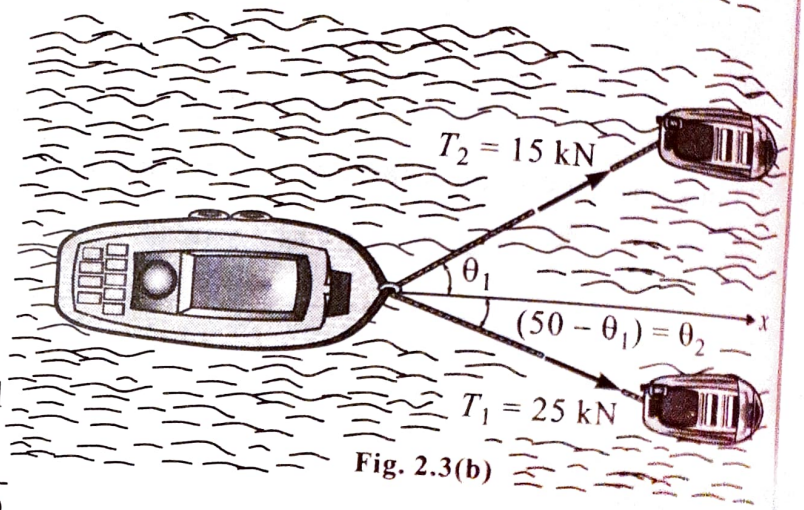

Fig. 2.3(b)

Solution

By parallelogram law we have

Resultant pull on the vessel

$$R = \sqrt{T_1^2 + T_2^2 + 2\,T_1T_2 \cos 50}$$

$$\therefore R = \sqrt{25^2 + 15^2 + 2 \times 25 \times 15 \cos 50}$$

$$\therefore R = 36.5 \text{ kN} \qquad \textbf{Ans.}$$

Angle between each rope and the sides of canal

$$\tan \theta_1 = \frac{T_1 \sin 50}{T_2 + T_1 \cos 50} = \frac{25 \sin 50}{15 + 25 \cos 50}$$

$$\theta_1 = 31.65^\circ \qquad \textbf{Ans.}$$

$$\theta_2 = 50 - \theta_1$$

$$\theta_2 = 18.35^\circ \qquad \textbf{Ans.}$$

Problem 4

Find the magnitude of forces F_1 and F_2 if they act at right angle, their resultant is $\sqrt{34}$ N. If they act at an angle 60°; their resultant is 7 N.

Solution

By parallelogram law we have

$$\text{Resultant } R = \sqrt{F_1^2 + F_2^2 + 2\,F_1F_2 \cos \theta}$$

$$\sqrt{34} = \sqrt{F_1^2 + F_2^2 + 2\,F_1F_2 \cos 90}$$

$$34 = F_1^2 + F_2^2 \qquad \text{..... (i)}$$

$$7 = \sqrt{F_1^2 + F_2^2 + 2\,F_1F_2 \cos 60}$$

$$49 = F_1^2 + F_2^2 + 2\,F_1F_2 \cos 60 \quad \text{.... (ii)}$$

Put equation (i) in (ii)

$$49 = 34 + 2\,F_1F_2 \cos 60$$

$$49 = 34 + F_1F_2$$

$$F_1F_2 = 15$$

$$\therefore \quad F_1 = \frac{15}{F_2} \qquad \text{..... (iii)}$$

Putting the value in equation (i) we get

$$34 = \left(\frac{15}{F_2}\right)^2 + F_2^2$$

$$34F_2^2 = F_2^4 + 225$$

$$F_2^4 - 34F_2^2 + 225 = 0$$

Solving quadratic equation, we get

$$F_2 = 5 \text{ N and } F_2 = 3 \text{ N}$$

From equation (iii), we get

$$\text{If } F_2 = 5 \text{ N then } F_1 = 3 \text{ N}$$

$$\text{If } F_2 = 3 \text{ N then } F_1 = 5 \text{ N}$$

Problem 5

Determine the resultant of the five coplanar concurrent forces acting at point O as shown in *figure 2.4(a)*.

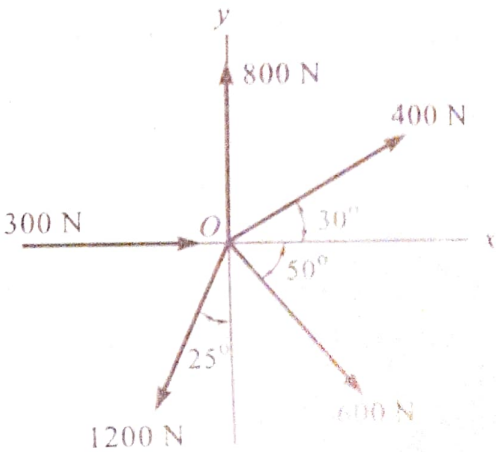

Fig. 2.4(a)

Solution

(i) $\Sigma F_x = 400 \cos 30 + 300 - 1200 \sin 25 + 600 \cos 50$

$\Sigma F_x = 524.94 \text{ N } (\rightarrow)$ ***Ans.***

(ii) $\Sigma F_y = 400 \sin 30 + 800 - 1200 \cos 25 - 600 \sin 50$

$\Sigma F_y = -547.19 \text{ N}$

$\therefore \Sigma F_y = 547.19 \text{ N } (\downarrow)$ ***Ans.***

(iii) Magnitude of resultant R

$$R = \sqrt{(\Sigma F_x)^2 + (\Sigma F_y)^2}$$

$$R = \sqrt{(524.94)^2 + (547.19)^2}$$

$$R = 758.27 \text{ N} \qquad \textbf{\textit{Ans.}}$$

(iv) Inclination of the resultant θ

$$\tan\theta = \frac{\Sigma F_y}{\Sigma F_x} \qquad \therefore \theta = \tan^{-1}\left(\frac{547.19}{524.94}\right)$$

$$\therefore \theta = 46.19^\circ \qquad \textbf{\textit{Ans.}}$$

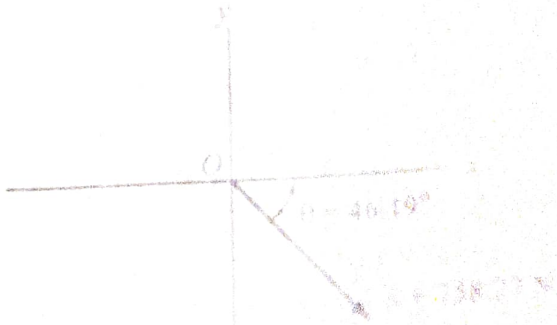
Fig. 2.4(b)

(v) Position of the resultant [Refer *figure 2.4(b)*]

$\because \Sigma F_x$ is +ve $(\rightarrow)$ and ΣF_y is −ve $(\downarrow)$

Resultant force R lies in IVth quadrant.

Problem 6

An eye bolt is being pulled from ground by three forces as shown in *figure 2.5(a)*. Determine the equilibrant on the eye bolt which resist to come out.

Note : The direction of force is defined by its slope.

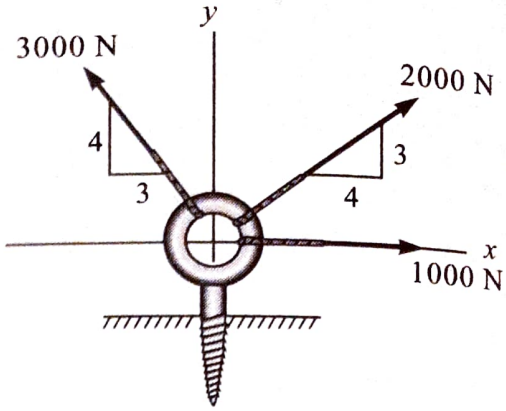

Fig. 2.5(a)

Solution

(i)

$\tan\theta_1 = \frac{3}{4}$ $\quad \therefore \theta_1 = 36.87^\circ$

(ii)

$\tan\theta_2 = \frac{4}{3}$ $\quad \therefore \theta_2 = 53.13^\circ$

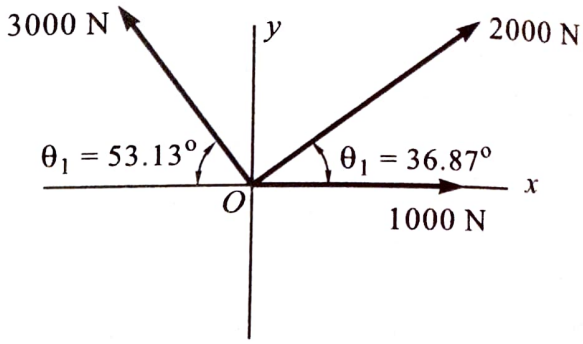

Fig. 2.5(b)

(iii) $\Sigma F_x = 1000 + 2000 \cos 36.87 - 3000 \cos 53.13$

$\therefore \Sigma F_x = 799.99 \approx 800 \text{ N } (\rightarrow)$ ***Ans.***

(iv) $\Sigma F_y = 2000 \sin 36.87 + 3000 \sin 53.13$

$\therefore \Sigma F_y = 3600 \text{ N } (\uparrow)$ ***Ans.***

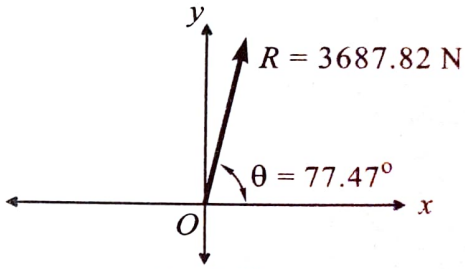

Fig. 2.5(c)

(v) Magnitude of resultant R

$$R = \sqrt{(800)^2 + (3600)^2}$$

$R = 3687.82$ N ***Ans.***

(vi) Inclination of the resultant θ

$$\theta = \tan^{-1}\left(\frac{3600}{800}\right)$$

$\therefore \theta = 77.47^\circ$ ***Ans.***

(vii) Position of the resultant [Refer *figure 2.5(c)*]

$\because \Sigma F_x$ is +ve $(\rightarrow)$ and ΣF_y is +ve $(\uparrow)$

$\therefore$ Resultant force R lies in Ist quadrant.

(viii) Since equilibrant is equal in magnitude, opposite in direction and collinear to that of resultant force.

$\therefore$ Equilibrant E lies in IIIrd quadrant. [Refer *figure 2.5(d)*]

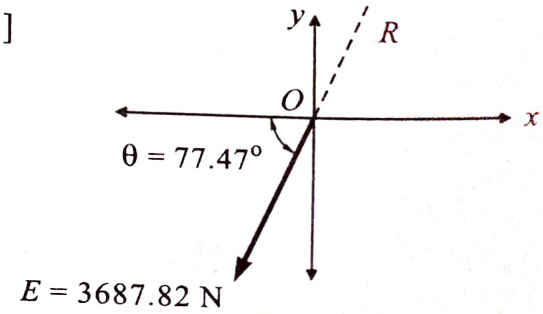

Fig. 2.5(d)

Ans.

Problem 7

The top end of vertical boot is connected by two cables having tension $T_1 = 500$ N and $T_2 = 1500$ N as shown in *figure 2.6(a)*. The third cable AB is used as a guy wire. Determine the tension in cable AB if resultant of the three concurrent forces acting at A is vertical. Also find the resultant.

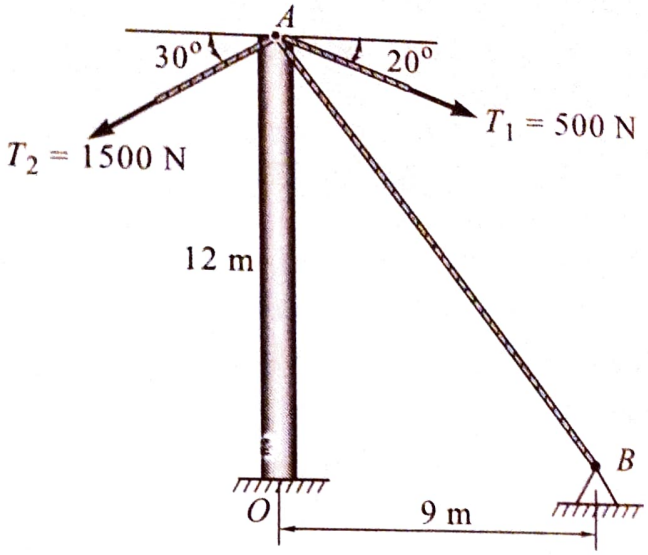

Fig. 2.6(a)

Solution

The *figure 2.6(b)* shows concurrent force system. The tension in cable AB (T_3) will try to exert a pull at A.

It is given that the resultant of the force system is vertical. It means that algebraic sum of all the force component in horizontal x-axis direction must be zero.

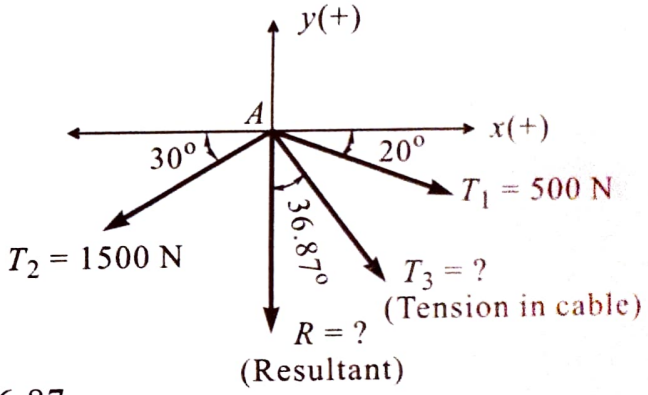

Fig. 2.6(b)

(i) $\therefore \Sigma F_x = 0$

$\therefore 500 \cos 20 - 1500 \cos 30 + T_3 \sin 36.87 = 0$

$\therefore T_3 = 1381.98$ N **Ans.**

(ii) $\because$ Resultant is vertical

$\therefore R = \Sigma F_y$

$\therefore R = -500 \sin 20 - 1500 \sin 30 - 1381.98 \cos 36.87$

$\therefore R = -2026.59$ N

$\therefore R = 2026.59$ N ($\downarrow$) **Ans.**

Problem 8

A ring is pulled by three forces as shown in *figure 2.7*. Find the force F and angle θ if resultant of these three forces is 100 N acting in vertical directions.

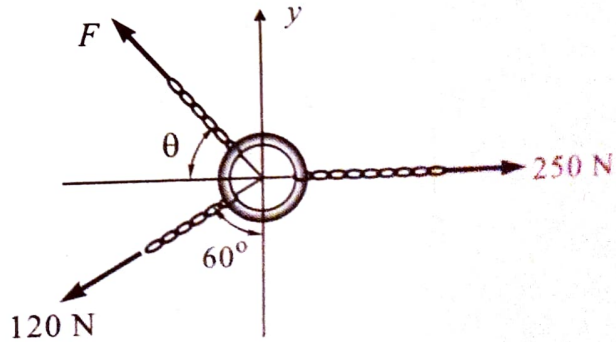

Fig. 2.7

Solution

(i) $\Sigma F_x = 0 = 250 - F \cos \theta - 120 \sin 60$

$F \cos \theta = 146.08$ ... (I)

(ii) $\Sigma F_y = 100 = F \sin \theta - 120 \cos 60$

$F \sin \theta = 160$ ... (II)

(iii) Solving equation (I) and (II) we get

$\theta = 47.6°$ and $F = 216.65$ N **Ans.**

Problem 9

A vessel is pulled by two tugboats. If the resultant of the forces exerted by the tugboats is a 5000 N force directed along the axis of the barge, determine **(i)** the tension in each of the ropes knowing that $\alpha = 45°$ **(ii)** the value of α for which the tension in rope 2 is minimum. Also find the corresponding tensions in the two ropes.

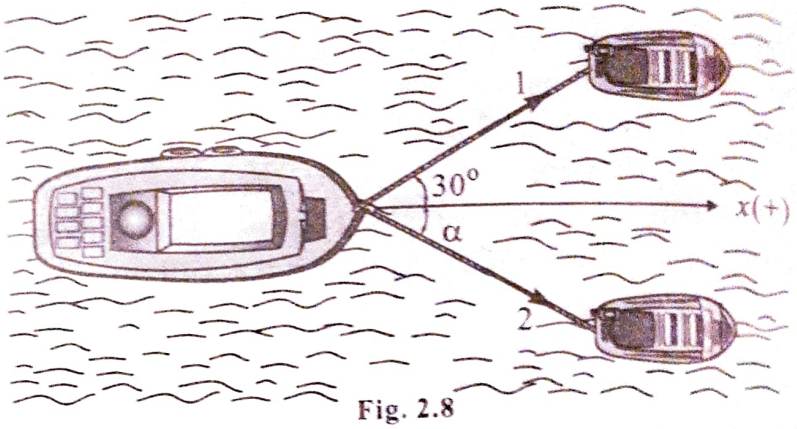

Fig. 2.8

Solution

The *figure 2.8* represents the top view of vessel pulled by two ropes connected to two locomotives.

Since the vessel is moving parallel to the bank, the resultant of the two tensile force in ropes must act along direction parallel to the bank i.e. x-direction.

(i) $\therefore \quad R_x = \Sigma F_x$

$$5000 = T_1 \cos 30 + T_2 \cos 45 \qquad \text{... (I)}$$

$$\Sigma F_y = 0$$

$$0 = T_1 \sin 30 - T_2 \sin 45 \qquad \text{... (II)}$$

Solving (I) and (II), we get

$$T_1 = 3660.25 \text{ N} \quad \text{and} \quad T_2 = 2588.19\text{N} \qquad \textbf{Ans.}$$

(ii) For the tension in rope 2 to be minimum, forces T_1 and T_2 should be perpendicular to each other.

$$\therefore \quad 30 + \alpha = 90 \qquad \therefore \quad \alpha = 60°$$

$$\therefore \quad R_x = \Sigma F_x$$

$$5000 = T_1 \cos 30 + T_2 \cos 60 \qquad \text{... (III)}$$

$$\Sigma F_y = 0$$

$$0 = T_1 \sin 30 - T_2 \sin 60 \qquad \text{... (IV)}$$

Solving (III) and (IV), we get

$$T_1 = 4330.13 \text{ N} \quad \text{and} \quad T_{2(\min)} = 2500\text{N} \qquad \textbf{Ans.}$$

Problem 10

Resultant of four concurrent forces shown in *figure 2.9* is zero. Find F_1 and F_2.

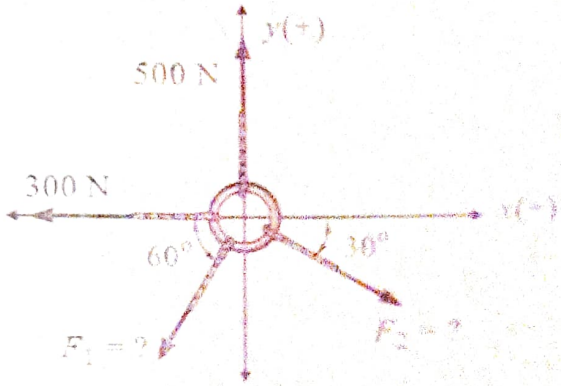

Fig. 2.9

Solution

(i) $\Sigma F_x = 0 = F_2 \cos 30 - F_1 \cos 60 - 300$

$$0.87 F_2 - 0.5 F_1 = 300 \qquad \text{... (I)}$$

(ii) $\Sigma F_y = 0 = 500 - F_1 \sin 60 - F_2 \sin 30$

$$0.5 F_2 + 0.87 F_1 = 500 \qquad \text{... (II)}$$

(iii) Solving equation (I) and (II) we get

$$F_1 = 283.05 \text{ N} \quad \text{and} \quad F_2 = 507.5 \text{ N} \qquad \textbf{Ans.}$$

Problem 11

A force $R = 25$ kN acting at O has three components F_A, F_B and F_C as shown in *figure 2.10(a)*. If $F_C = 20$ kN, find F_A and F_B.

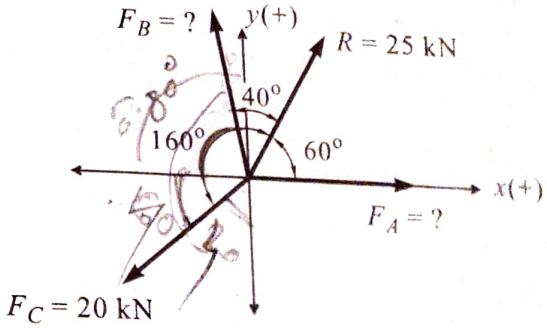

Fig. 2.10(a)

Solution

Refer *figure 2.10(b)*

(i) To find F_B

$$R_y = \Sigma F_y$$

$$\therefore 25 \sin 60 = F_B \sin 80 - 20 \sin 40$$

$$\therefore F_B = 35.04 \text{ kN} \quad \textbf{Ans.}$$

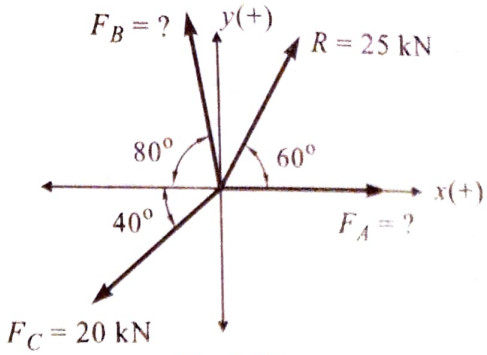

Fig. 2.10(b)

(ii) To find F_A

$$R_x = \Sigma F_x$$

$$\therefore 25 \cos 60 = F_A - 35.04 \cos 80 - 20 \cos 40$$

$$\therefore F_A = 33.91 \text{ kN} \quad \textbf{Ans.}$$

Problem 12

Find force F_4 completely so as to give the resultant of the system of forces as shown in the *figure 2.11(a)*.

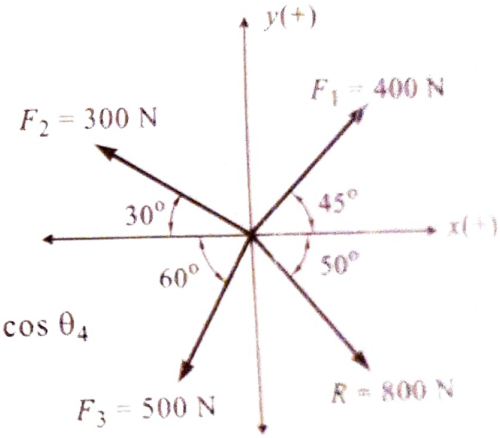

Fig. 2.11(a)

Solution

Assume F_4 in Ist quadrant making angle θ_4 with x-axis.

(i) $R_x = \Sigma F_x$

$$\therefore 800 \cos 50 = 400 \cos 45 - 300 \cos 30 - 500 \cos 60 + F_4 \cos \theta_4$$

$$\therefore F_4 \cos \theta_4 = 741.19 \text{ N } (\rightarrow) \qquad \ldots \text{(I)}$$

(ii) $R_y = \Sigma F_y$

$$-800 \sin 50 = 400 \sin 45 + 300 \sin 30 - 500 \sin 60 + F_4 \sin \theta_4$$

$$\therefore F_4 \sin \theta_4 = -612.66 \text{ N}$$

$$\therefore F_4 \sin \theta_4 = 612.66 \text{ N } (\downarrow) \qquad \ldots \text{(II)}$$

(iii) Dividing equation (II) by (I)

$$\therefore \tan \theta_4 = \frac{612.66}{741.19} \quad \therefore \theta_4 = 39.58^\circ \quad \textbf{Ans.}$$

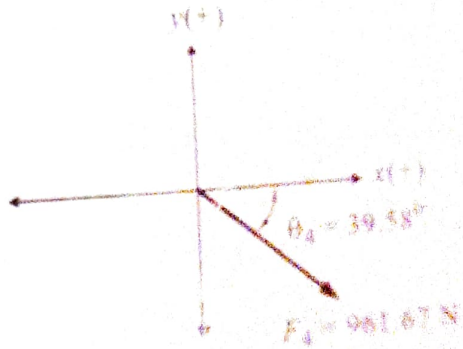

Fig. 2.11(b)

(iv) From equation (I) we get

$$F_4 = \frac{741.19}{\cos 39.58} \quad \therefore F_4 = 961.67 \text{ N} \quad \textbf{Ans.}$$

(v) Position of F_4 [Refer *figure 2.11(b)*]

Problem 13

Forces 7 kN, 10 kN, 10 kN and 3 kN respectively act at one of the angular point of regular pentagon toward the other four point taken in order. Find their resultant completely.

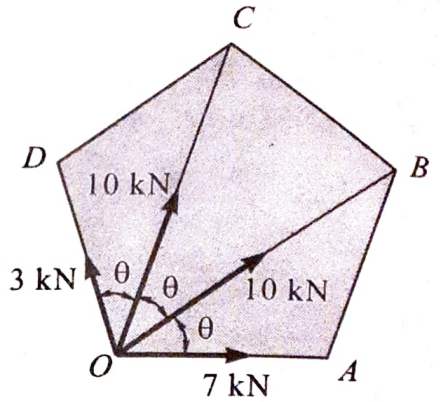

Fig. 2.12(a)

Solution

Regular pentagon is polygon having five sides of equal length. The point of intersection of two sides is called as angular point.

Therefore, pentagon has five angular points.

Refer *figure 2.12(a)*.

Included angles of any regular polygon

$$= 180 - \frac{360}{\text{Number of sides}}$$

For pentagon included angle

$$= 180 - \frac{360}{5} = 108^\circ$$

$$\therefore \theta = \frac{108}{3} = 36^\circ$$

Represent the concurrent forces as shown in *figure 2.12(b)*.

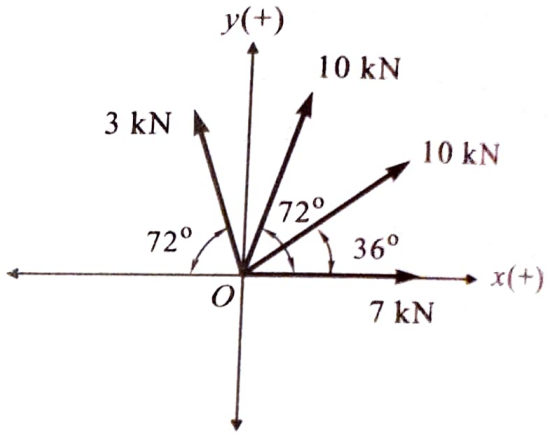

Fig. 2.12(b)

(i) $\Sigma F_x = 7 + 10 \cos 36 + 10 \cos 72 - 3 \cos 72$

$\Sigma F_x = 17.25 \text{ kN } (\rightarrow)$

(ii) $\Sigma F_y = 10 \sin 36 + 10 \sin 72 + 3 \sin 72$

$\Sigma F_y = 18.24 \text{ kN } (\uparrow)$

(iii) Magnitude of resultant R

$$R = \sqrt{(\Sigma F_x)^2 + (\Sigma F_y)^2}$$

$$R = \sqrt{(17.25)^2 + (18.24)^2}$$

$$R = 25.10 \text{ kN} \qquad \textbf{Ans.}$$

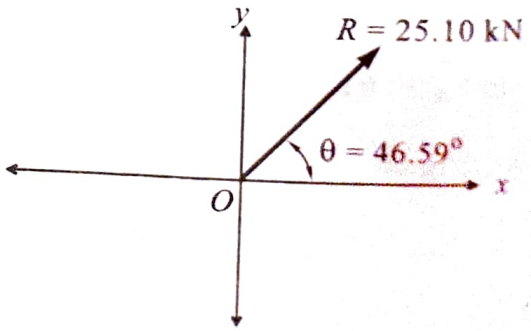

Fig. 2.12(c)

(iv) Inclination of the resultant θ

$$\theta = \tan^{-1}\left(\frac{\Sigma F_y}{\Sigma F_x}\right) \quad \therefore \theta = \tan^{-1}\left(\frac{18.24}{17.25}\right)$$

$$\therefore \theta = 46.59^\circ \qquad \textbf{Ans.}$$

(v) Position of the resultant is shown in *figure 2.12(c)*.

Problem 14

Determine the resultant of the three forces originating at point (3, –3) and passing through the point indicated : 126 N through (8, 6), 183 N through (2, –5) and 269 N through (–6, 3).

Solution

To find θ_1, θ_2 and θ_3.

$$\tan\theta = \left|\frac{y_2 - y_1}{x_2 - x_1}\right| \quad \text{(slope)}$$

$$\theta_1 = \tan^{-1}\left|\frac{9}{5}\right| \qquad \therefore \theta_1 = 60.95^\circ$$

$$\theta_2 = \tan^{-1}\left|\frac{-2}{-1}\right| \qquad \therefore \theta_2 = 63.44^\circ$$

$$\theta_3 = \tan^{-1}\left|\frac{6}{-9}\right| \qquad \therefore \theta_3 = 33.69^\circ$$

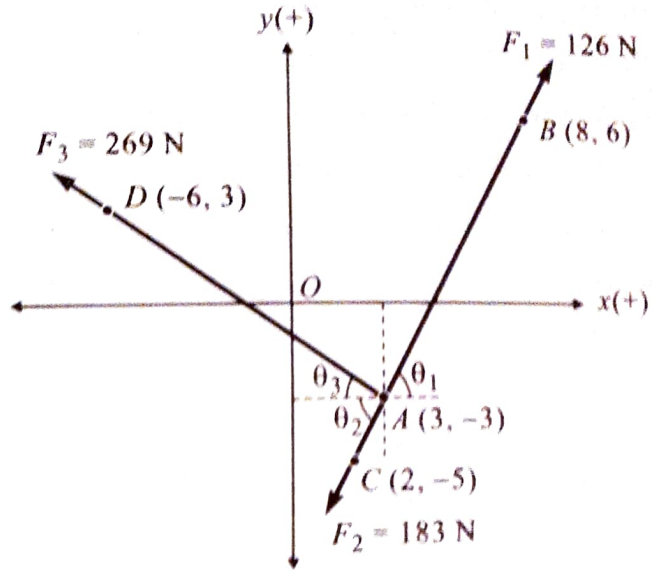

Fig. 2.13(a)

(i) $\Sigma F_x = 126\cos 60.95 - 183\cos 63.44 - 269\cos 33.69$

$\Sigma F_x = -244.47$ N

$\therefore \Sigma F_x = 244.47$ N (←)

(ii) $\Sigma F_y = 126\sin 60.95 - 183\sin 63.44 + 269\sin 33.69$

$\Sigma F_y = 95.68$ N (↑)

(iii) Magnitude of resultant R

$$R = \sqrt{(244.47)^2 + (95.68)^2}$$

$\therefore R = 262.53$ N **Ans.**

(iv) Inclination of the resultant θ

$$\theta = \tan^{-1}\left(\frac{95.68}{244.47}\right)$$

$\therefore \theta = 21.37^\circ$ **Ans.**

(v) Position of the resultant w.r.t. point A is as shown in *figure 2.13(b)*.

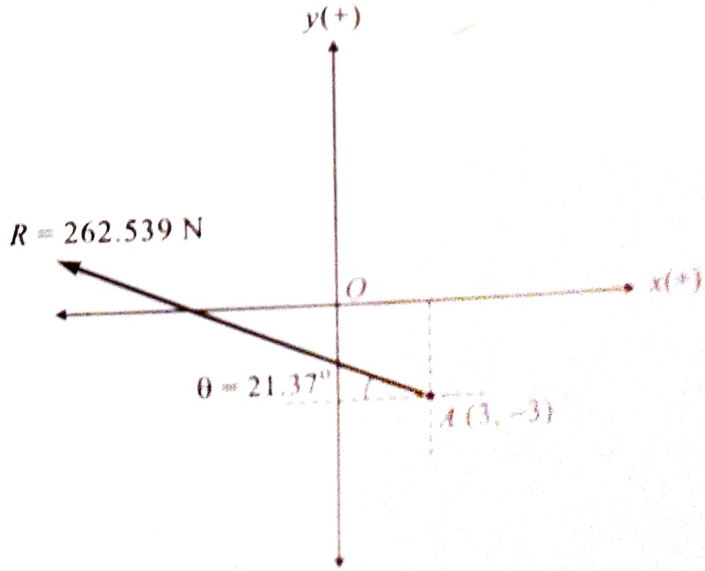

Fig. 2.13(b)

Problem 15

A body is acted upon by forces as below. Find the resultant of these forces.

(i) 50 N acting due East

(ii) 100 N 50° North of East

(iii) 75 N 20° West of North

(iv) 120 N acting 30° South of West

(v) 90 N acting 25° West of South

(vi) 80 N acting 40° South of East

All forces are acting from the point O.

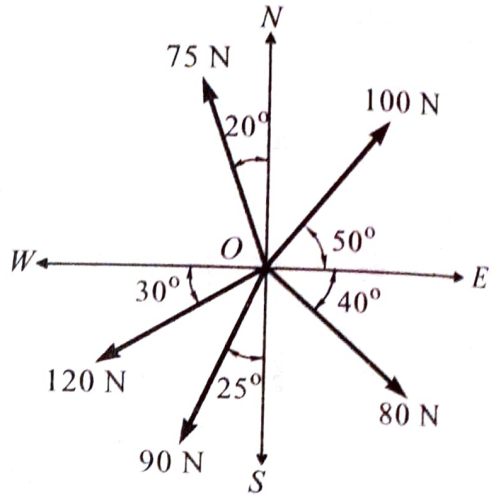

Fig. 2.14(a)

Solution

Draw the sketch of all forces acting at point O

Show geographical axis North (N), South (S), East (E) and West (W). [*figure 2.14(a)*]

(50° North of East means measure an angle of 50° from East toward North. So please follow the similar guide line for all forces)

(i) $\Sigma F_x = 50 + 100 \cos 50 - 75 \sin 20 - 120 \cos 30 - 90 \sin 25 + 80 \cos 40$

$\therefore \Sigma F_x = 7.95 \text{ N } (\rightarrow)$ **Ans.**

(ii) $\Sigma F_y = 100 \sin 50 + 75 \cos 20 - 120 \sin 30 - 90 \cos 25 - 80 \sin 40$

$\Sigma F_y = -45.91 \text{ N}$

$\therefore \Sigma F_y = 45.91 \text{ N } (\downarrow)$ **Ans.**

(iii) $R = \sqrt{(7.95)^2 + (45.91)^2}$

$R = 46.59 \text{ N}$ **Ans.**

(iv) $\theta = \tan^{-1}\left(\frac{45.91}{7.95}\right)$

$\therefore \theta = 80.18°$ **Ans.**

(v) Position of the resultant w.r.t point O is as shown in *figure 2.14(b)*.

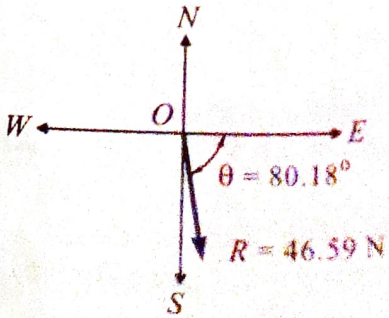

Fig. 2.14(b)

Problem 16

Three coplanar forces act at a point on a bracket as shown in *figure 2.15*. Determine the value of the angle α such that the resultant of the three forces will be vertical. Also find the magnitude of the resultant

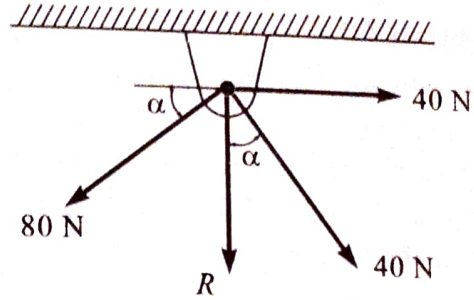

Fig. 2.15

Solution

(i) As the resultant is vertical

$$\therefore \Sigma F_x = 0$$

$$\therefore 40 + 40 \sin \alpha - 80 \cos \alpha = 0$$

$$1 + \sin \alpha - 2 \cos \alpha = 0$$

$$\sin \alpha = 2 \cos \alpha - 1 \qquad \ldots (I)$$

(ii) Squaring both the sides of equation (I)

$$\therefore \sin^2 \alpha = 4 \cos^2 \alpha - 4 \cos \alpha + 1$$

$$\therefore 1 - \cos^2 \alpha = 4 \cos^2 \alpha - 4 \cos \alpha + 1$$

$$\therefore 5 \cos^2 \alpha - 4 \cos \alpha = 0$$

$$\therefore \cos \alpha (5 \cos \alpha - 4) = 0$$

$$\therefore \cos \alpha = 0 \text{ or } \cos \alpha = \frac{4}{5}$$

$$\therefore \alpha = 90^\circ \text{ or } \alpha = 36.87^\circ$$

From *figure 2.46* $\alpha = 36.87^\circ$ **Ans.**

(iii) $\because$ Resultant is vertical

$$\therefore R = \Sigma F_y$$

$$\therefore R = -40 \cos 36.87 - 80 \sin 36.87$$

$$\therefore R = -80 \text{ N} \quad \therefore R = 80 \text{ N } (\downarrow)$$ **Ans.**

Problem 17

To move a boat uniformly along th river at a given speed a resultant force $R = 520$ N is required. Two men pulling with force P and Q by means of ropes to do this. The ropes makes an angle of $30°$ and $40°$ respectively with the sides of the river as shown in *figure 2.16*. **(i)** Determine the force P and Q. **(ii)** If $\theta_1 = 30°$, find the value of θ_2 such that the force in the rope Q is minimum. What is the minimum force Q ?

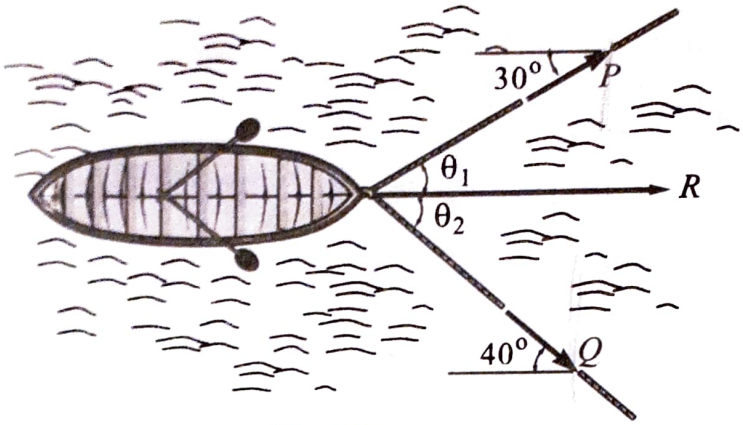

Fig. 2.16

Solution

(i) $R_x = \Sigma F_x$

$520 = P \cos 30 + Q \cos 40$

$520 = 0.866\, P + 0.766\, Q$ ... (I)

$\Sigma F_y = 0$

$0 = P \sin 30 - Q \sin 40$

$0 = 0.5\, P - 0.6428\, Q$ ... (II)

Solving (I) and (II), we get

$P = 355.7$ N and $Q = 276.68$ N ***Ans.***

(ii) For the force Q to be minimum, force P and Q should be perpendicular to each other.

$\theta_1 + \theta_2 = 90°$ ($\theta_1 = 30°$ given)

$\therefore \theta_2 = 60°$

$R_x = \Sigma F_x$

$520 = P \cos 30 + Q_{min} \cos 60$

$520 = 0.866\, P + 0.5\, Q_{min}$ ... (III)

$\Sigma F_y = 0$

$0 = P \sin 30 - Q_{min} \sin 60$

$0 = 0.5\, P - 0.866\, Q_{min}$ ... (II)

Solving (III) and (IV), we get

$Q_{min} = 260$ N ***Ans.***

Problem 18

Under the action of four forces the following system in *figure 2.17(a)* is in equilibrium. Determine the fifth force.

Solution

For equilibrium condition, we have

$$\Sigma F_x = 0 \quad \text{and} \quad \Sigma F_y = 0$$

Assume the fifth force F_5 is in the Ist quadrant making an angle θ with +ve x-axis.

$$\Sigma F_x = 0$$

$$\Rightarrow 18 + 22.5 \cos 45 - 30 \cos 30 + F_5 \cos\theta = 0$$

$$F_5 \cos\theta = -7.93 \text{ N}$$

$$\therefore F_5 \cos\theta = 7.93 \text{ N } (\leftarrow) \qquad \text{... (I)}$$

Now, $\Sigma F_y = 0$

$$\Rightarrow 15 + 22.5 \sin 45 - 30 \sin 30 + F_5 \sin\theta = 0$$

$$F_5 \sin\theta = -15.91 \text{ N}$$

$$\therefore F_5 \sin\theta = 15.91 \text{ N } (\downarrow) \qquad \text{... (II)}$$

Equation (II) ÷ (I), we get

$$\tan\theta = \frac{15.91}{7.93} \quad \therefore \theta = 63.51^\circ \textbf{ Ans.}$$

From equation (I), we get

$$F_5 = 17.78 \text{ N} \qquad \textbf{Ans.}$$

Position of resultant w.r.t. origin O.

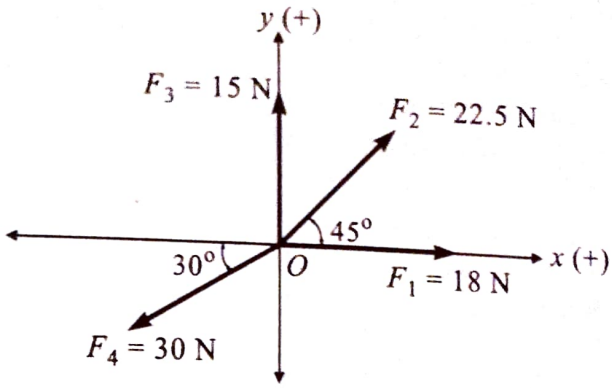

Fig. 2.17(a)

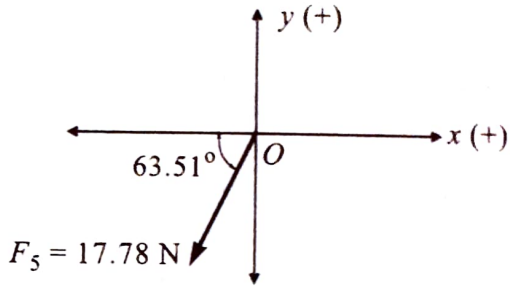

Fig. 2.17(b)

Problem 19

Determine the magnitude and direction of forces F_1 and F_2, shown in *figure 2.18* when the resultant of the given force system is found to be 800 N along positive x-axis.

Solution

(i) $\Sigma F_x = 800$

$$F_2 - 290 \cos 36 - 370 \cos 70 = 800$$

$$F_2 = 1161.2 \text{ N } (\rightarrow) \qquad \textbf{Ans.}$$

(ii) $\Sigma F_y = 0$

$$F_1 + 290 \sin 36 - 370 \sin 70 = 0$$

$$F_1 = 177.23 \text{ N } (\uparrow) \qquad \textbf{Ans.}$$

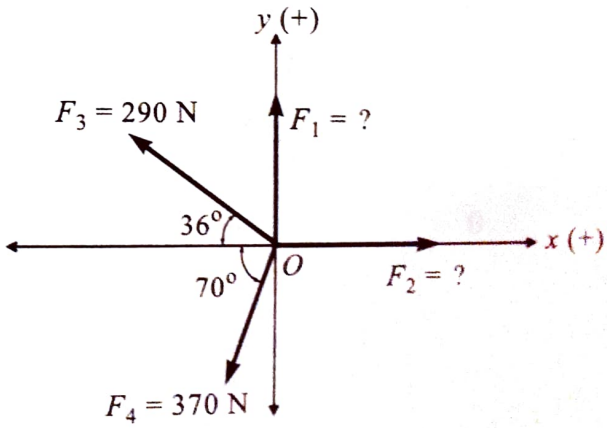

Fig. 2.18

Problem 20

The striker of carom board laying on the board is being pulled by four players as shown in *figure 2.19(a)*. The players are sitting exactly at the centre of the four sides. Determine the resultant of forces in magnitude and direction.

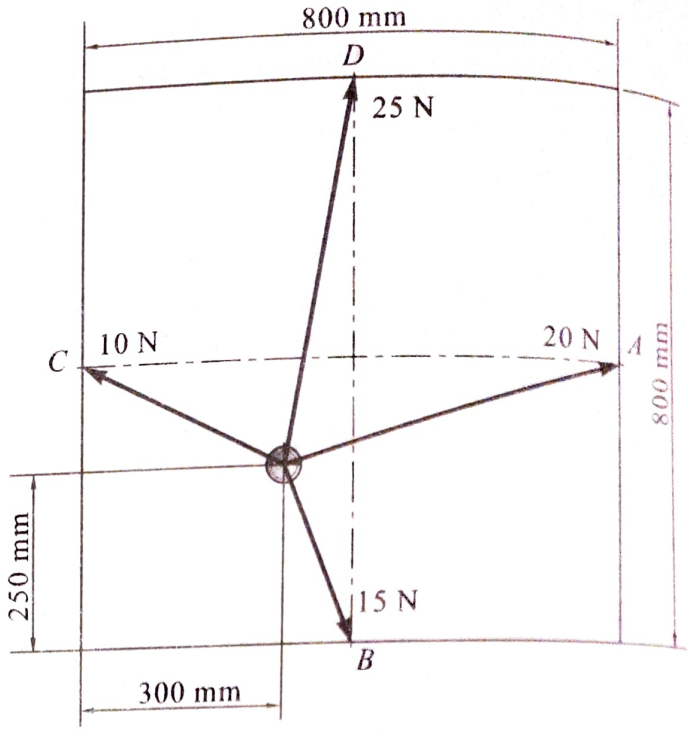

Fig. 2.19(a)

Solution

(i) $\tan\theta_1 = \dfrac{150}{500}$ $\quad \therefore \theta_1 = 16.7^\circ$

$\tan\theta_2 = \dfrac{550}{100}$ $\quad \therefore \theta_2 = 79.7^\circ$

$\tan\theta_3 = \dfrac{150}{300}$ $\quad \therefore \theta_2 = 26.56^\circ$

$\tan\theta_4 = \dfrac{250}{100}$ $\quad \therefore \theta_2 = 68.2^\circ$

(ii) $\Sigma F_x = 20\cos\theta_1 + 25\cos\theta_2 - 10\cos\theta_3 + 15\cos\theta_4$

$\Sigma F_x = 20.25\text{ N}\ (\rightarrow)$

(iii) $\Sigma F_y = 20\sin\theta_1 + 25\sin\theta_2 + 10\sin\theta_3 - 15\sin\theta_4$

$\therefore \Sigma F_y = 20.89\text{ N}\ (\uparrow)$

(iv) $R = \sqrt{(20.25)^2 + (20.89)^2}$

$\therefore R = 29.09\text{ N}$ ***Ans.***

(v) $\theta = \tan^{-1}\left(\dfrac{20.89}{20.25}\right)$

$\therefore \theta = 45.89^\circ$ ***Ans.***

(vi) Position of resultant R is as shown in *figure 2.58(c)*.

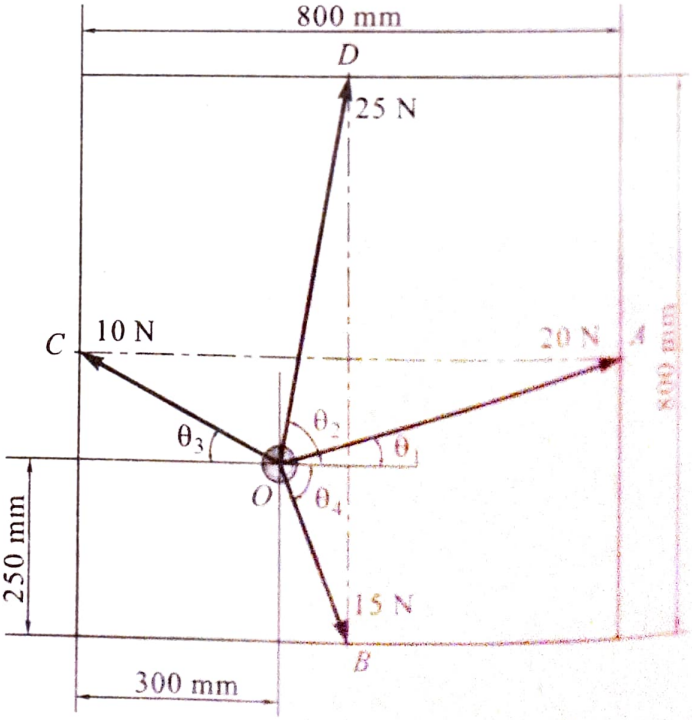

Fig. 2.19(b)

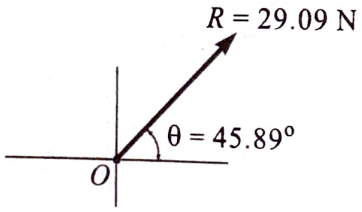

Fig. 2.19(c)

2.3 Varignon's Theorem

It states that *the moment of resultant of all the forces in a plane about any point is equal to the algebraic sum of moment of all the forces about the same point.*

Simple Case to Prove : The moment of a force in a plane about any point is equal to the sum of the moments of components of the force about the same point.

$$R \times d = P \times d_1 + Q \times d_2$$

Proof : Consider a force R acting at a point O. Say P and Q are the resolved components of force R (as shown in *figure 2.20*). Let R, P and Q form an angle θ, θ_1, θ_2 respectively with x-axis.

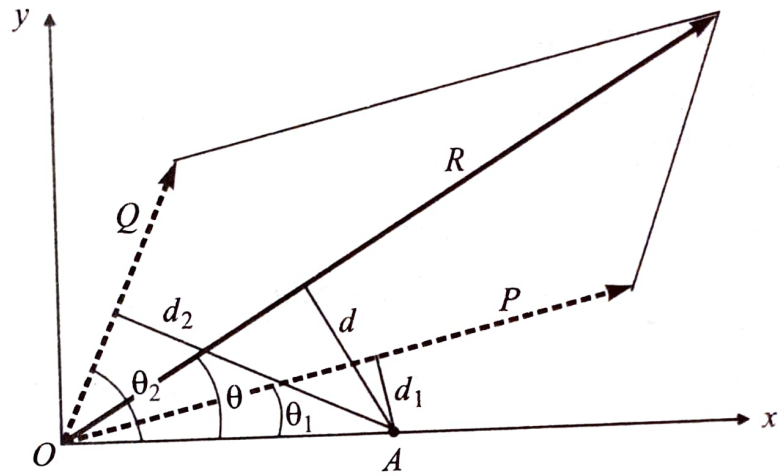

Fig. 2.20

The moment of R about an arbitrary point A is $R \times d$ where d is perpendicular distance from A to the line of action of R. Similarly the moment of P and Q about point A are $P \times d_1 + Q \times d_2$ respectively, where d_1 and d_2 are perpendicular distance from A to the line of action of P and Q.

Since R is the resultant of P and Q, it follows that the sum $P_y + Q_y$ of the y component of two forces P and Q is equal to the y component R_y of their resultant R.

$$\text{i.e. } R_y = P_y + Q_y$$

$$R_y = R \sin\theta, \quad P_y = P \sin\theta_1 \quad \text{and} \quad Q_y = Q \sin\theta_2$$

$$\therefore R \sin\theta = P \sin\theta_1 + Q \sin\theta_2$$

Multiplying both sides by length OA

$$R \times OA \sin\theta = P \times OA \sin\theta_1 + Q \times OA \sin\theta_2$$

$$\text{But } OA \sin\theta = d, \; OA \sin\theta_1 = d_1 \text{ and } OA \sin\theta_2 = d_2$$

$$\therefore R \times d = P \times d_1 + Q \times d_2$$ **Hence Proved**

Note : Varignon's theorem is used for determining the *position of resultant of parallel and general force system.*

2.4 Resultant of Parallel Force System

Procedure

Step 1 : Find resultant $R = \Sigma F$

Take the algebraic sum of all the parallel forces considering proper sign convention. (+ve↑ / –ve ↓)

Step 2 : Find ΣM_O

Take the algebraic sum moment of forces about a point (say O) considering proper sign convention (+ve ↺ / –ve ↻)

Step 3 : Apply Varignon's theorem

$\Sigma M_O = R \times d$ (where d is the perpendicular distance between line of action of R and reference point O)

Step 4 : Position of resultant w.r.t. point O.

Resultant may lie to the right or left of the reference point O at a distance d, depending on sign of ΣF and ΣM_O.

(i) ΣF ↑ and ΣM_O (+ve ↺)

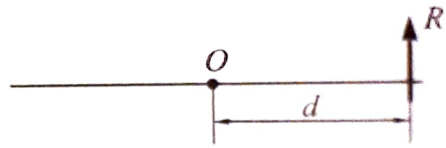

(ii) ΣF ↓ and ΣM_O (+ve ↺)

(iii) ΣF ↑ and ΣM_O (–ve ↻)

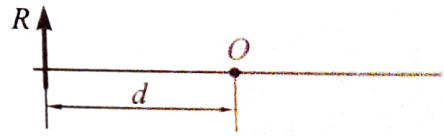

(iv) ΣF ↓ and ΣM_O (–ve ↻)

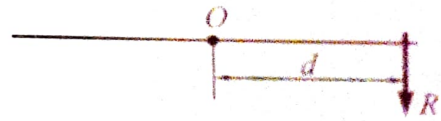

Note : Resultant of parallel force system may be

(i) Only a single resultant force R (Translational motion)

(ii) Only a single resultant couple M (Rotational motion)

(iii) Both, a single resultant force R and a single resultant couple M (Translational and rotational motion together)

2.4.1 Solved Problems

Problem 21

Determine the resultant of the following system of parallel forces shown in *figure 2.21(a)* and locate the same.

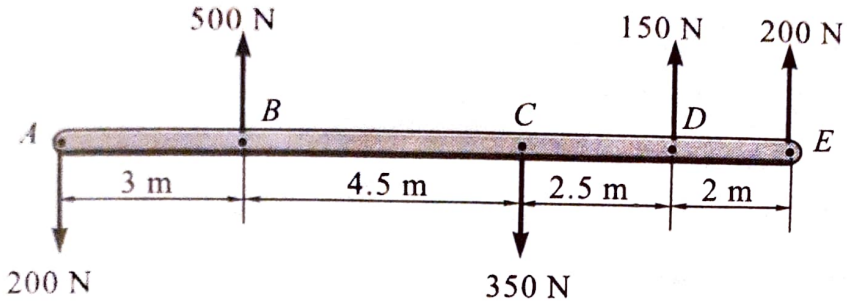

Fig. 2.21(a)

Solution

(i) $R = \Sigma F = -200 + 500 - 350 + 150 + 200$

$= -200 + 500 - 350 + 150 + 200$

$R = 300 \text{ N } (\uparrow)$ ***Ans.***

(ii) $\Sigma M_A = 500 \times 3 - 350 \times 7.5 + 150 \times 10 + 200 \times 12$

$\Sigma M_A = 2775 \text{ N-m } (\circlearrowleft)$ ***Ans.***

(iii) Applying Varignon's theorem, we have

$\Sigma M_A = R \times d$

$\therefore 2775 = 300 \times d$

$\therefore d = 9.25 \text{ m}$ ***Ans.***

(v) Position of the resultant w.r.t. point A is as shown in *figure 2.21(b)*.

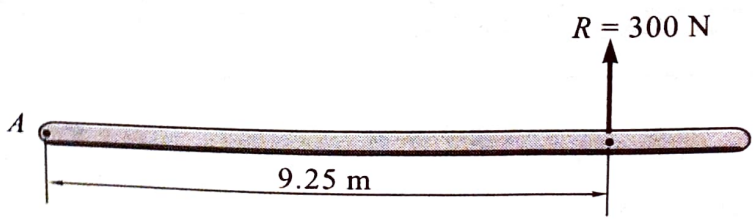

Fig. 2.21(b)

Problem 22

Find the resultant of following force system and also find the equivalent force and couple at point A of the same force system shown in *figure 2.22(a)*.

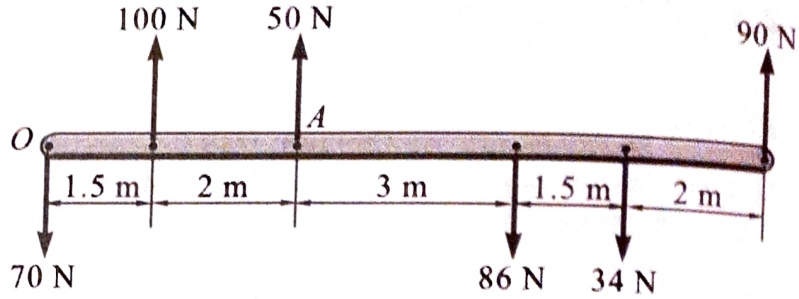

Fig. 2.22(a)

Solution

Case (I)

(i) $R = \Sigma F = -70 + 100 + 50 - 86 - 34 + 90$

$\therefore R = 50 \text{ N } (\uparrow)$ ***Ans.***

(ii) $\Sigma M_O = 100 \times 1.5 + 50 \times 3.5 - 86 \times 6.5 - 34 \times 8 + 90 \times 10$

$\therefore \Sigma M_O = 394 \text{ N-m } (\circlearrowleft)$ ***Ans.***

(iii) Applying Varignon's theorem, we have

$\Sigma M_O = R \times d$

$\therefore d = \dfrac{\Sigma M_O}{R} = \dfrac{394}{50}$

$\therefore d = 7.88 \text{ m}$ ***Ans.***

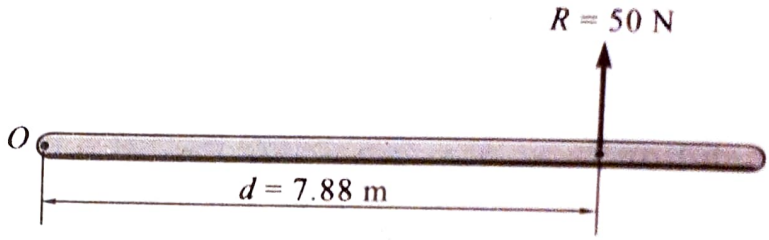

Fig. 2.22(b)

(v) Position of the resultant w.r.t. point O is as shown in *figure 2.22(b)*.

Case (II)

(i) $R = \Sigma F = -70 + 100 + 50 - 86 - 34 + 90$

$\therefore R = 50 \text{ N } (\uparrow)$ ***Ans.***

(ii) $\Sigma M_A = 70 \times 3.5 - 100 \times 2 - 86 \times 3 - 34 \times 4.5 + 90 \times 6.5$

$\therefore \Sigma M_A = 219 \text{ N-m } (\circlearrowleft)$ ***Ans.***

(iii) Equivalent force and couple at point A of the force system is a single force $R = 50 \text{ N } (\uparrow)$ and a couple $C = \Sigma M_A = 219 \text{ N-m } (\circlearrowleft)$ shown in *figure 2.22(c)*.

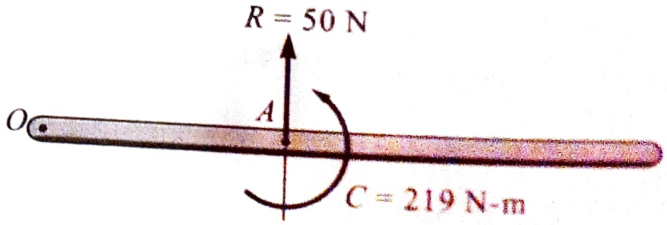

Fig. 2.22(c)

Ans.

Case (II) : Alternate Method

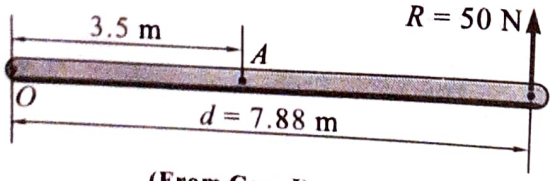

(From Case I)

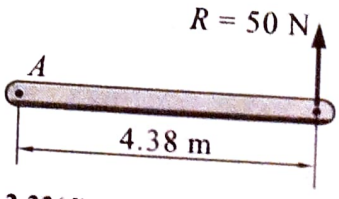

Fig. 2.22(d)

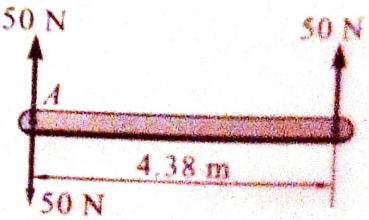

$\therefore$ Equivalent force and couple at point A = ($C = 50 \times 4.38 = 219$ N-m)

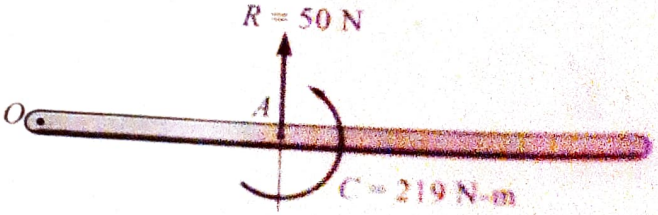

Fig. 2.22(e)

Ans.

Problem 23

Find the resultant of following force system shown in *figure 2.23*.

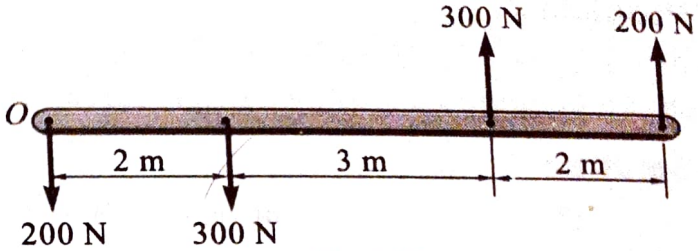

Fig. 2.23

Solution

(i) $R = \Sigma F = -200 - 300 + 300 + 200$

$\therefore R = 0$

$\therefore$ The resultant force $R = 0$ ***Ans.***

$\because$ The resultant force is zero, the resultant may be a couple.

(ii) To find the value of couple take moment of all forces about point O

$\Sigma M_O = -300 \times 2 + 300 \times 5 + 200 \times 7$

$\therefore \Sigma M_O = 2300$ N-m (↺) ***Ans.***

(iii) Here the resultant of given force system is a couple of 2300 N-m (↺) and resultant force is zero.

Problem 24

Replace the force system acting on a bar as shown in *figure 2.24(a)* by a single force.

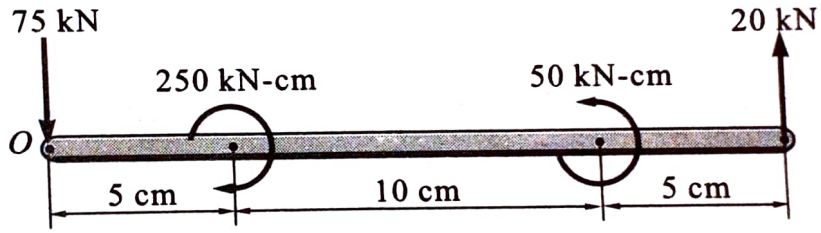

Fig. 2.24(a)

Solution

(i) $R = \Sigma F = -75 + 20$

$R = -55$ kN

$R = 55$ kN (↓) ***Ans.***

(ii) $\Sigma M_O = -250 + 50 + 20 \times 20$

$\Sigma M_O = 200$ kN cm (↺) ***Ans.***

(iii) Applying Varignon's theorem

$\Sigma M_O = R \times d$

$$\therefore d = \frac{\Sigma M_O}{R} = \frac{200}{55}$$

$\therefore d = 3.64$ cm ***Ans.***

(iv) Position of resultant w.r.t. point O is as shown in *figure 2.24(b)*.

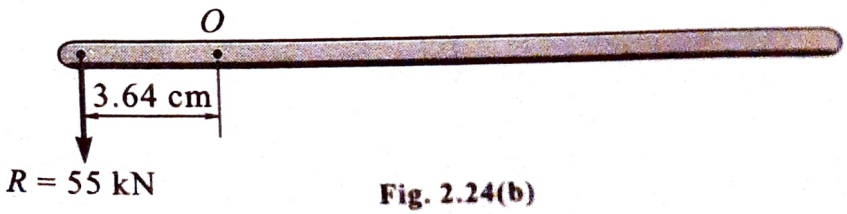

Fig. 2.24(b)

Problem 25

Replace the force system acting on a bar as shown in *figure 2.25(a)* by a single force.

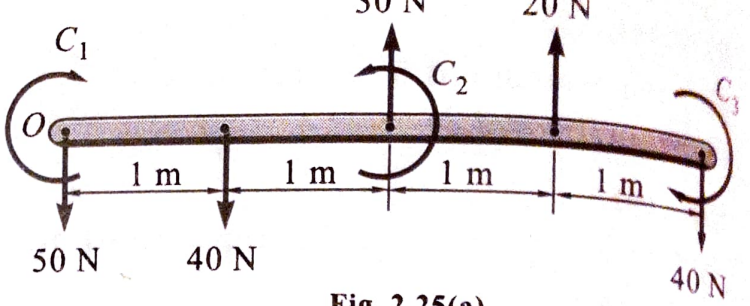

Fig. 2.25(a)

$C_1 = 85$ N-m
$C_2 = 65$ N-m
$C_3 = 90$ N-m

Solution

(i) $R = \Sigma F = -50 - 40 + 30 + 20 - 40$

$R = -80$ N

$R = 80$ N (↓) **Ans.**

(ii) $\Sigma M_O = -40 \times 1 + 30 \times 2 + 20 \times 3 - 40 \times 4 - 85 + 65 - 90$

$\Sigma M_O = -190$ N-m $\therefore \Sigma M_O = 190$ N-m (↺) **Ans.**

(iii) Applying Varignon's theorem

$\Sigma M_O = R \times d$

$\therefore d = \dfrac{\Sigma M_O}{R} = \dfrac{190}{80}$

$\therefore d = 2.375$ m **Ans.**

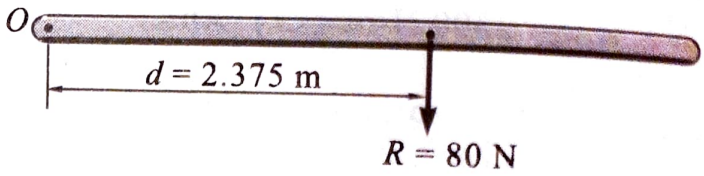

Fig. 2.25(b)

(iv) Position of resultant w.r.t. point O is shown in *figure 2.25(b)*.

Problem 26

Find the resultant of given active forces [*figure 2.26(a)*] w.r.t. point B.

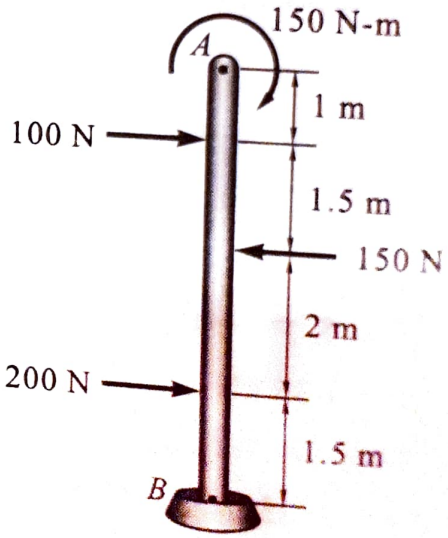

Fig. 2.26(a)

Solution

(i) $R = \Sigma F = 100 - 150 + 200$

$\therefore R = 150$ N (→) **Ans.**

(ii) $\Sigma M_B = -150 - 100 \times 5 + 150 \times 3.5 - 200 \times 1.5$

$\Sigma M_B = -425$ N-m

$\Sigma M_B = 425$ N-m (↻) **Ans.**

(iii) By Varignon's theorem, we have

$\Sigma M_B = R \times h$

$\therefore h = \dfrac{425}{150}$

$\therefore h = 2.83$ m **Ans.**

Position of resultant w.r.t. point B is as shown in *figure 2.26(b)*.

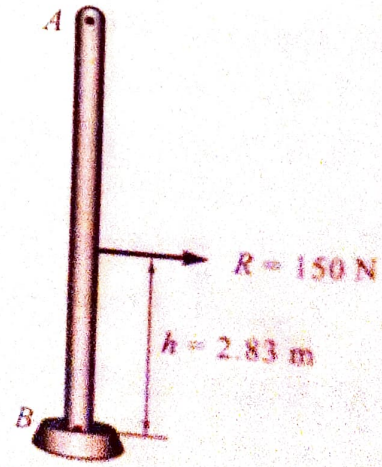

Fig. 2.26(b)

Problem 27

Resolve the three parallel forces as shown in *figure 2.27(a)* with two forces. What is the third force ?

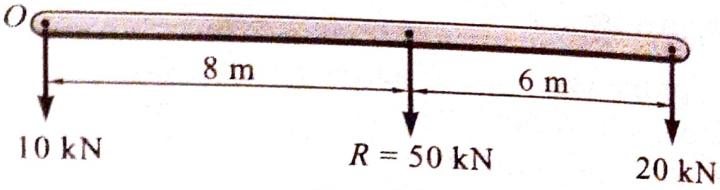

Fig. 2.27(a)

Solution

Given : $R = 50$ kN (↓)

To find : $F_3 = ?$ and $d = ?$

Refer *figure 2.27(b)*

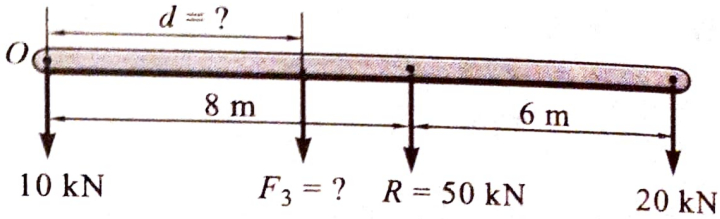

Fig. 2.27(b)

(i) $R = \Sigma F_y = -10 - 20 - F_3$

$-50 = -30 - F_3$

$F_3 = 20$ kN (↓) **Ans.**

(ii) By Varignon's theorem, we have

$\Sigma M_O = F_3 \times d + 20 \times 14$

$50 \times 8 = 20 \times d + 280$

$d = 6$ m **Ans.**

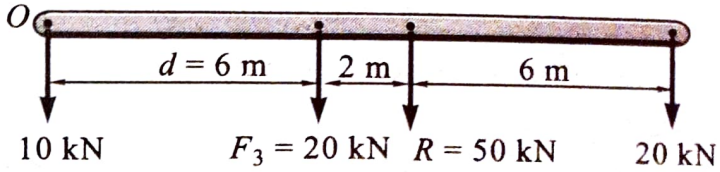

Fig. 2.27(c)

(iii) Position of F_3 w.r.t. point O [*figure 2.27(c)*].

Problem 28

Resolve the force $F = 900$ N acting at B as shown in *figure 2.28(a)* into parallel component at O and A.

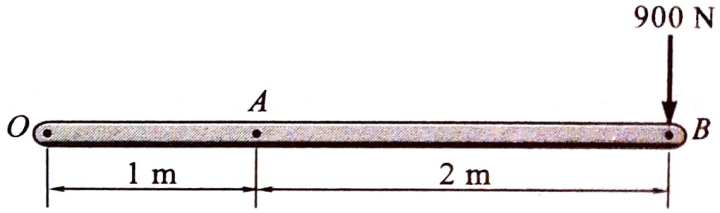

Fig. 2.28(a)

Solution

(i) Assume F_1 and F_2 as the parallel component of forces acting vertical at O and A respectively as shown in *figure 2.28(b)*.

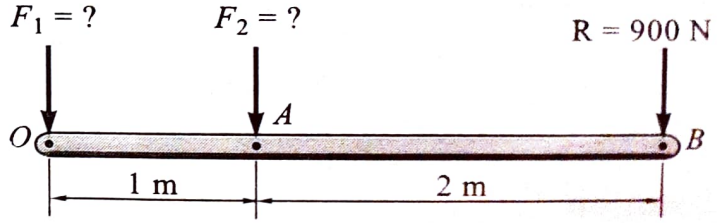

Fig. 2.28(b)

(ii) Taking moment about O and applying Varignon's theorem we have

$-900 \times 3 = F_1 \times 0 - F_2 \times 1$

$F_2 = 2700$ N(↓)

(iii) Taking moment about A and applying Varignon's theorem we have

$-900 \times 2 = F_1 \times 1 + F_2 \times 0$

$F_1 = -1800$ N (–ve sign indicates wrong assumed direction)

$F_1 = 1800$ N (↑)

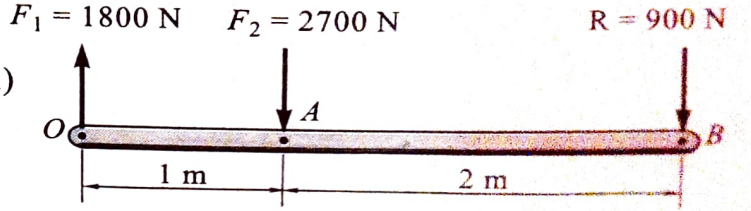

Fig. 2.28(c)

(iv) Position of F_1 and F_2. [*figure 2.28(c)*].

Problem 29

Find the resultant of active forces only shown in *figure 2.29(a)* and show its position w.r.t. point *A*.

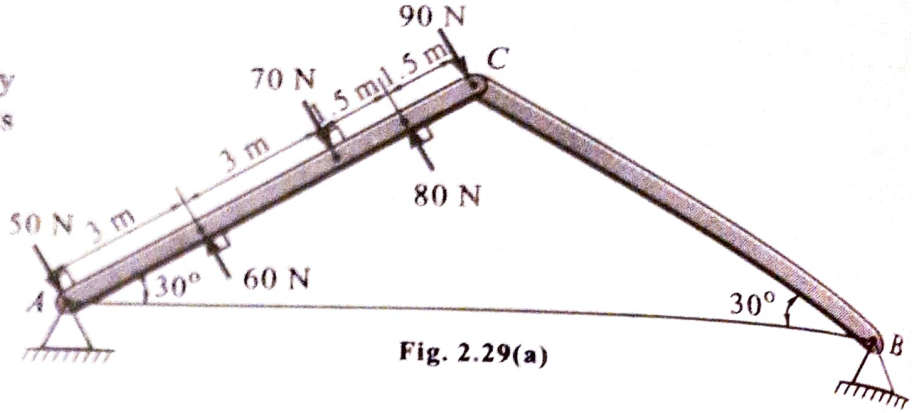

Fig. 2.29(a)

Solution

(i) $R = -50 + 60 - 70 + 80 - 90$

$R = -70$

$R = 70\text{ N}\ (\nwarrow 60°)$

(ii) $\Sigma M_A = 60 \times 3 - 70 \times 6 + 80 \times 7.5 - 90 \times 9$

$\Sigma M_A = -450\text{ N-m}$

$\Sigma M_A = 450\text{ N-m}(\circlearrowleft)$ **Ans.**

(iii) By Varignon's theorem, we have

$\Sigma M_A = R \times d$

$d = \dfrac{\Sigma M_A}{d} = \dfrac{450}{70}$

$d = 6.429\text{ m}$ **Ans.**

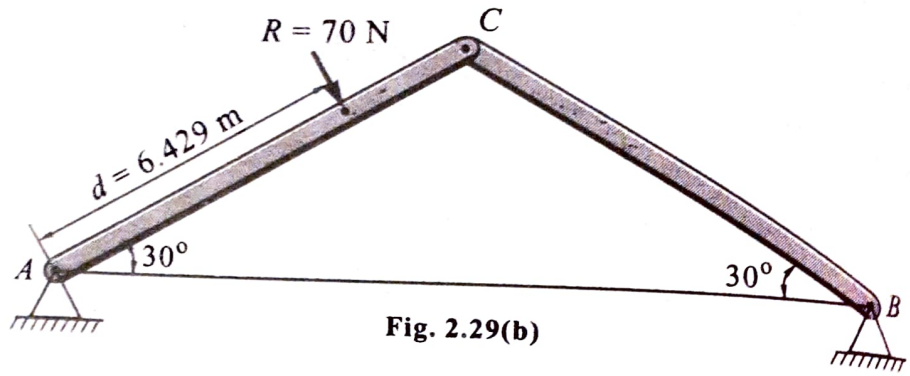

Fig. 2.29(b)

(iv) Position of resultant w.r.t. point *A* [*figure 2.29(b)*].

Problem 30

A part roof truss is acted by wind and other forces as shown in *figure 2.30(a)* All the forces from a parallel force system and are perpendicular to portion *AB* of the truss. Find the resultant of the force and its location w.r.t. hinge *A*.

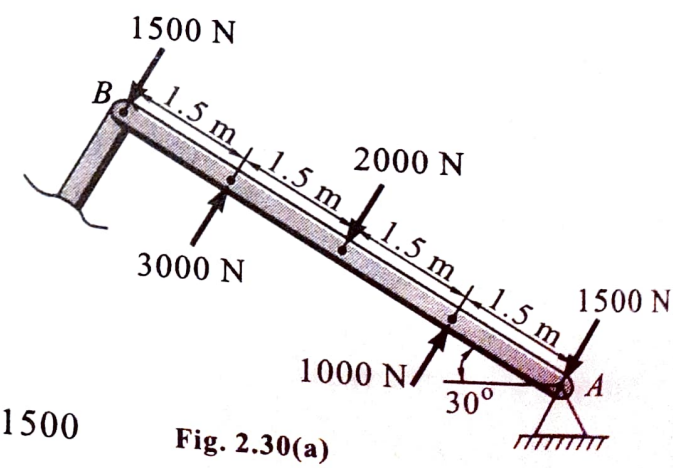

Fig. 2.30(a)

Solution

(i) $R = \Sigma F = -1500 + 1000 - 2000 + 3000 - 1500$

$R = -1000$

$R = 1000\text{ N}\ (\swarrow 60°)$

(ii) $\Sigma M_A = 1500 \times 6 - 3000 \times 4.5 + 2000 \times 3 - 1000 \times 1.5$

$\Sigma M_A = 0$

(iii) By Varignon's theorem, we have

$\Sigma M_A = R \times d$

$\therefore d = 0$ **Ans.**

(iv) Position of Resultant $R = 1000$ N acts at hinge A [*figure 2.30(b)*].

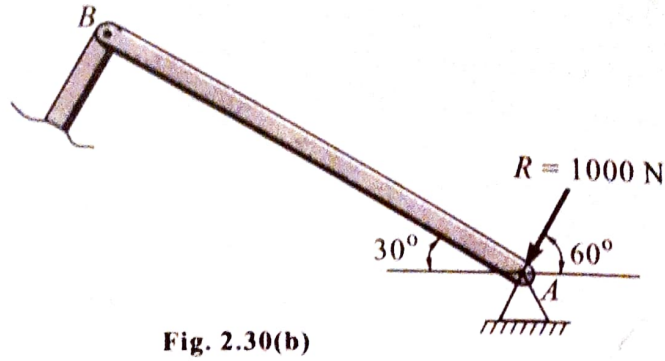

Fig. 2.30(b)

Problem 31

Find the resultant of force system shown in *figure 2.31(a)* at point A.

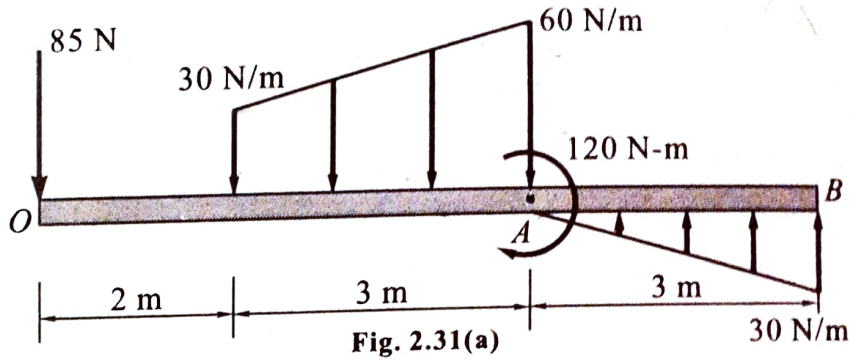

Fig. 2.31(a)

Solution

Refer *figure 2.31(c)*.

(i) $R = \Sigma F_y = -85 - 90 - 45 + 45$

$\therefore R = -175$ N

$\therefore R = 175$ N (↓)

(ii) $\Sigma M_A = 85 \times 5 + 90 \times 1.5 + 45 \times 1 - 120 + 45 \times 2$

$\Sigma M_A = 575$ N-m (↺)

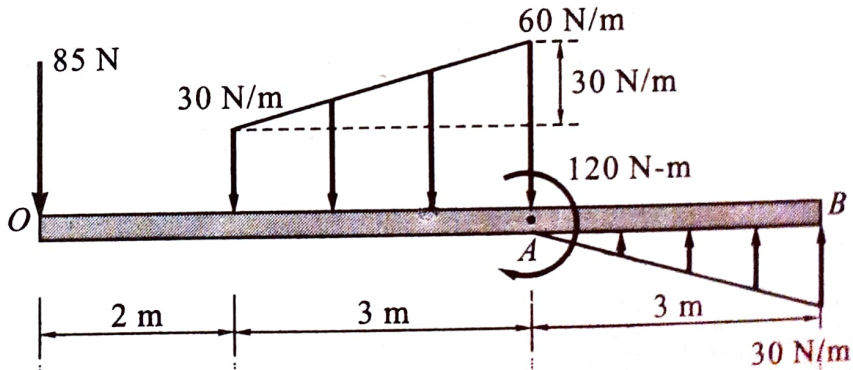

Fig. 2.31(b)

(iii) Resultant of given force system is a force and a couple at point A.

$R = 175$ N (↓) ***Ans.***

$M_A = 575$ N-m (↺) ***Ans.***

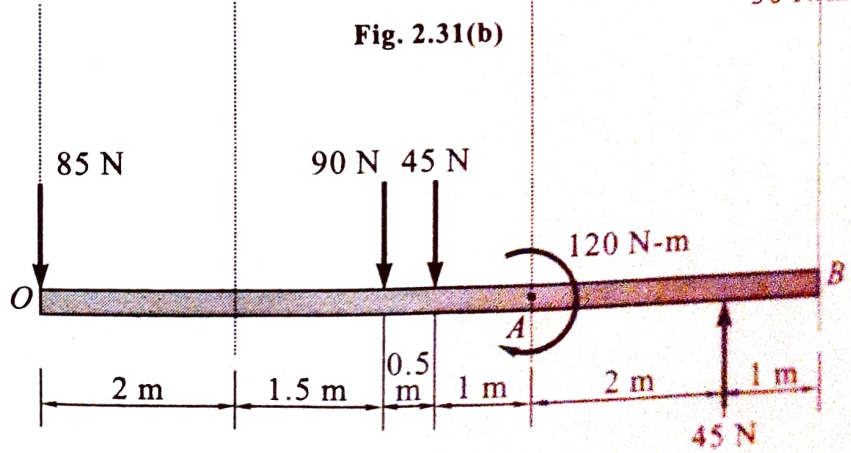

Fig. 2.31(c)

Problem 32

A member ABC is loaded by distributed load and pure moment as shown in *figure 2.32(a)*. F the (i) magnitude and (ii) position along AC of the resultant.

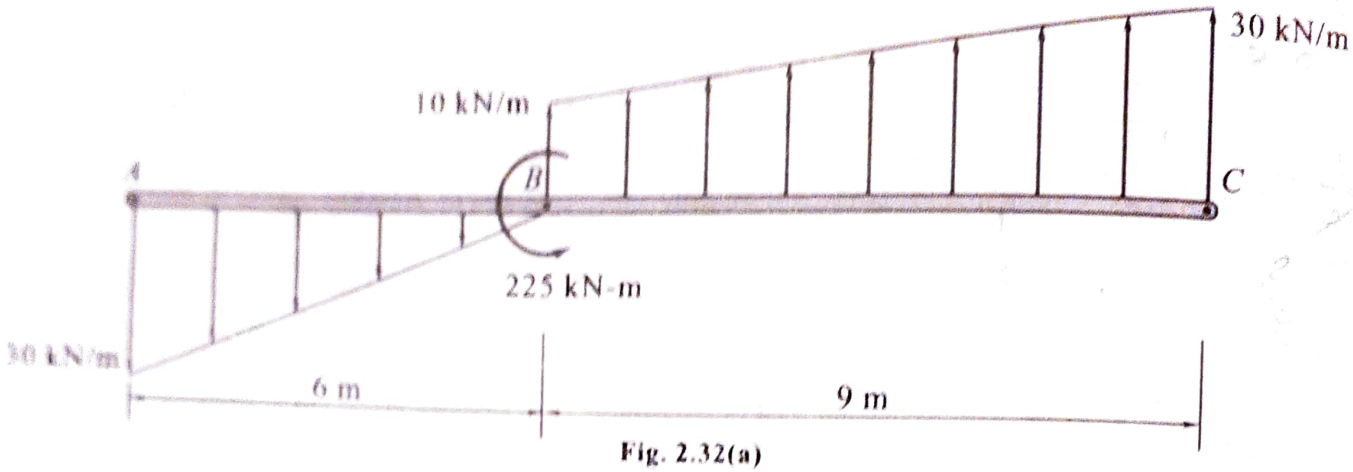

Fig. 2.32(a)

Solution

Draw the member ABC, after converting triangular load (UVL) and trapezoidal load (UDL UVL) by equivalent point load.

Magnitude of load = Area of loading diagram

Equivalent point load acts through centroid of loading diagram. Refer *figure 2.32(b)*.

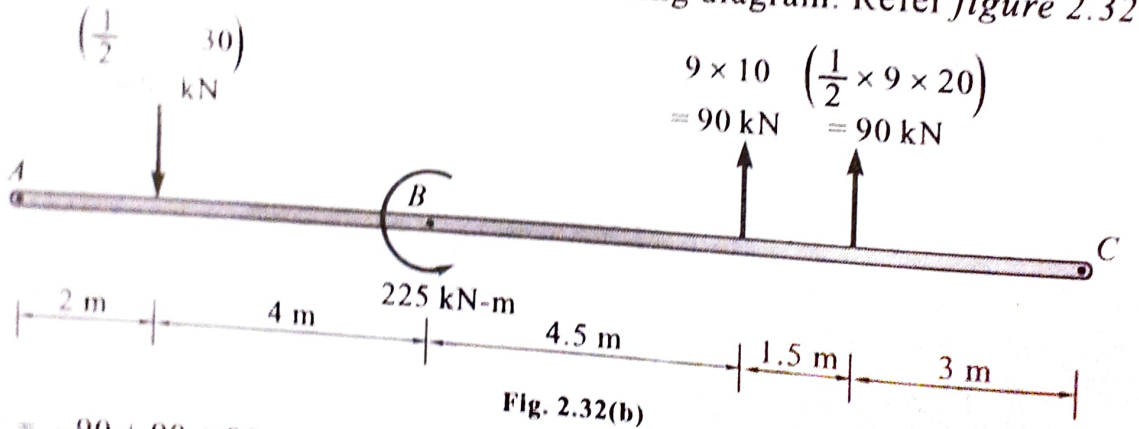

Fig. 2.32(b)

(i) $R = -90 + 90 + 90$

$\therefore R = 90$ kN (↑) **Ans.**

(ii) $\Sigma M_A = -90 \times 2 + 225 + 90 \times 10.5 + 90 \times 12$

$\therefore \Sigma M_A = 2070$ kN-m (↺)

(vi) By Varignon's theorem

$\Sigma M_A = R \times d$

$d = \dfrac{\Sigma M_A}{R} = \dfrac{2070}{90}$

$\therefore d = 23$ m **Ans.**

(vii) Position of resultant w.r.t. point A

Refer *figure 2.32(c)*.

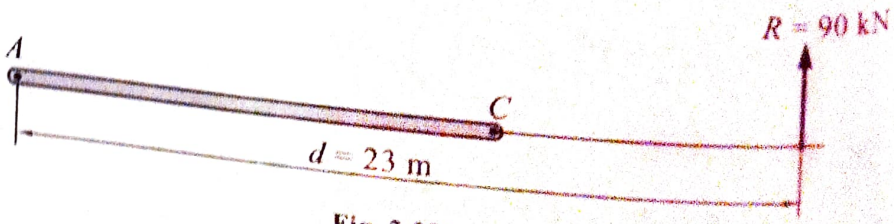

Fig. 2.32(c)

Problem 33

Determine the resultant of the parallel force shown in *figure 2.33(a)* and locate it w.r.t. O, radius is 1 m.

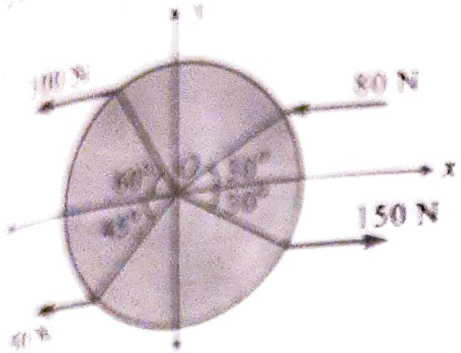

Fig. 2.54(a)

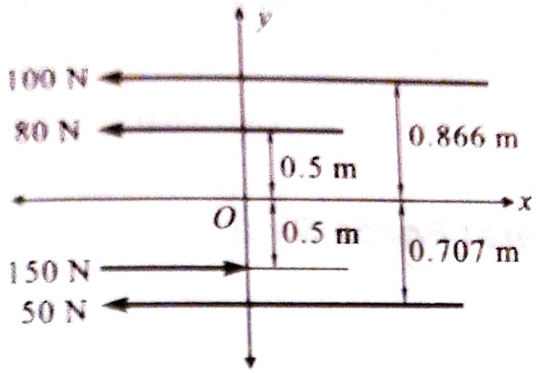

Fig. 2.54(b)

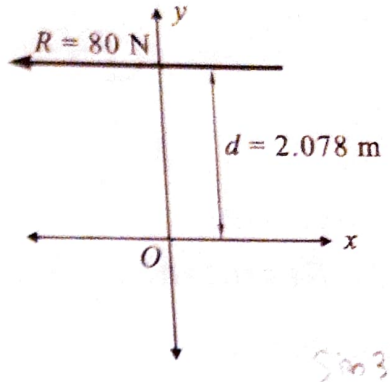

Fig. 2.33(c)

Solution

(i) Magnitude of resultant R

$$R = -100 - 80 + 150 - 50 \qquad \therefore R = -80 \text{ N} = 80 \text{ N } (\leftarrow) \textbf{ Ans.}$$

(ii) $\Sigma M_O = 100 \times 0.866 + 80 \times 0.5 + 150 \times 0.5 - 50 \times 0.707$

$$\Sigma M_O = 166.25 \text{ N-m } (\circlearrowleft)$$

(iii) Applying Varignon's theorem

$$d = \frac{\Sigma M_O}{R} = \frac{166.25}{80} \qquad \therefore d = 2.078 \text{ m}$$

(iv) Position of resultant w.r.t origin O is as shown in *figure 2.33(c)*. **Ans.**

Problem 34

Replace the system of forces and couples as shown in *figure 2.34(a)* by a single force *and* couple at a point A. **(May 2006)**

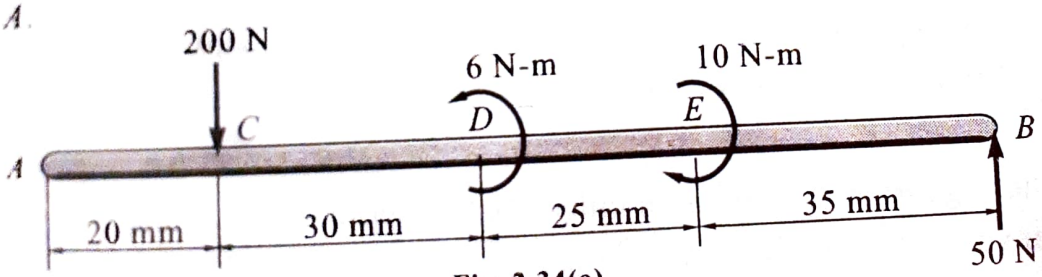

Fig. 2.34(a)

Solution

(i) Magnitude of resultant R

$$R = -200 + 125 = -75$$

$$\therefore R = 75 \text{ N } (\downarrow)$$

(ii) $\Sigma M_A =$ Couple (c)

$$\Sigma M_A = -200 \times 0.02 + 6 - 10 + 125 \times 0.11$$

$$\Sigma M_A = 5.75 \text{ N-m } (\circlearrowleft)$$

Problem 33

Determine the resultant of the parallel force shown in *figure 2.33(a)* and locate it w.r.t. O, radius is 1 m.

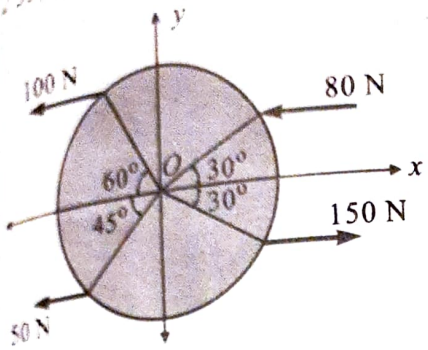

Fig. 2.54(a)

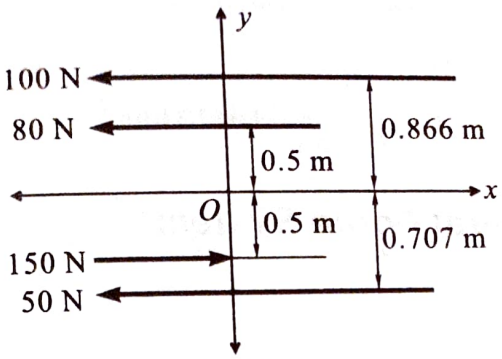

Fig. 2.54(b)

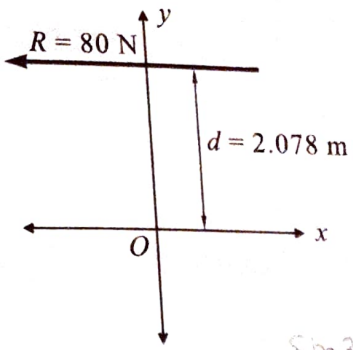

Fig. 2.33(c)

Sin30 = 9/1

Solution

(i) Magnitude of resultant R

$$R = -100 - 80 + 150 - 50 \qquad \therefore R = -80 \text{ N} = 80 \text{ N } (\leftarrow) \textbf{ Ans.}$$

(ii) $\Sigma M_O = 100 \times 0.866 + 80 \times 0.5 + 150 \times 0.5 - 50 \times 0.707$

$$\Sigma M_O = 166.25 \text{ N-m } (\circlearrowleft)$$

(iii) Applying Varignon's theorem

$$d = \frac{\Sigma M_O}{R} = \frac{166.25}{80} \qquad \therefore d = 2.078 \text{ m}$$

(iv) Position of resultant w.r.t origin O is as shown in *figure 2.33(c)*. **Ans.**

Problem 34

Replace the system of forces and couples as shown in *figure 2.34(a)* by a single force *and* couple at a point A. **(May 2006)**

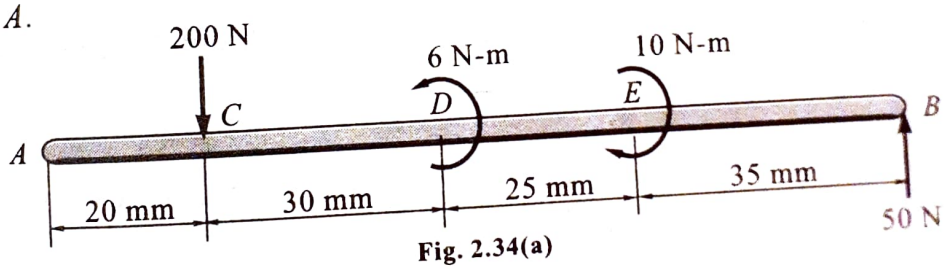

Fig. 2.34(a)

Solution

(i) Magnitude of resultant R

$$R = -200 + 125 = -75$$

$$\therefore R = 75 \text{ N } (\downarrow)$$

(ii) $\Sigma M_A =$ Couple (c)

$$\Sigma M_A = -200 \times 0.02 + 6 - 10 + 125 \times 0.11$$

$$\Sigma M_A = 5.75 \text{ N-m } (\circlearrowleft)$$

(iii) The resultant of forces system is form of single force and couple is as shown in *figure 2.34(b)* at *A*.

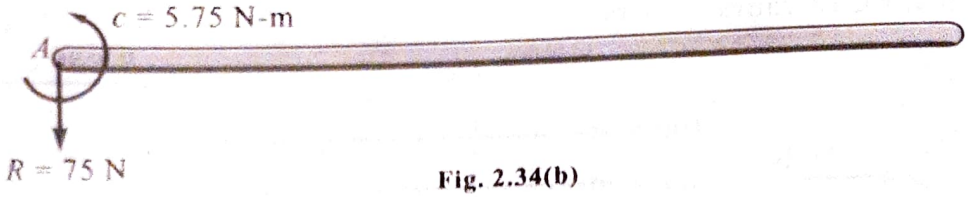

Fig. 2.34(b)

Ans.

2.5 Resultant of General Force System

Procedure

Step 1 : Find ΣF_x

Resolve all the forces along the horizontal x-axis and take the algebraic sum of force components considering proper sign convention (+ve →).

Step 2 : Find ΣF_y

Resolve all the forces along the vertical y-axis and take the algebraic sum of force components considering proper sign convention (+ve ↑).

Step 3 : Find R

Magnitude of resultant is given by

$$R = \sqrt{(\Sigma F_x)^2 + (\Sigma F_y)^2}$$

Step 4 : Find θ

Inclination of the line of action of resultant force with horizontal x-axis is given by

$$\tan\theta = \left|\frac{\Sigma F_y}{\Sigma F_x}\right| \quad \therefore \quad \theta = \tan^{-1}\left(\frac{\Sigma F_y}{\Sigma F_x}\right)$$

Note : Use only positive value of ΣF_x and ΣF_y to find θ with horizontal x-axis so the value of θ will be always acute angle.

Step 5 : ΣM_O

Take the algebraic sum of moment of force about a point (say O) considering proper sign conventions (+ve ↺ / –ve ↻)

Step 6 : Applying Varignon's theorem

$\Sigma M_O = R \times d$ (where d is the perpendicular distance between line of action of R and reference point O)

OR

$\Sigma M_O = \Sigma F_y \times x$ (where x is the distance between point O and intersection of line of action of resultant R with x-axis)

OR

$\Sigma M_O = \Sigma F_x \times y$ (where y is the distance between point O and intersection of line of action of resultant R with y-axis)