Quiz

Assume: 1) the optical axes of 2 cameras are parallel;
2) the intrinsic parameters of both cameras are unknown.
If the corresponding positions of scene points in two images are known,
which of the following are true?

1) Enough to estimate the distance of the scene points to the camera

2) Enough to estimate the relative distance between projected scene points in images

3) Enough to estimate the baseline of two cameras

Epipolar constraint example

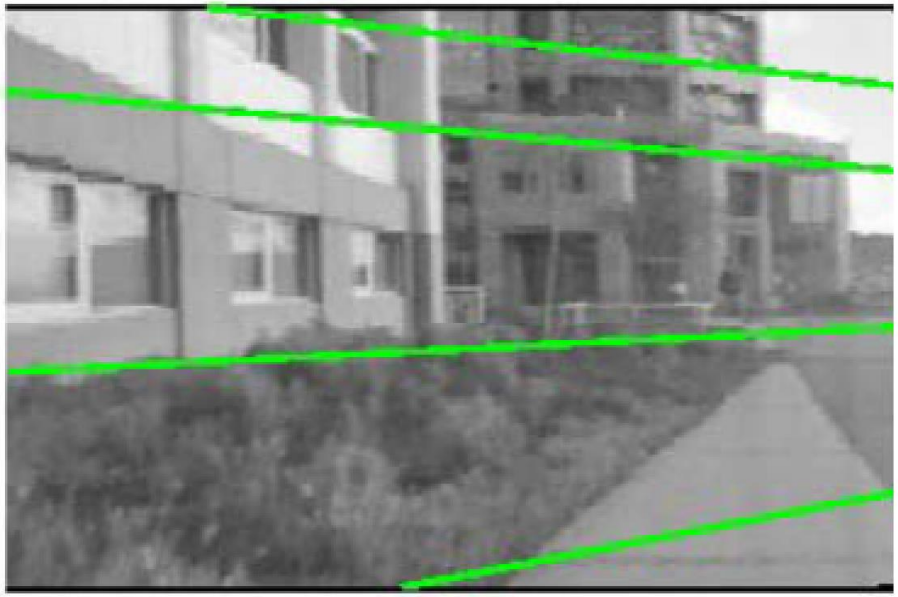

The Cross Product

Given two nonzero vectors $\mathbf{a} = \langle a_1, a_2, a_3 \rangle$ and $b = \langle b_1, b_2, b_3 \rangle$, it is very useful to be able to find a nonzero vector **c** that is perpendicular to both **a** and **b**.

If $\mathbf{c} = \langle c_1, c_2, c_3 \rangle$ is such a vector, then $\mathbf{a} \cdot \mathbf{c} = 0$ and $\mathbf{b} \cdot \mathbf{c} = 0$.

$\mathbf{c} = \mathbf{a} \times \mathbf{b}$

The **cross product** $\mathbf{a} \times \mathbf{b}$ of two vectors **a** and **b**, unlike the dot product, is a vector **c**.

The vector **c** is perpendicular to both **a** and **b.**

Example 1

If **a** = ⟨1, 3, 4⟩ and **b** = ⟨2, 7, –5⟩, then

$$\mathbf{a} \times \mathbf{b} = \begin{vmatrix} \mathbf{i} & \mathbf{j} & \mathbf{k} \\ 1 & 3 & 4 \\ 2 & 7 & -5 \end{vmatrix}$$

$$= \begin{vmatrix} 3 & 4 \\ 7 & -5 \end{vmatrix} \mathbf{i} - \begin{vmatrix} 1 & 4 \\ 2 & -5 \end{vmatrix} \mathbf{j} + \begin{vmatrix} 1 & 3 \\ 2 & 7 \end{vmatrix} \mathbf{k}$$

$$= (-15 - 28)\mathbf{i} - (-5 - 8)\mathbf{j} + (7 - 6)\mathbf{k}$$

$$= -43\mathbf{i} + 13\mathbf{j} + \mathbf{k}$$

The Cross Product

We can also represent the cross product of two vectors in matrix-vector multiplication:

$$\mathbf{a} \times \mathbf{b} = \begin{bmatrix} 0 & -a_3 & a_2 \\ a_3 & 0 & -a_1 \\ -a_2 & a_1 & 0 \end{bmatrix} \begin{bmatrix} b_1 \\ b_2 \\ b_3 \end{bmatrix} = [a_\times]b$$

Epipolar constraint: Calibrated case

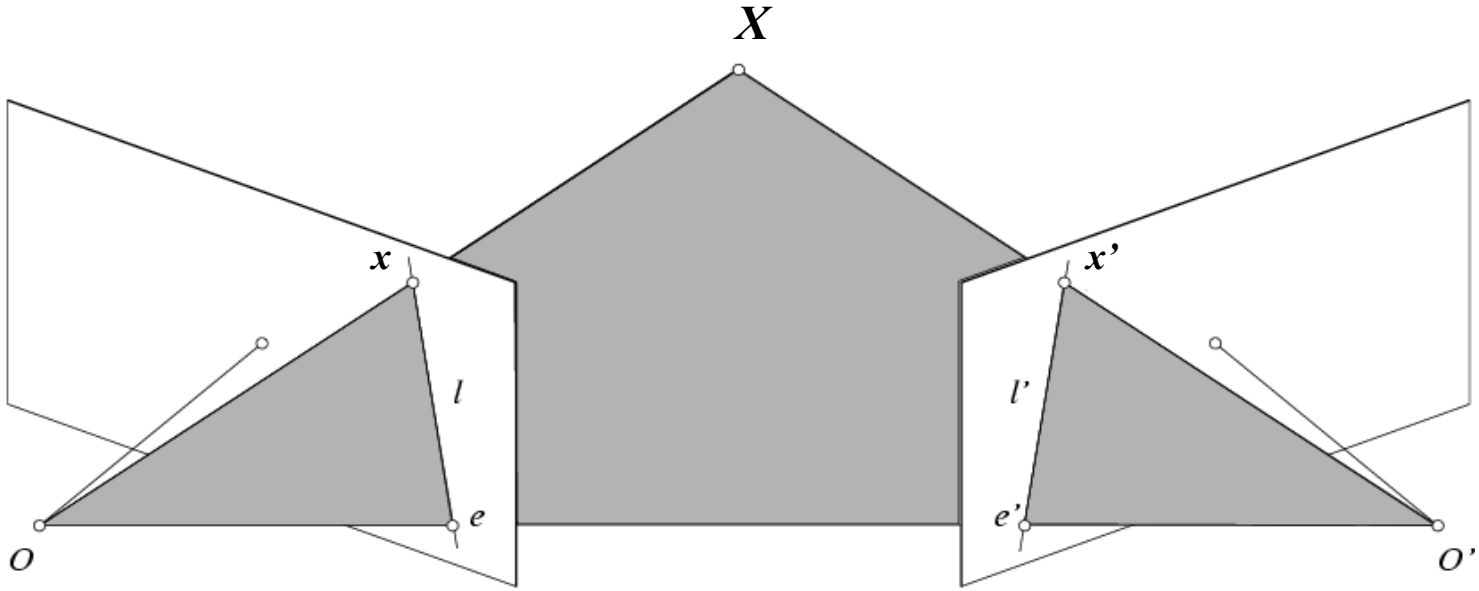

- Assume that the intrinsic and extrinsic parameters of the cameras are known
- Pixel locations are in normalized image coordinate
- We can set the world coordinate system to the coordinate system of the first camera. Then the projection matrices of the two cameras can be written as **[I | 0]** and **[R | t]**

Normalized Image Coordinate

The image coordinate is "normalized" to be independent of camera parameters

$$P' = \underbrace{K}_{\text{intrinsic parameters}}\overbrace{[R \quad T]}^{\text{extrinsic parameters}}P_w = MP_w$$

$$\boxed{K^{-1}P'} = [R \quad T]P_w$$

normalized
image coordinate

$$\boxed{K^{-1}M} = [R \quad T] = [I \quad 0]\begin{bmatrix} R & T \\ 0 & 1 \end{bmatrix}$$

projection matrix
for normalized camera

Epipolar constraint: Calibrated case

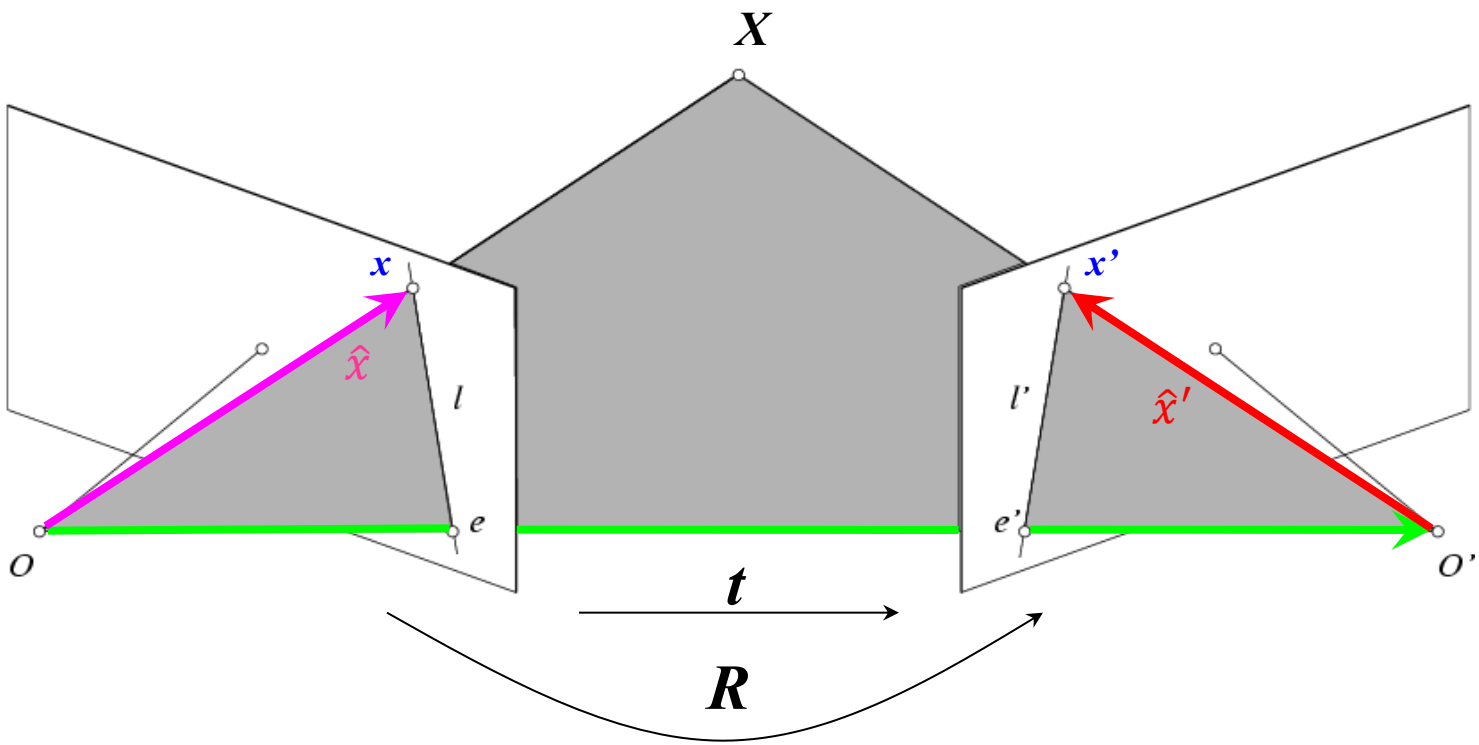

The vectors $R\hat{x}$, t, and $\hat{x}'$ are coplanar

Epipolar constraint: Calibrated case

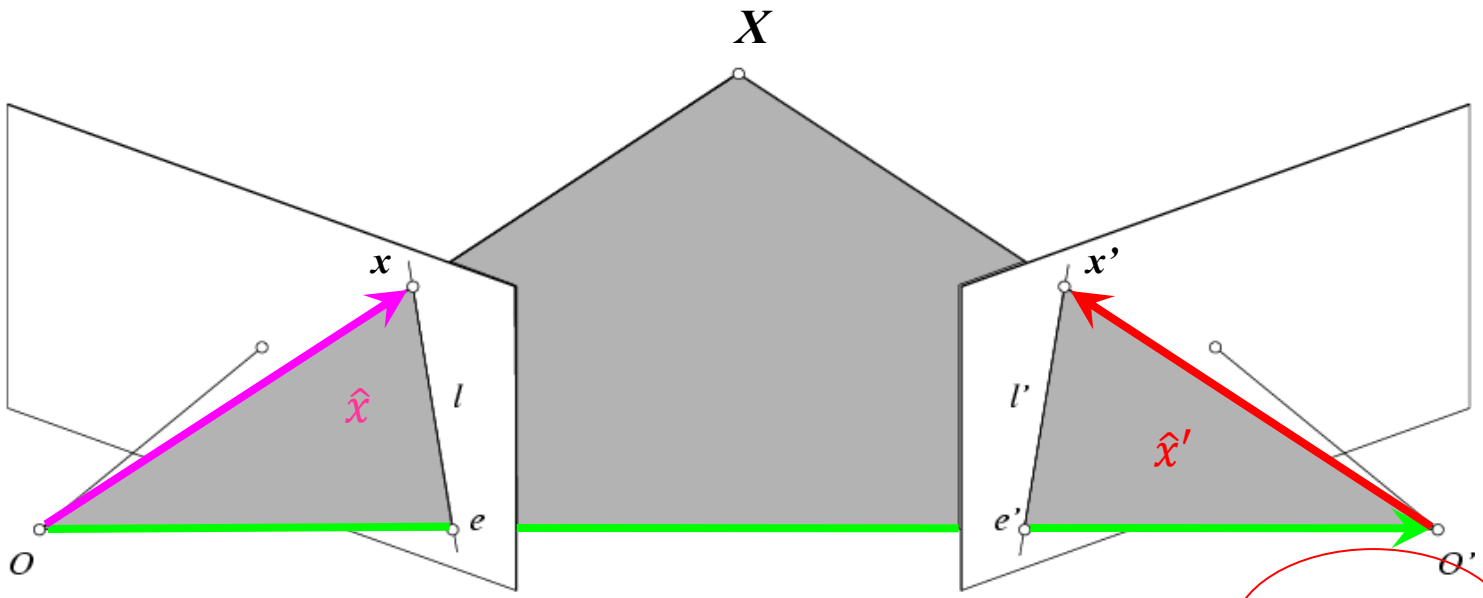

$$\hat{\boldsymbol{x}}' \cdot [\boldsymbol{t} \times (\boldsymbol{R}\hat{\boldsymbol{x}})] = \mathbf{0} \quad \Rightarrow \quad \hat{\boldsymbol{x}}'^{T} \boldsymbol{E} \hat{\boldsymbol{x}} = \mathbf{0} \quad \textbf{where} \quad \mathbf{E}=[\boldsymbol{t}_{\times}]\mathbf{R}$$

- $\boldsymbol{E}\,\hat{\boldsymbol{x}}$ is the epipolar line associated with $\hat{\boldsymbol{x}}$ ($\boldsymbol{l}' = \boldsymbol{E}\,\hat{\boldsymbol{x}}$)

Essential Matrix E
(Longuet-Higgins, 1981)

The vectors $\boldsymbol{R}\hat{\boldsymbol{x}}$, $\boldsymbol{t}$, and $\hat{\boldsymbol{x}}'$ are coplanar

Moving on to stereo…

Fuse a calibrated binocular stereo pair to produce a depth image

image 1

image 2

Dense depth map

Many of these slides adapted from Steve Seitz and Lana Lazebnik

Basic stereo matching algorithm

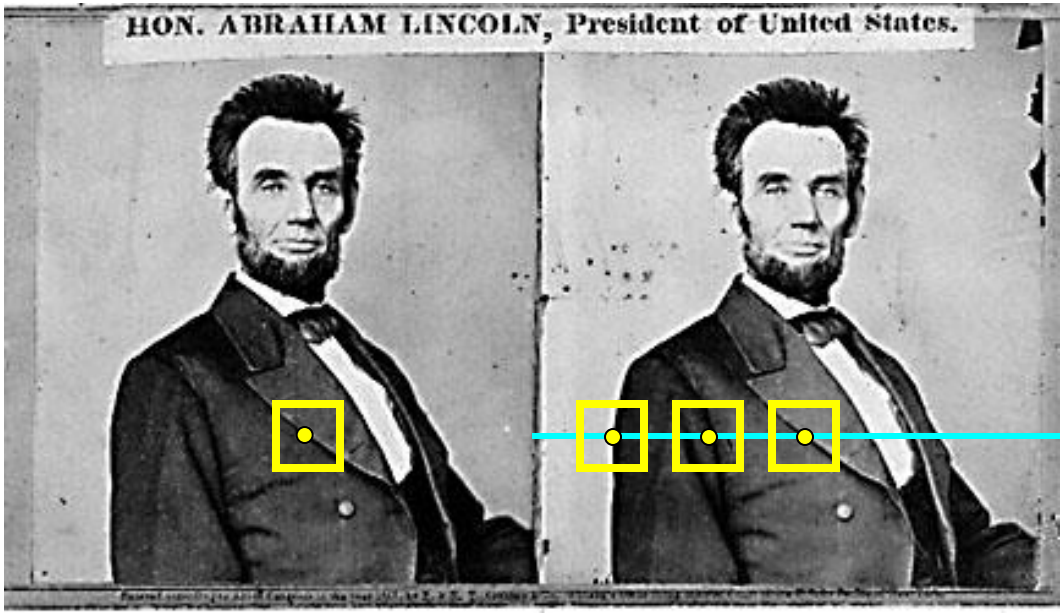

- If necessary, rectify the two stereo images to transform epipolar lines into scanlines
- For each pixel x in the first image
  - Find corresponding epipolar scanline in the right image
  - Search the scanline and pick the best match x’
  - Compute disparity x-x’ and set depth(x) = fB/(x-x’)

Simplest Case: Parallel images

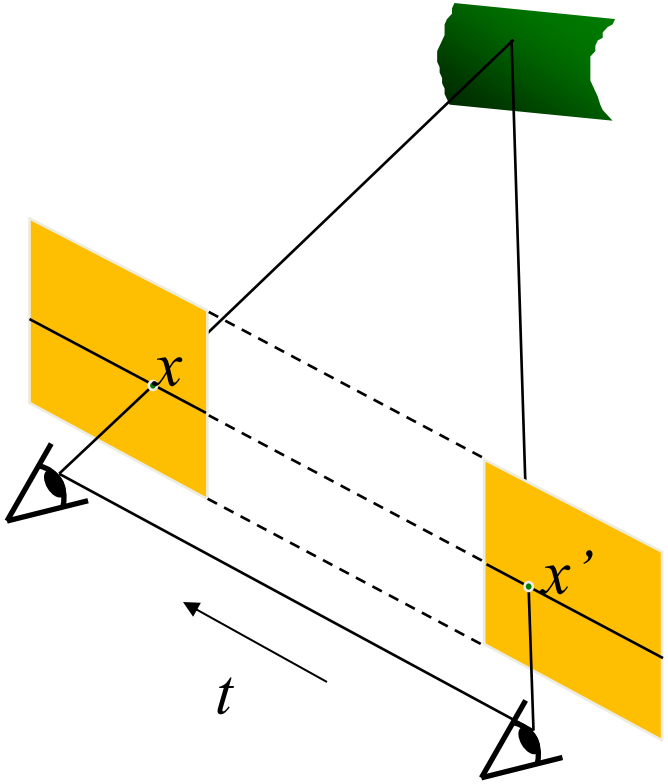

Epipolar constraint:

$$x^T E x' = 0, \quad E = [t_\times]R$$

$$R = I \qquad t = (T, 0, 0)$$

$$E = [t_\times]R = \begin{bmatrix} 0 & 0 & 0 \\ 0 & 0 & -T \\ 0 & T & 0 \end{bmatrix}$$

$$\begin{pmatrix} u & v & 1 \end{pmatrix} \begin{bmatrix} 0 & 0 & 0 \\ 0 & 0 & -T \\ 0 & T & 0 \end{bmatrix} \begin{pmatrix} u' \\ v' \\ 1 \end{pmatrix} = 0$$

The y-coordinates of corresponding points are the same

Stereo image rectification

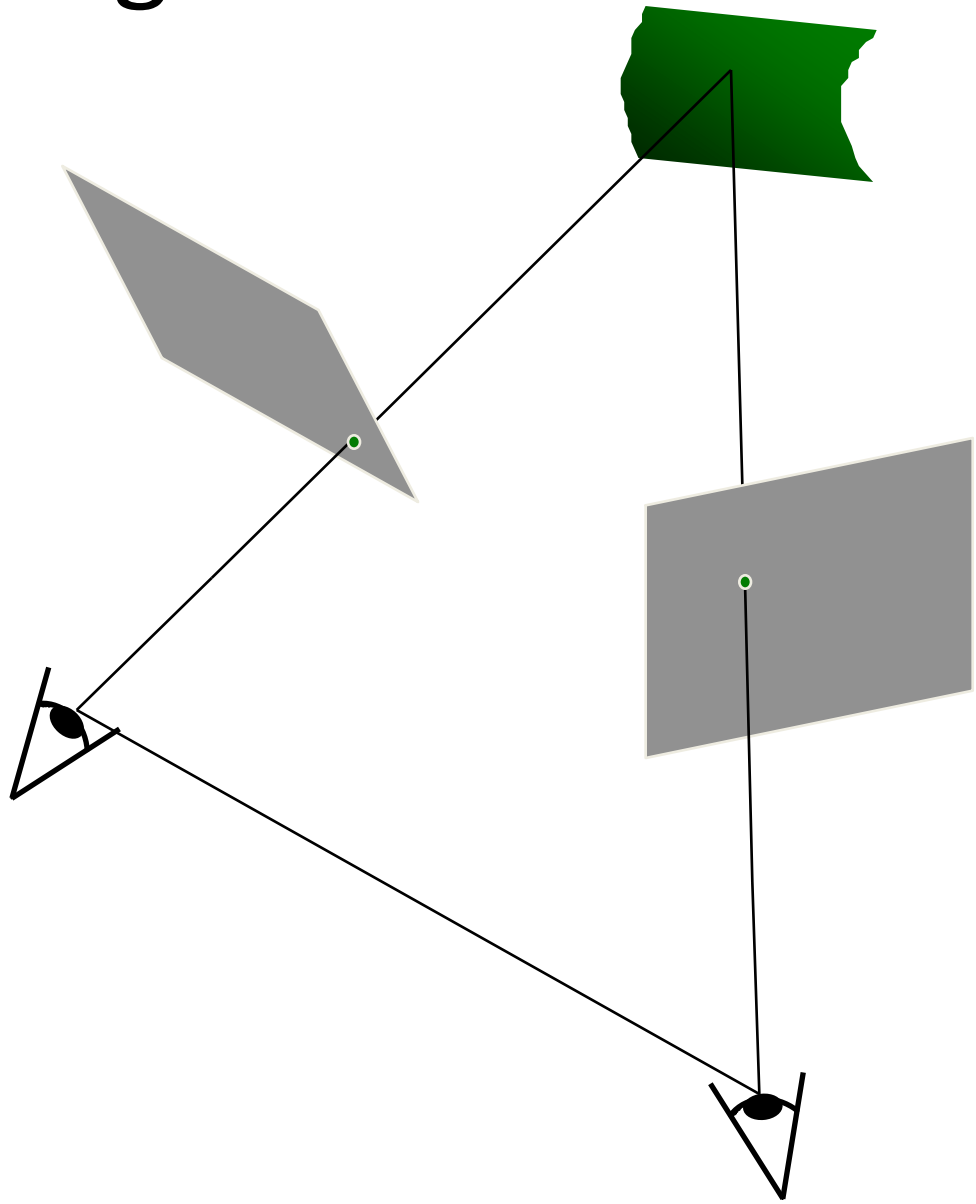

Stereo image rectification

- Reproject image planes onto a common plane parallel to the line between camera centers
- Pixel motion is horizontal after this transformation

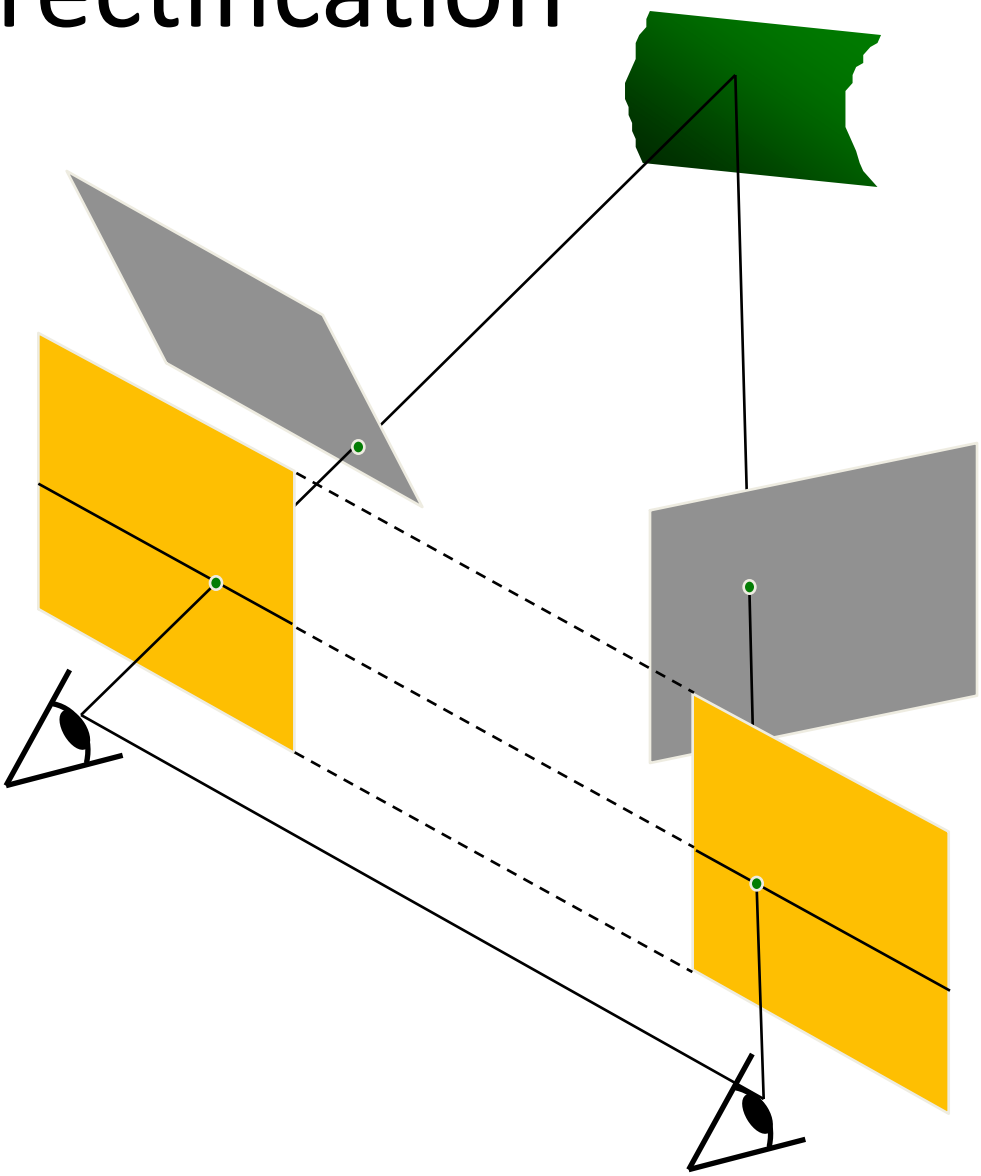

➢ C. Loop and Z. Zhang. Computing Rectifying Homographies for Stereo Vision. IEEE Conf. Computer Vision and Pattern Recognition, 1999.

Example