Epipolar constraint example

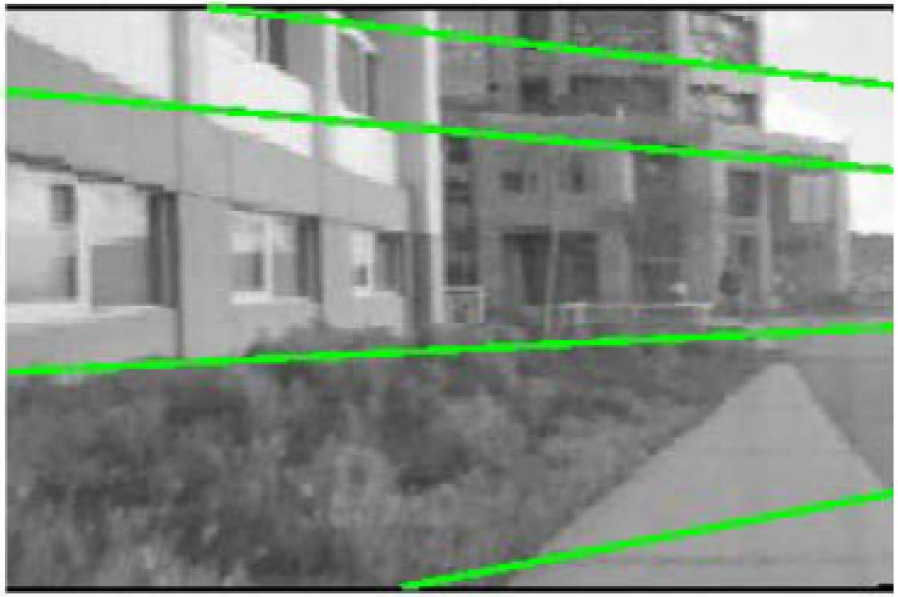

The Cross Product

Given two nonzero vectors $\mathbf{a} = \langle a_1, a_2, a_3 \rangle$ and $b = \langle b_1, b_2, b_3 \rangle$, it is very useful to be able to find a nonzero vector **c** that is perpendicular to both **a** and **b**.

If $\mathbf{c} = \langle c_1, c_2, c_3 \rangle$ is such a vector, then $\mathbf{a} \cdot \mathbf{c} = 0$ and $\mathbf{b} \cdot \mathbf{c} = 0$.

$\mathbf{c} = \mathbf{a} \times \mathbf{b}$

The **cross product** $\mathbf{a} \times \mathbf{b}$ of two vectors **a** and **b**, unlike the dot product, is a vector **c**.

The vector **c** is perpendicular to both **a** and **b.**

Example 1

If **a** = ⟨1, 3, 4⟩ and **b** = ⟨2, 7, –5⟩, then

$$\mathbf{a} \times \mathbf{b} = \begin{vmatrix} \mathbf{i} & \mathbf{j} & \mathbf{k} \\ 1 & 3 & 4 \\ 2 & 7 & -5 \end{vmatrix}$$

$$= \begin{vmatrix} 3 & 4 \\ 7 & -5 \end{vmatrix} \mathbf{i} - \begin{vmatrix} 1 & 4 \\ 2 & -5 \end{vmatrix} \mathbf{j} + \begin{vmatrix} 1 & 3 \\ 2 & 7 \end{vmatrix} \mathbf{k}$$

$$= (-15 - 28)\mathbf{i} - (-5 - 8)\mathbf{j} + (7 - 6)\mathbf{k}$$

$$= -43\mathbf{i} + 13\mathbf{j} + \mathbf{k}$$

The Cross Product

We can also represent the cross product of two vectors in matrix-vector multiplication:

$$\mathbf{a} \times \mathbf{b} = \begin{bmatrix} 0 & -a_3 & a_2 \\ a_3 & 0 & -a_1 \\ -a_2 & a_1 & 0 \end{bmatrix} \begin{bmatrix} b_1 \\ b_2 \\ b_3 \end{bmatrix} = [a_\times] b$$

Epipolar constraint: Calibrated case

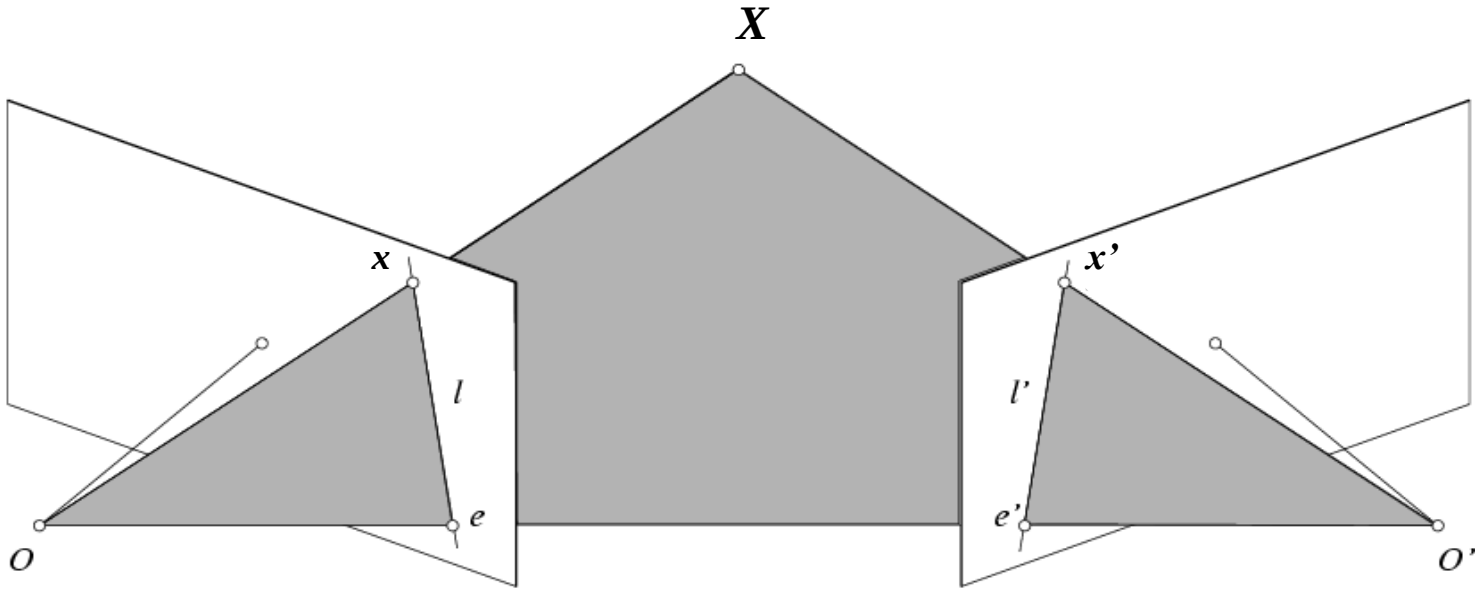

- Assume that the intrinsic and extrinsic parameters of the cameras are known
- Pixel locations are in normalized image coordinate
- We can set the world coordinate system to the coordinate system of the first camera. Then the projection matrices of the two cameras can be written as **[I | 0]** and **[R | t]**

Normalized Image Coordinate

The image coordinate is "normalized" to be independent of camera parameters

$$P' = \underbrace{K}_{\text{intrinsic parameters}}\overbrace{[R \quad T]}^{\text{extrinsic parameters}}P_w = MP_w$$

$$\boxed{K^{-1}P'} = [R \quad T]P_w$$

normalized
image coordinate

$$\boxed{K^{-1}M} = [R \quad T] = [I \quad 0]\begin{bmatrix} R & T \\ 0 & 1 \end{bmatrix}$$

projection matrix
for normalized camera

Epipolar constraint: Calibrated case

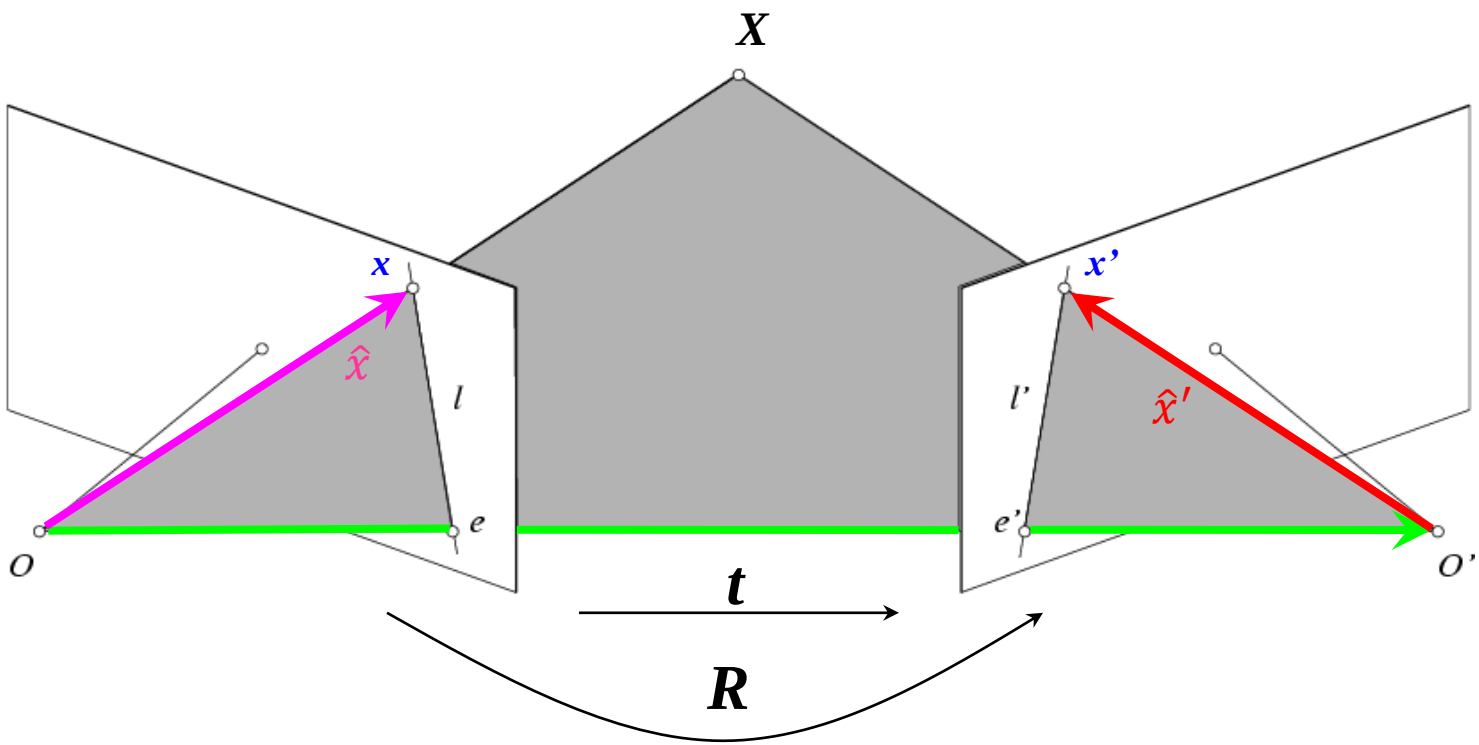

The vectors $\boldsymbol{R}\hat{x}$, $\boldsymbol{t}$, and $\hat{x}'$ are coplanar

Epipolar constraint: Calibrated case

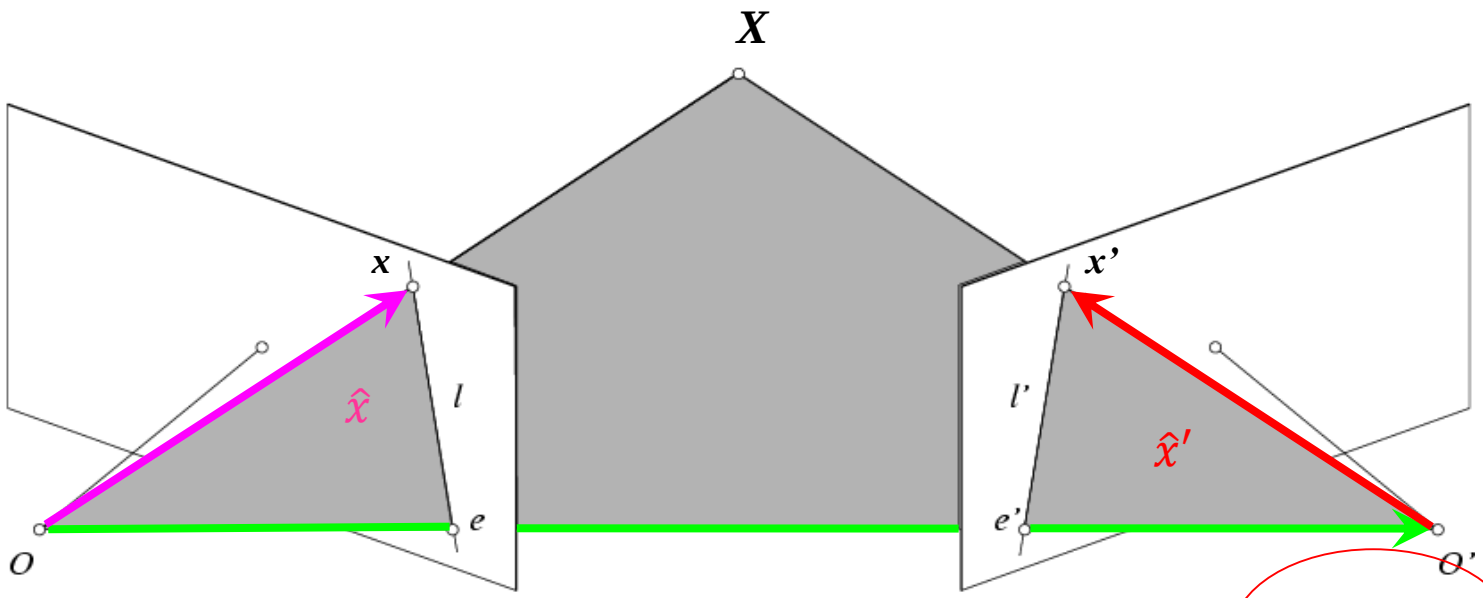

$$\hat{\boldsymbol{x}}' \cdot [\boldsymbol{t} \times (\boldsymbol{R}\hat{\boldsymbol{x}})] = \mathbf{0} \quad \Rightarrow \quad \hat{\boldsymbol{x}}'^{T} \boldsymbol{E} \hat{\boldsymbol{x}} = \mathbf{0} \quad \textbf{where} \quad \mathbf{E}=[\boldsymbol{t}_{\times}]\mathbf{R}$$

- $\boldsymbol{E}\,\hat{\boldsymbol{x}}$ is the epipolar line associated with $\hat{\boldsymbol{x}}$ ($\boldsymbol{l}' = \boldsymbol{E}\,\hat{\boldsymbol{x}}$)

Essential Matrix E
(Longuet-Higgins, 1981)

The vectors $\boldsymbol{R}\hat{\boldsymbol{x}}$, $\boldsymbol{t}$, and $\hat{\boldsymbol{x}}'$ are coplanar

Moving on to stereo…

Fuse a calibrated binocular stereo pair to produce a depth image

image 1

image 2

Dense depth map

Many of these slides adapted from Steve Seitz and Lana Lazebnik

Basic stereo matching algorithm

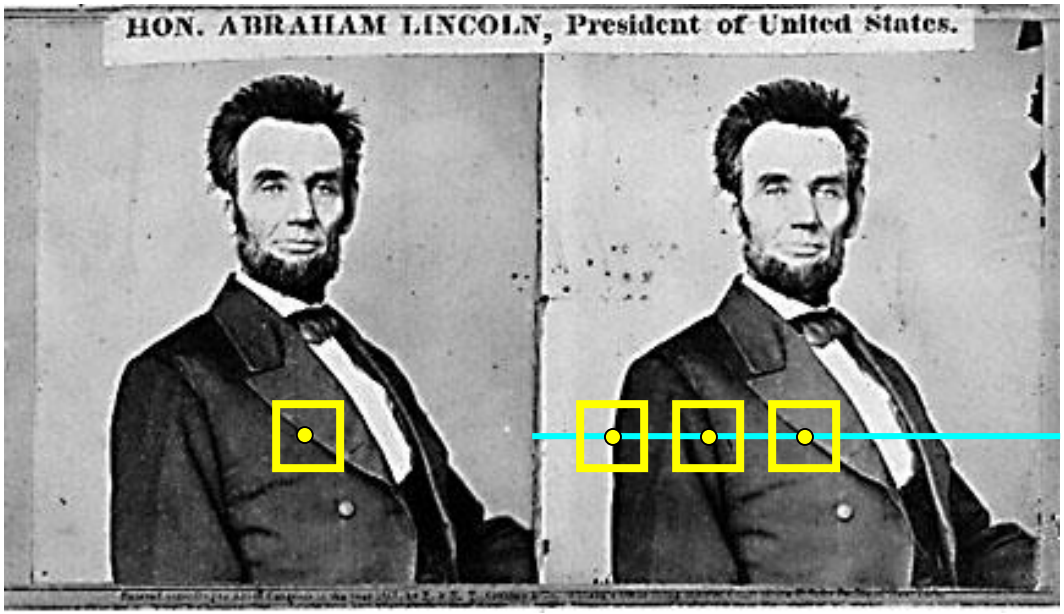

- If necessary, rectify the two stereo images to transform epipolar lines into scanlines
- For each pixel x in the first image
  - Find corresponding epipolar scanline in the right image
  - Search the scanline and pick the best match x’
  - Compute disparity x-x’ and set depth(x) = fB/(x-x’)

Simplest Case: Parallel images

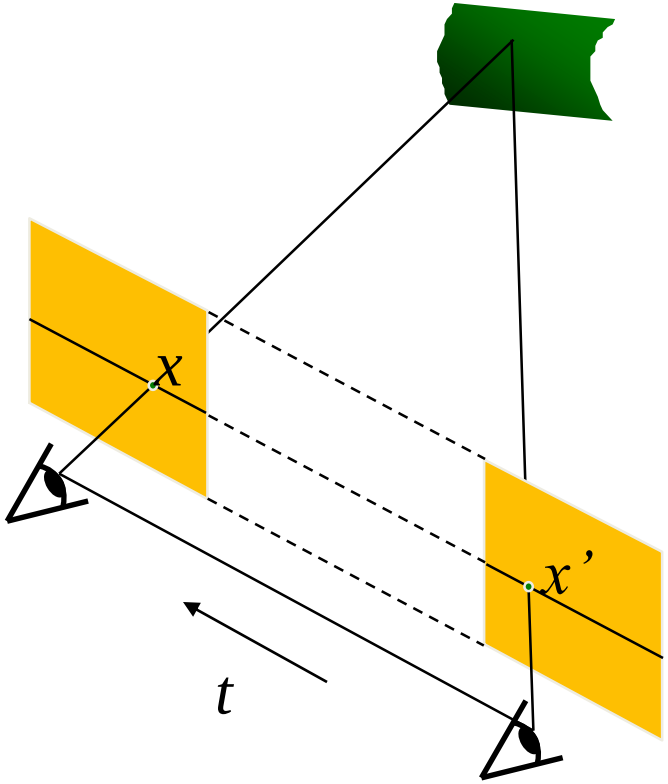

Epipolar constraint:

$$x^T E x' = 0, \quad E = [t_\times]R$$

$$R = I \qquad t = (T, 0, 0)$$

$$E = [t_\times]R = \begin{bmatrix} 0 & 0 & 0 \\ 0 & 0 & -T \\ 0 & T & 0 \end{bmatrix}$$

$$\begin{pmatrix} u & v & 1 \end{pmatrix} \begin{bmatrix} 0 & 0 & 0 \\ 0 & 0 & -T \\ 0 & T & 0 \end{bmatrix} \begin{pmatrix} u' \\ v' \\ 1 \end{pmatrix} = 0$$

The y-coordinates of corresponding points are the same

Stereo image rectification

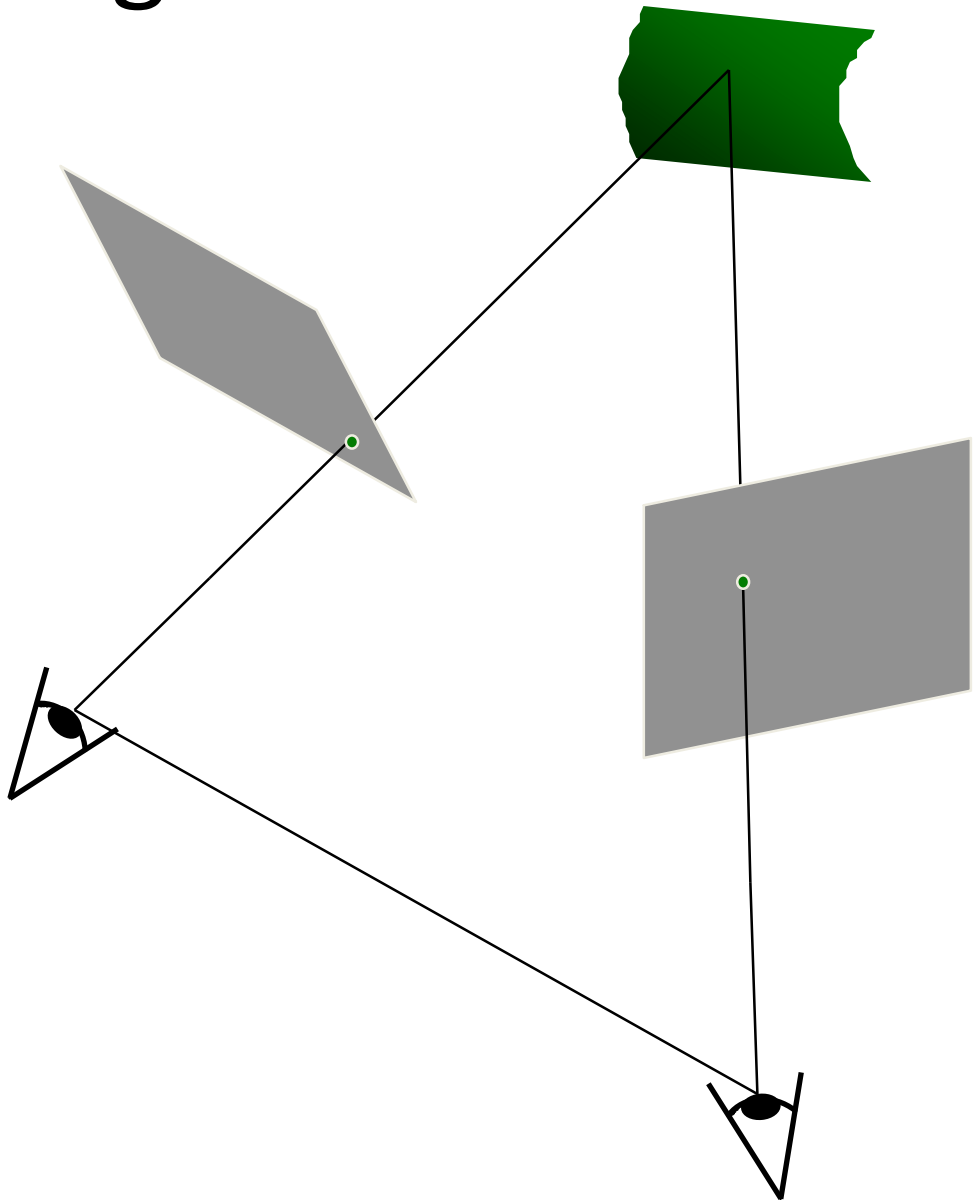

Stereo image rectification

- Reproject image planes onto a common plane parallel to the line between camera centers

- Pixel motion is horizontal after this transformation

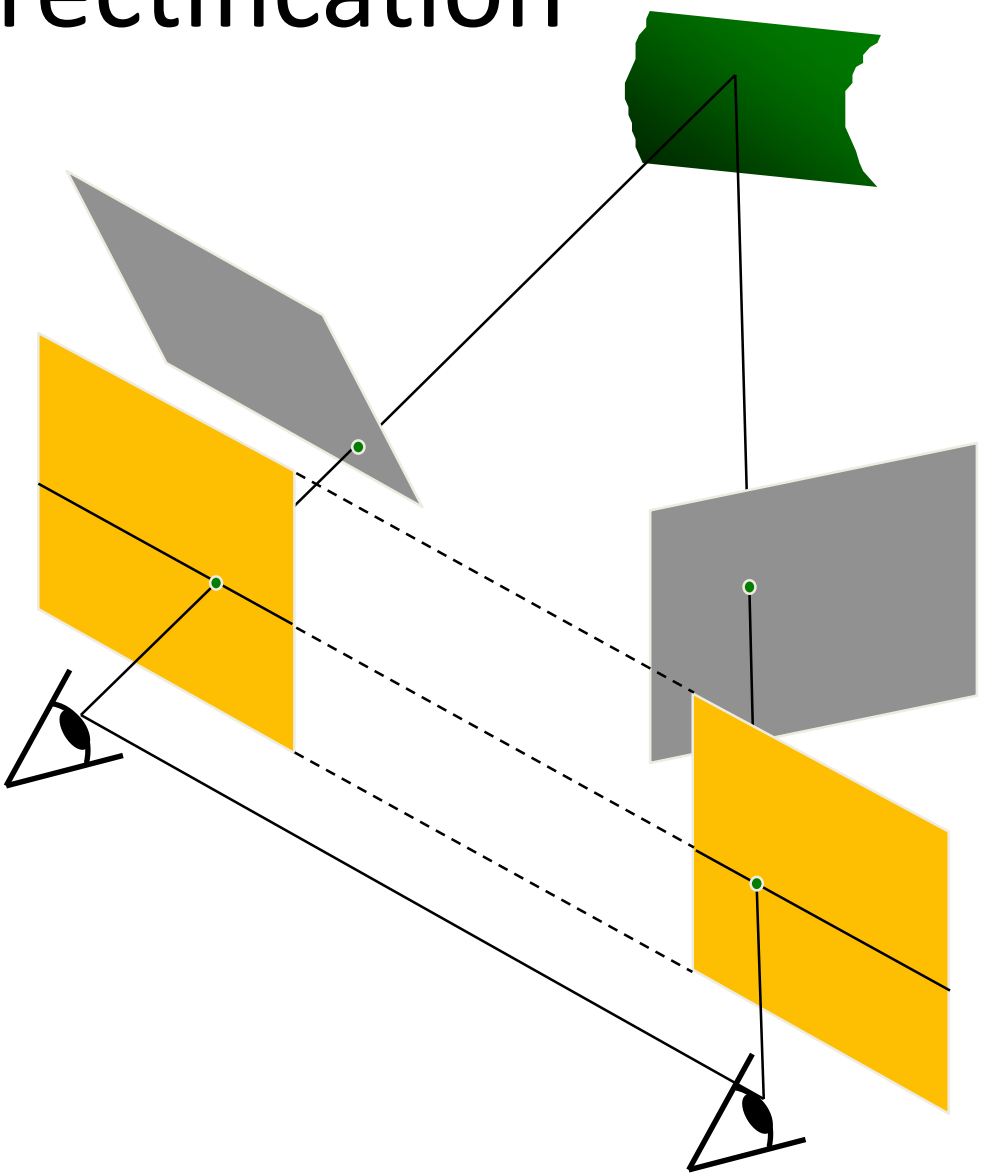

➢ C. Loop and Z. Zhang. Computing Rectifying Homographies for Stereo Vision. IEEE Conf. Computer Vision and Pattern Recognition, 1999.

Example