What is Point Cloud

- A collection of Un-ordered points with
  - Geometry: expressed as [x, y, z]
  - Color Attributes: [r g b], or [y u v]
  - Additional info: normal, timestamp, …etc.
- Key difference from mesh: no order info

Credit: Zhu Li

Structure from motion

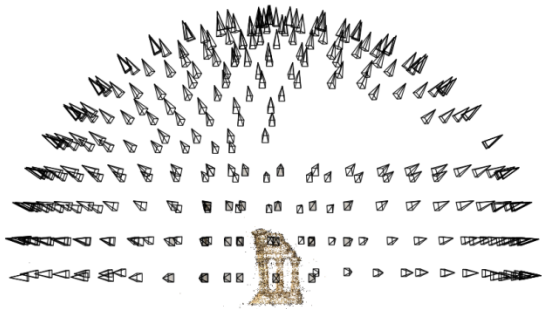

Reconstruction (side)

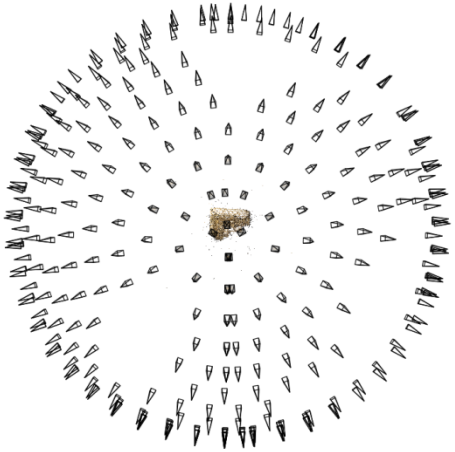

(top)

- Input: images with points in correspondence
  $p_{i,j} = (u_{i,j}, v_{i,j})$

- Output
  - structure: 3D location $\mathbf{x}_i$ for each point p_i
  - motion: camera parameters $\mathbf{R}_j$, $\mathbf{t}_j$

- Objective function: minimize *reprojection error*

Feature matching

Estimate fundamental matrix between each pair (with RANSAC)

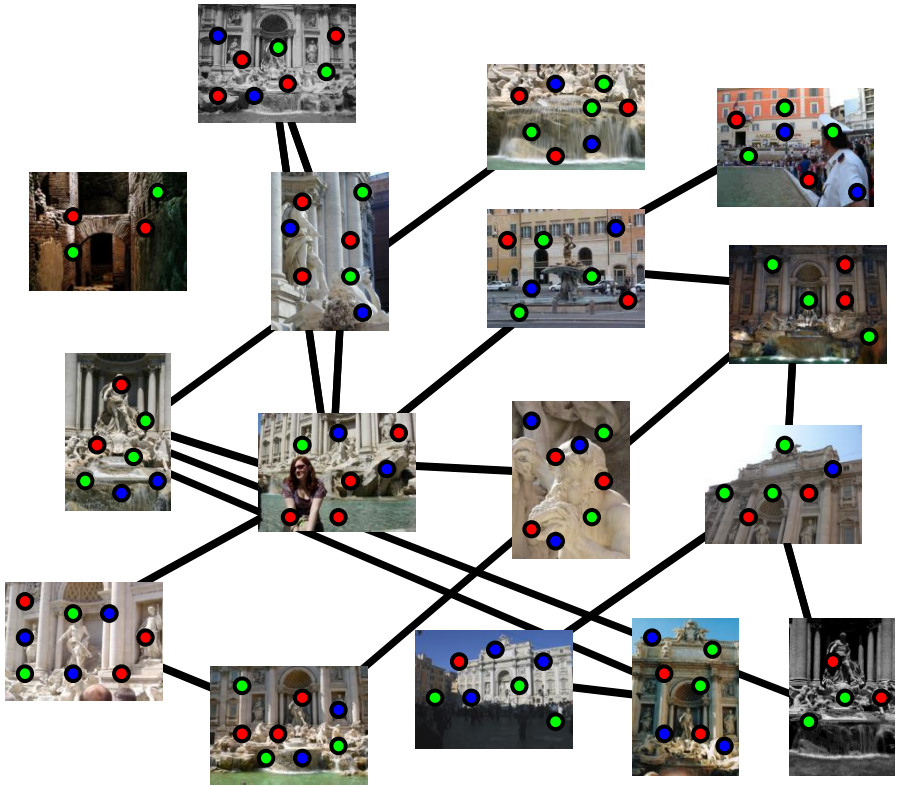

Correspondence estimation

- Link up pairwise matches to form connected components of matches across several images

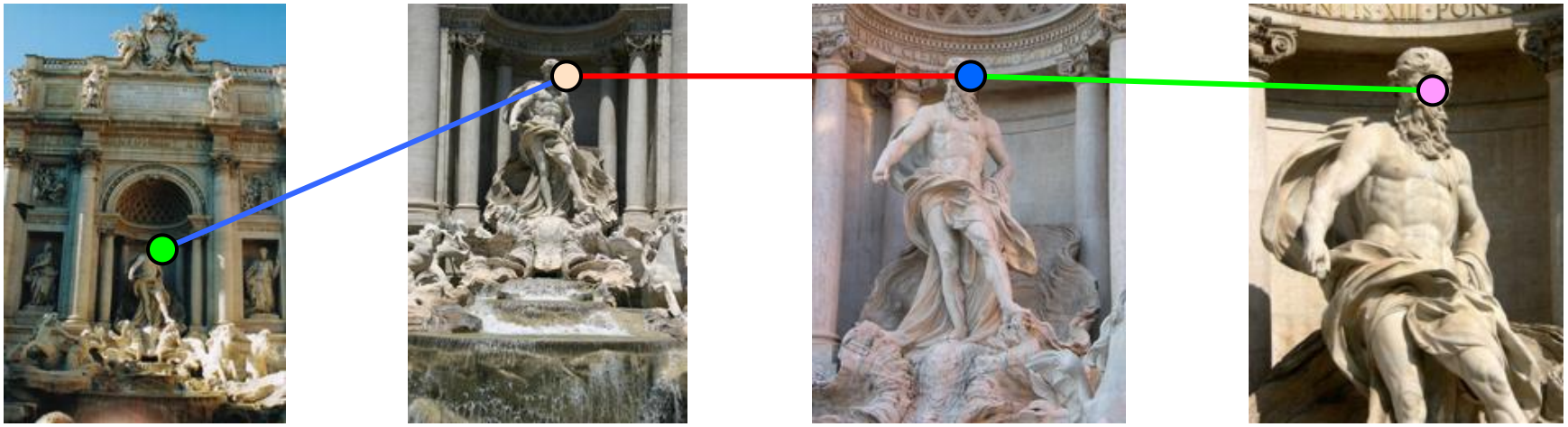

Image 1 Image 2 Image 3 Image 4

Structure from motion

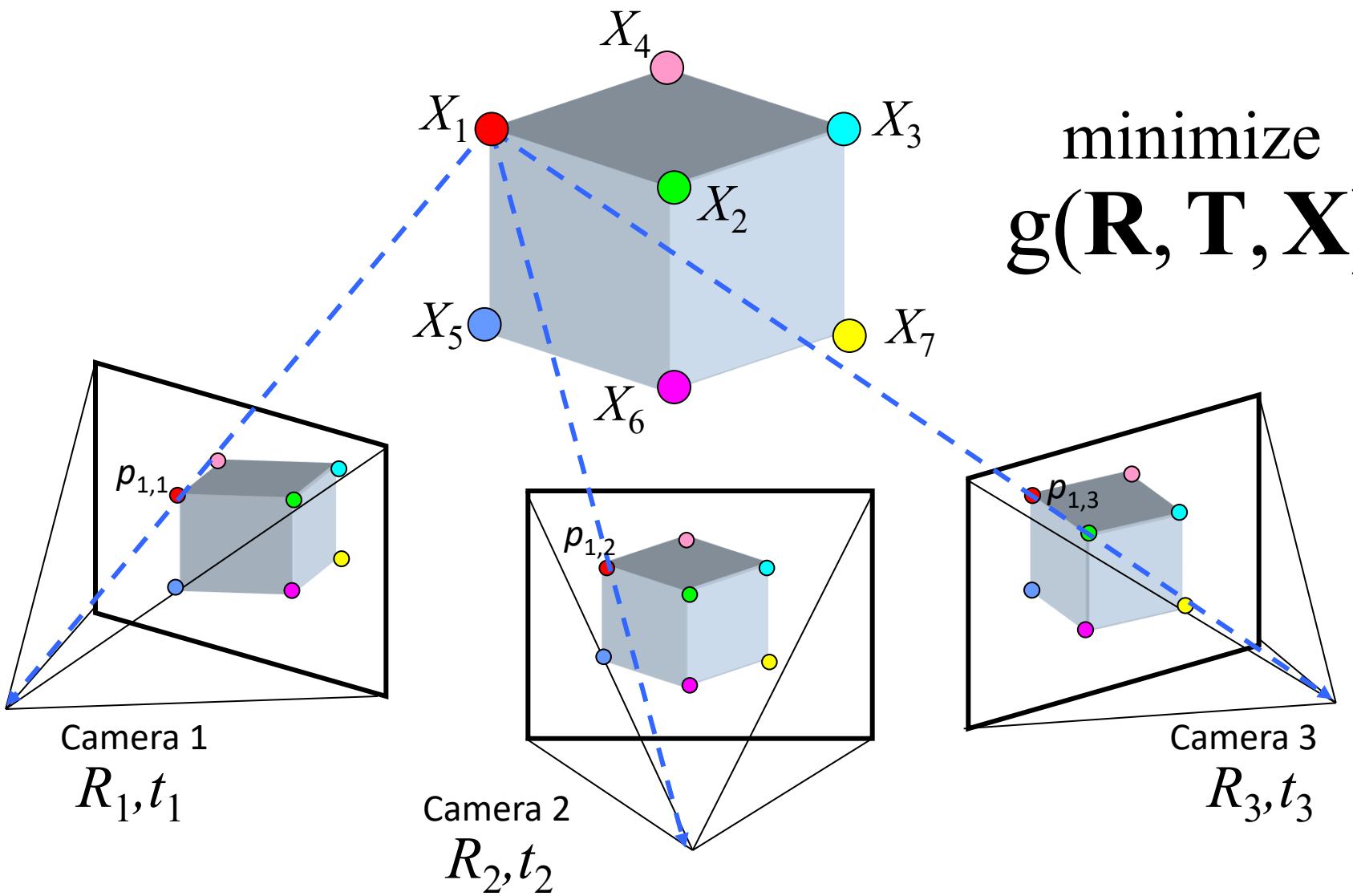

minimize

$$g(\mathbf{R}, \mathbf{T}, \mathbf{X})$$

Re-projection Error

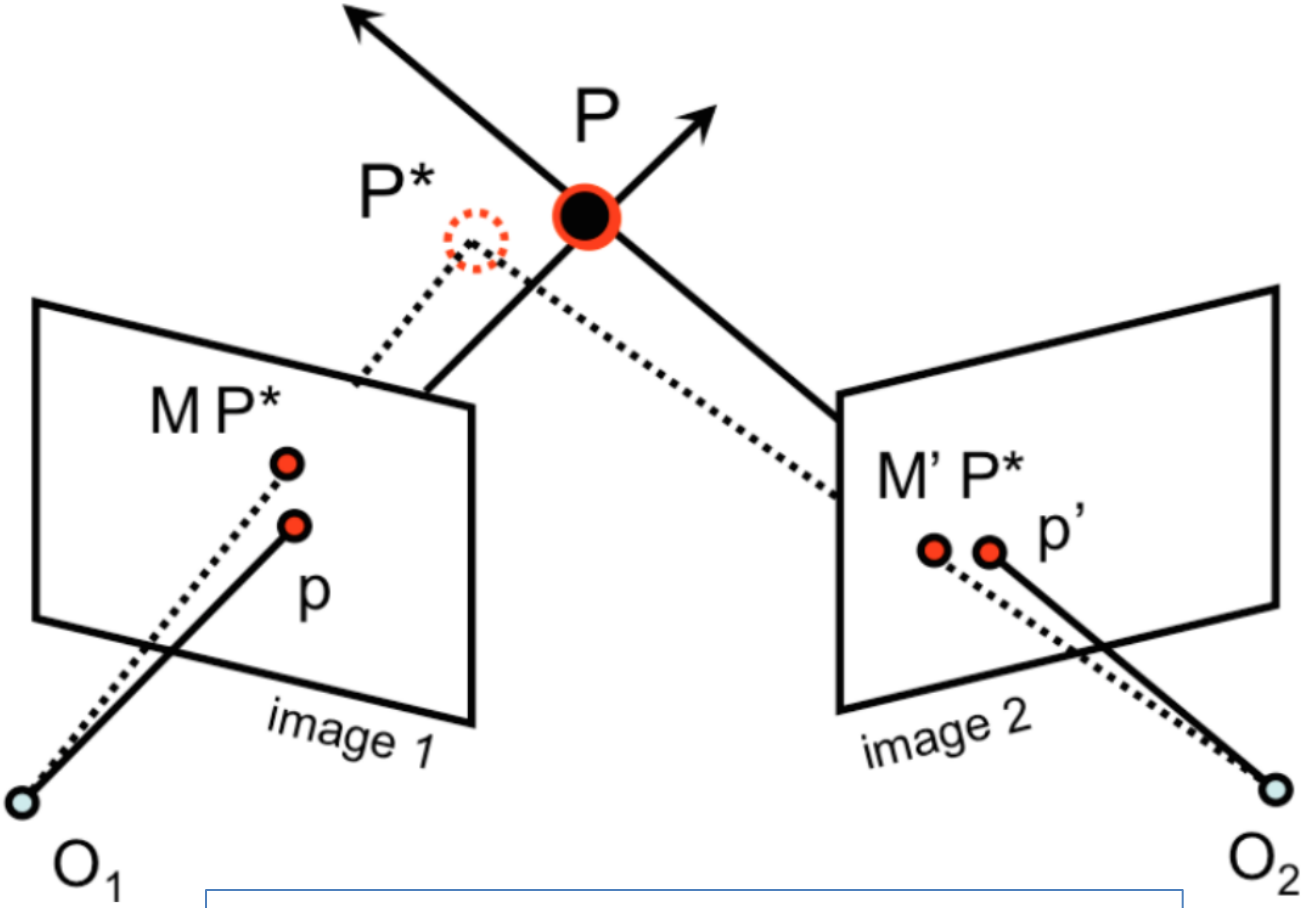

$$\min \|M\hat{P} - p\|^2 + \|M'\hat{P} - p'\|^2$$

Problem size

- What are the variables need to be solved? R t P

- Trevi Fountain collection

  466 input photos

  + > 100,000 3D points

  = very large optimization problem

Constraints vs #Unknowns

$$\underset{\{P_i\},K,\{R_j\},\{T_j\}}{\arg\min} \sum_{j=1}^{M}\sum_{i=1}^{N} (\boxed{u_i^j} - f(K,R_j,T_j,P_i))^2 + (\boxed{v_i^j} - g(K,R_j,T_j,P_i))^2$$

- *M* camera poses
- *N* points
- *2MN* point constraints

Local measures of uniqueness

Suppose we only consider a small window of pixels

- What defines whether a feature is a good or bad candidate?

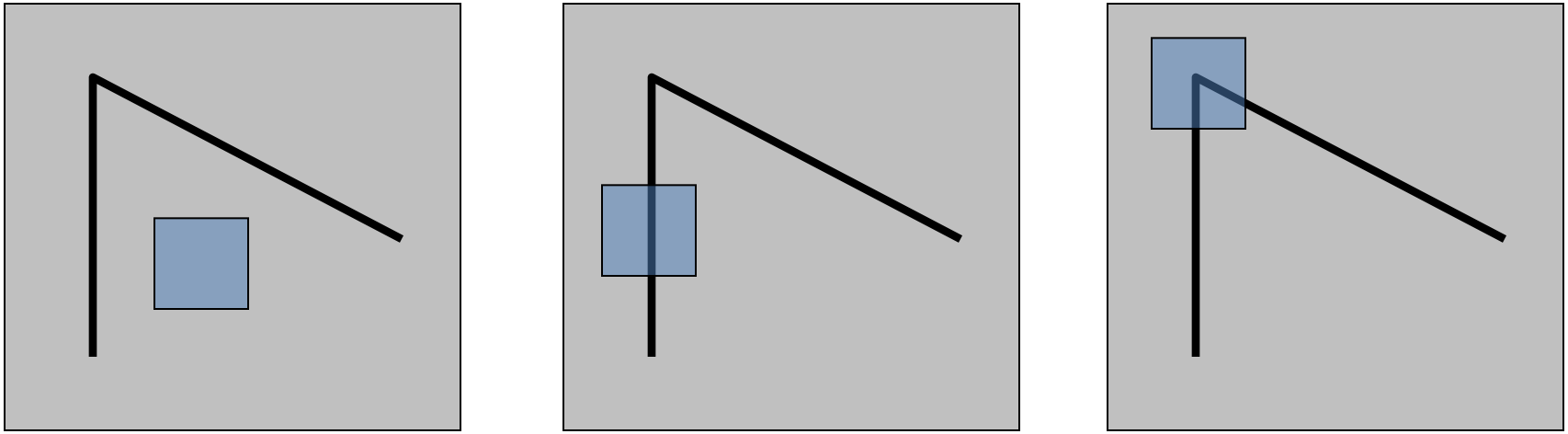

Credit: S. Seitz, D. Frolova, D. Simakov

Local measure of feature uniqueness

- How does the window change when you shift it?
- Shifting the window in any direction causes a big change

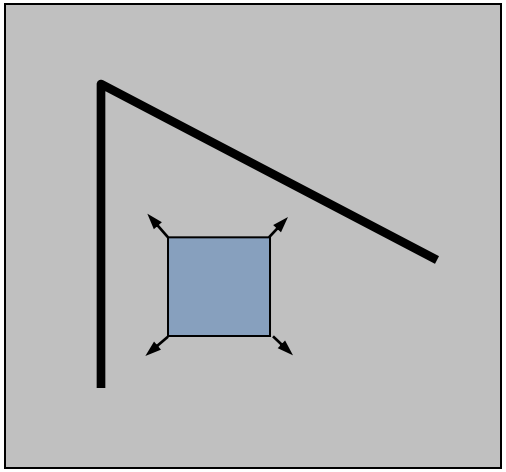

"flat" region:
no change in all directions

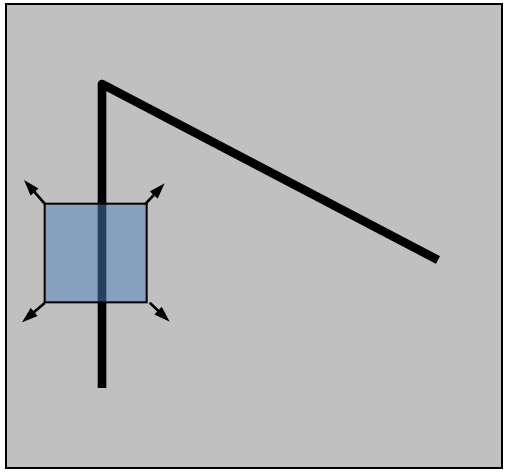

"edge":
no change along the edge direction

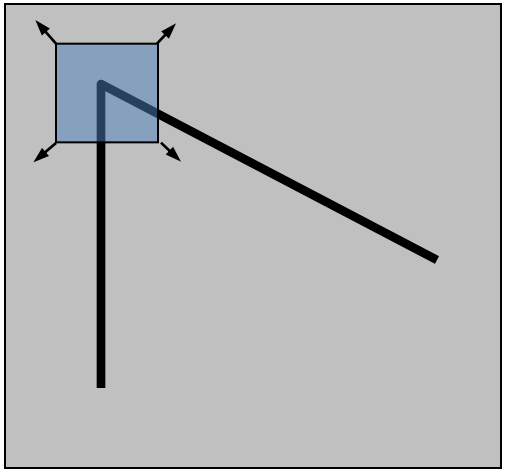

"corner":
significant change in all directions

Credit: S. Seitz, D. Frolova, D. Simakov

Harris corner detection: the math

Consider shifting the window *W* by (*u,v*)

- how do the pixels in W change?
- compare each pixel before and after by summing up the squared differences (SSD)
- this defines an SSD "error" *E*(*u,v*):

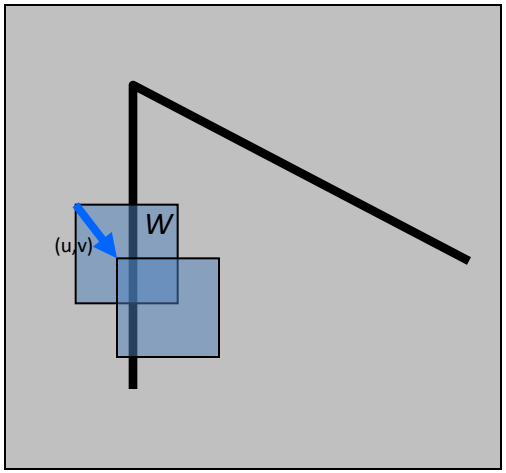

$$E(u,v) = \sum_{(x,y)\in W} [I(x+u, y+v) - I(x,y)]^2$$

- We are happy if this error is high
- Slow to compute exactly for each pixel and each offset (u,v)

Small motion assumption

Taylor Series expansion of *I*:

$$I(x+u, y+v) = I(x,y) + \frac{\partial I}{\partial x}u + \frac{\partial I}{\partial y}v + \text{higher order terms}$$

If the motion (u,v) is small, then first order approximation is good

$$\begin{aligned} I(x+u, y+v) &\approx I(x,y) + \frac{\partial I}{\partial x}u + \frac{\partial I}{\partial y}v \\ &\approx I(x,y) + [I_x \;\; I_y] \begin{bmatrix} u \\ v \end{bmatrix} \end{aligned}$$

$$\text{shorthand: } I_x = \frac{\partial I}{\partial x}$$

Plugging this into the formula on the previous slide…

Corner detection: the math

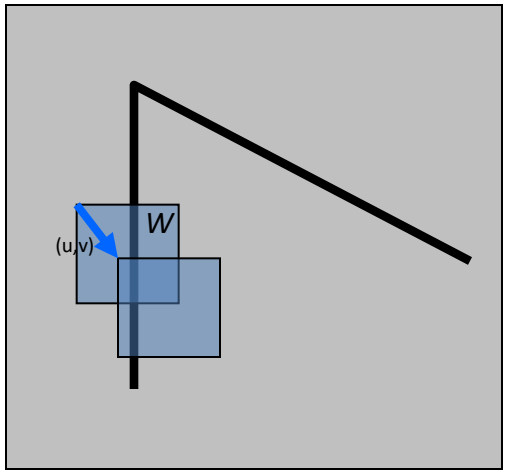

Consider shifting the window *W* by (*u,v*)

- define an SSD "error" *E(u,v)*:

$$
\begin{aligned}
E(u,v) &= \sum_{(x,y)\in W} [I(x+u,y+v) - I(x,y)]^2 \\
&\approx \sum_{(x,y)\in W} [I(x,y) + I_x u + I_y v - I(x,y)]^2 \\
&\approx \sum_{(x,y)\in W} [I_x u + I_y v]^2
\end{aligned}
$$

Corner detection: the math

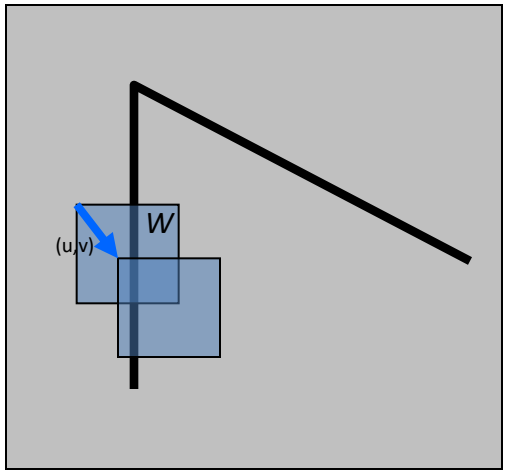

Consider shifting the window *W* by (*u,v*)

- define an SSD "error" *E(u,v)*:

$$E(u,v) \approx \sum_{(x,y)\in W} [I_x u + I_y v]^2$$

$$\approx Au^2 + 2Buv + Cv^2$$

$$A = \sum_{(x,y)\in W} I_x^2 \qquad B = \sum_{(x,y)\in W} I_x I_y \qquad C = \sum_{(x,y)\in W} I_y^2$$

Corner detection: the math

The surface $E(u,v)$ is locally approximated:

$$E(u,v) \approx Au^2 + 2Buv + Cv^2$$

$$\approx \begin{bmatrix} u & v \end{bmatrix} \underbrace{\begin{bmatrix} A & B \\ B & C \end{bmatrix}}_{H} \begin{bmatrix} u \\ v \end{bmatrix}$$

$$A = \sum_{(x,y)\in W} I_x^2$$

$$B = \sum_{(x,y)\in W} I_x I_y$$

$$C = \sum_{(x,y)\in W} I_y^2$$

$$E(u,v) \approx \begin{bmatrix} u & v \end{bmatrix} \underbrace{\begin{bmatrix} A & B \\ B & C \end{bmatrix}}_{H} \begin{bmatrix} u \\ v \end{bmatrix}$$

$$A = \sum_{(x,y)\in W} I_x^2$$

$$B = \sum_{(x,y)\in W} I_x I_y$$

$$C = \sum_{(x,y)\in W} I_y^2$$

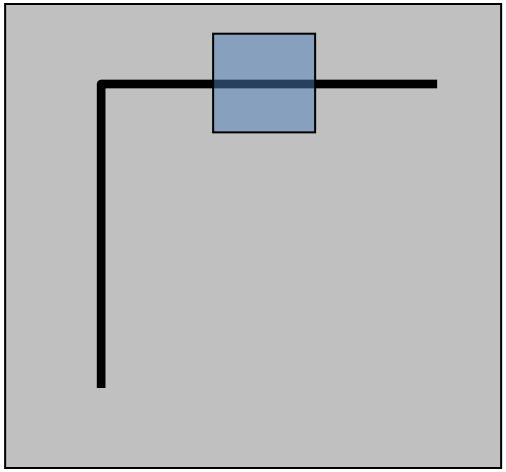

Horizontal edge: $I_x = 0$

$$H = \begin{bmatrix} 0 & 0 \\ 0 & C \end{bmatrix}$$

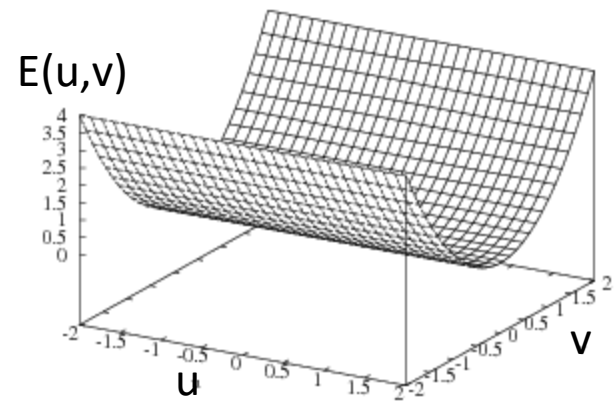

$$E(u,v) \approx \begin{bmatrix} u & v \end{bmatrix} \underbrace{\begin{bmatrix} A & B \\ B & C \end{bmatrix}}_{H} \begin{bmatrix} u \\ v \end{bmatrix}$$

$$A = \sum_{(x,y)\in W} I_x^2$$

$$B = \sum_{(x,y)\in W} I_x I_y$$

$$C = \sum_{(x,y)\in W} I_y^2$$

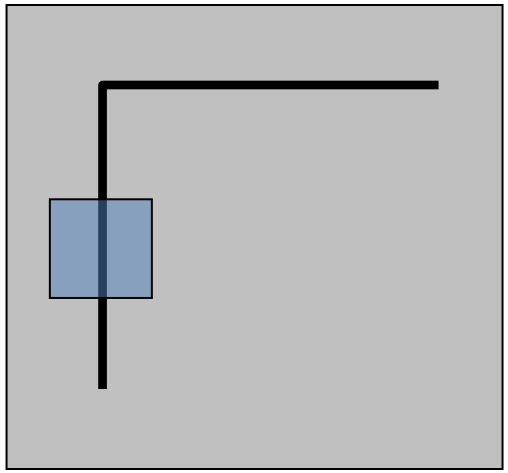

Vertical edge: $I_y = 0$

$$H = \begin{bmatrix} A & 0 \\ 0 & 0 \end{bmatrix}$$

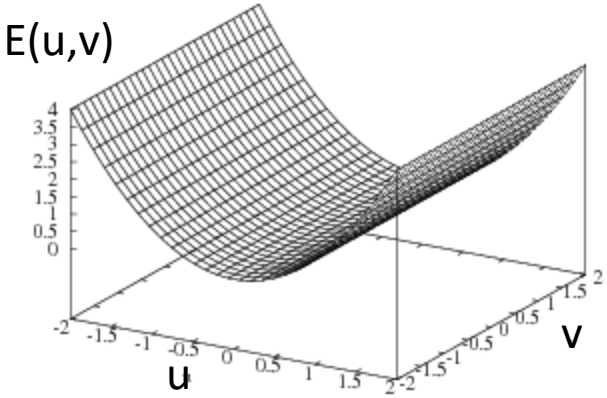

Quick eigenvalue/eigenvector review

The **eigenvectors** of a matrix **A** are the vectors **x** that satisfy:

$$Ax = \lambda x$$

The scalar λ is the **eigenvalue** corresponding to **x**

- The eigenvalues are found by solving:

$$det(A - \lambda I) = 0$$

- In our case, ***A*** = ***H*** is a 2x2 matrix, so we have

$$det \begin{bmatrix} h_{11} - \lambda & h_{12} \\ h_{21} & h_{22} - \lambda \end{bmatrix} = 0$$

- The solution:

$$\lambda_{\pm} = \frac{1}{2}\left[(h_{11} + h_{22}) \pm \sqrt{4h_{12}h_{21} + (h_{11} - h_{22})^2}\right]$$

Interpreting the eigenvalues

Classification of image points using eigenvalues of *H*:

$R = \lambda_1 \lambda_2 - k(\lambda_1 + \lambda_2)^2$

R is large for corner
R is negative (with large magnitude) for edge
R is small for flat region
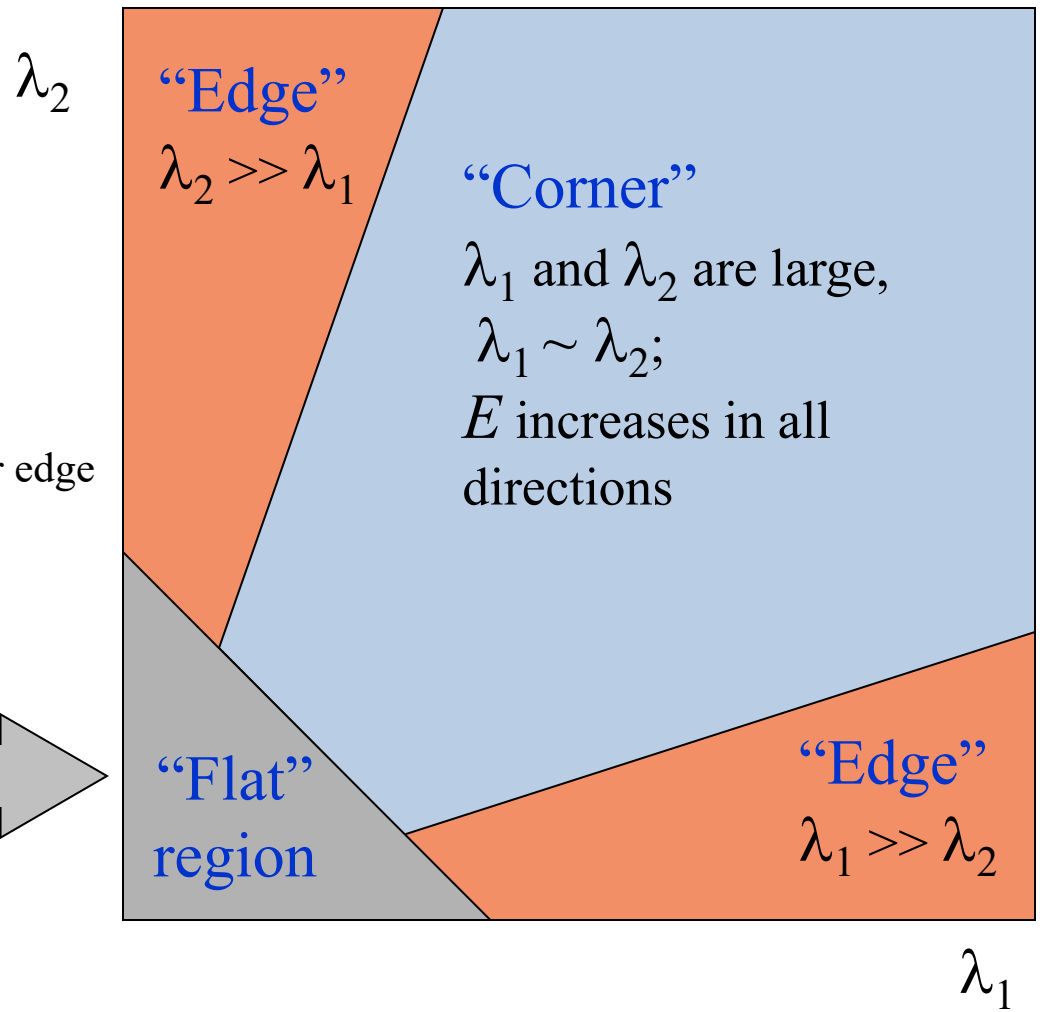
λ_1 and λ_2 are small;
E is almost constant
in all directions