Local measures of uniqueness

Suppose we only consider a small window of pixels

- What defines whether a feature is a good or bad candidate?

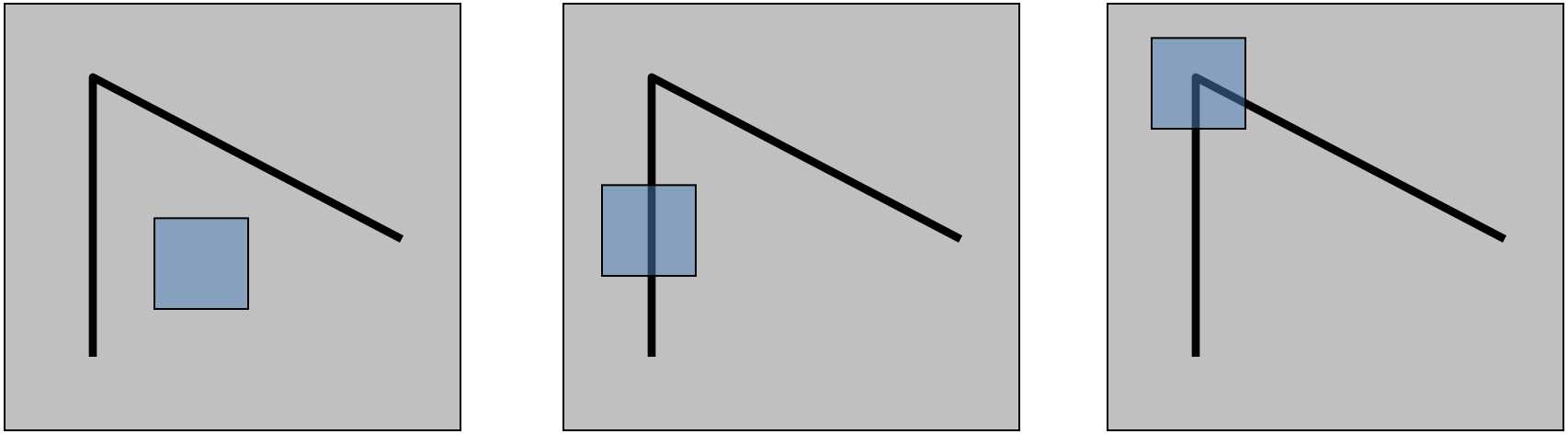

Credit: S. Seitz, D. Frolova, D. Simakov

Local measure of feature uniqueness

- How does the window change when you shift it?
- Shifting the window in any direction causes a big change

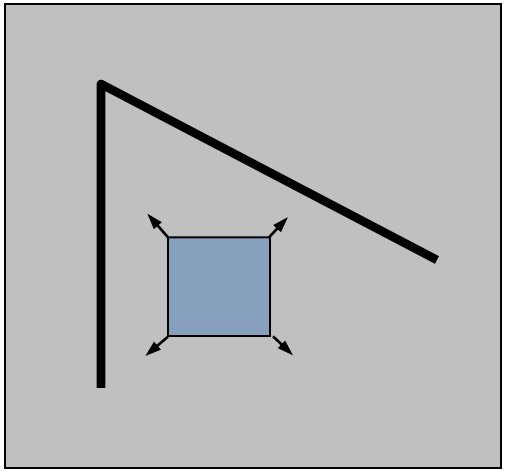

"flat" region:
no change in all directions

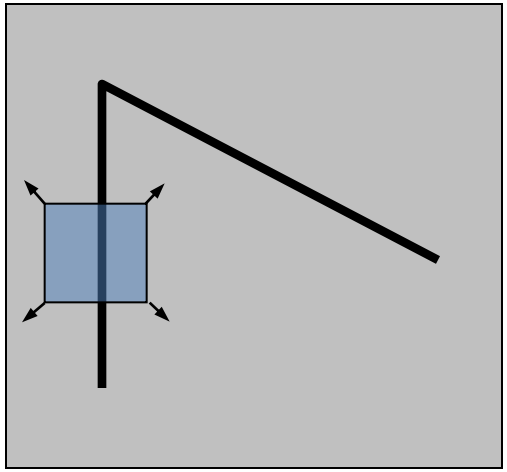

"edge":
no change along the edge direction

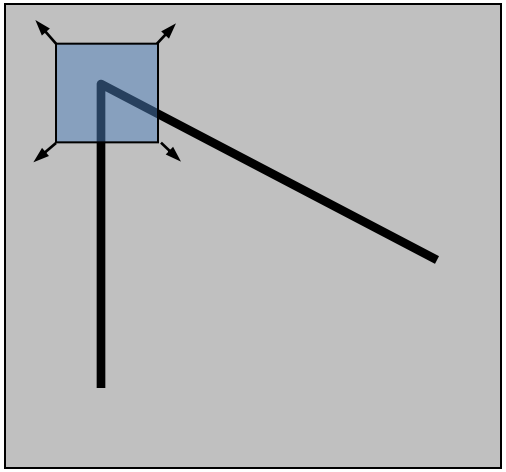

"corner":
significant change in all directions

Credit: S. Seitz, D. Frolova, D. Simakov

Harris corner detection: the math

Consider shifting the window *W* by (*u,v*)

- how do the pixels in W change?
- compare each pixel before and after by summing up the squared differences (SSD)
- this defines an SSD "error" *E*(*u,v*):

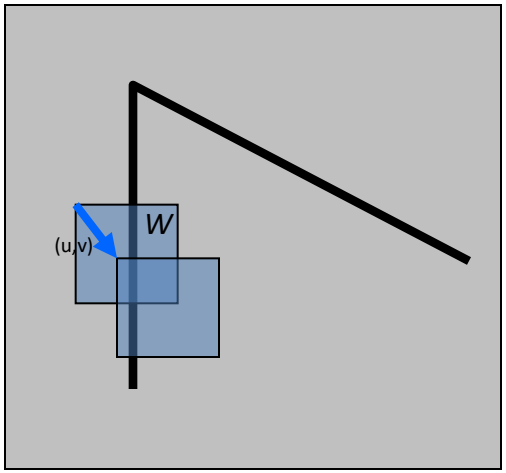

$$E(u,v) = \sum_{(x,y)\in W} [I(x+u, y+v) - I(x,y)]^2$$

- We are happy if this error is high
- Slow to compute exactly for each pixel and each offset (u,v)

Small motion assumption

Taylor Series expansion of *I*:

$$I(x+u, y+v) = I(x,y) + \frac{\partial I}{\partial x}u + \frac{\partial I}{\partial y}v + \text{higher order terms}$$

If the motion (u,v) is small, then first order approximation is good

$$\begin{aligned} I(x+u, y+v) &\approx I(x,y) + \frac{\partial I}{\partial x}u + \frac{\partial I}{\partial y}v \\ &\approx I(x,y) + [I_x \;\; I_y] \begin{bmatrix} u \\ v \end{bmatrix} \end{aligned}$$

$$\text{shorthand: } I_x = \frac{\partial I}{\partial x}$$

Plugging this into the formula on the previous slide…

Corner detection: the math

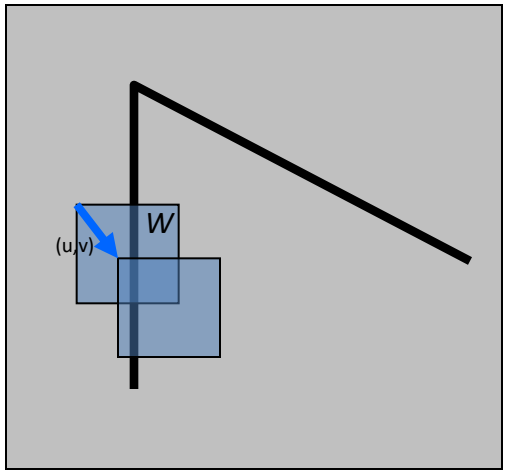

Consider shifting the window *W* by (*u,v*)

- define an SSD "error" *E(u,v)*:

$$
\begin{aligned}
E(u,v) &= \sum_{(x,y)\in W} [I(x+u,y+v) - I(x,y)]^2 \\
&\approx \sum_{(x,y)\in W} [I(x,y) + I_x u + I_y v - I(x,y)]^2 \\
&\approx \sum_{(x,y)\in W} [I_x u + I_y v]^2
\end{aligned}
$$

Corner detection: the math

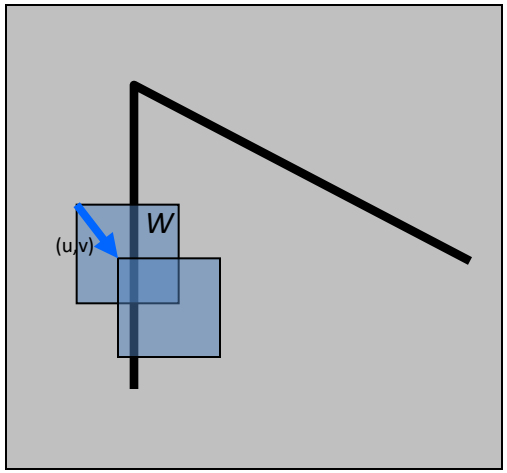

Consider shifting the window *W* by (*u,v*)

- define an SSD "error" *E(u,v)*:

$$E(u,v) \approx \sum_{(x,y)\in W} [I_x u + I_y v]^2$$

$$\approx Au^2 + 2Buv + Cv^2$$

$$A = \sum_{(x,y)\in W} I_x^2 \qquad B = \sum_{(x,y)\in W} I_x I_y \qquad C = \sum_{(x,y)\in W} I_y^2$$

Corner detection: the math

The surface $E(u,v)$ is locally approximated:

$$E(u,v) \approx Au^2 + 2Buv + Cv^2$$

$$\approx \begin{bmatrix} u & v \end{bmatrix} \underbrace{\begin{bmatrix} A & B \\ B & C \end{bmatrix}}_{H} \begin{bmatrix} u \\ v \end{bmatrix}$$

$$A = \sum_{(x,y)\in W} I_x^2$$

$$B = \sum_{(x,y)\in W} I_x I_y$$

$$C = \sum_{(x,y)\in W} I_y^2$$

Interpreting the eigenvalues

Classification of image points using eigenvalues of *H*:

$R = \lambda_1 \lambda_2 - k(\lambda_1 + \lambda_2)^2$

R is large for corner
R is negative (with large magnitude) for edge
R is small for flat region

λ_1 and λ_2 are small;
E is almost constant
in all directions

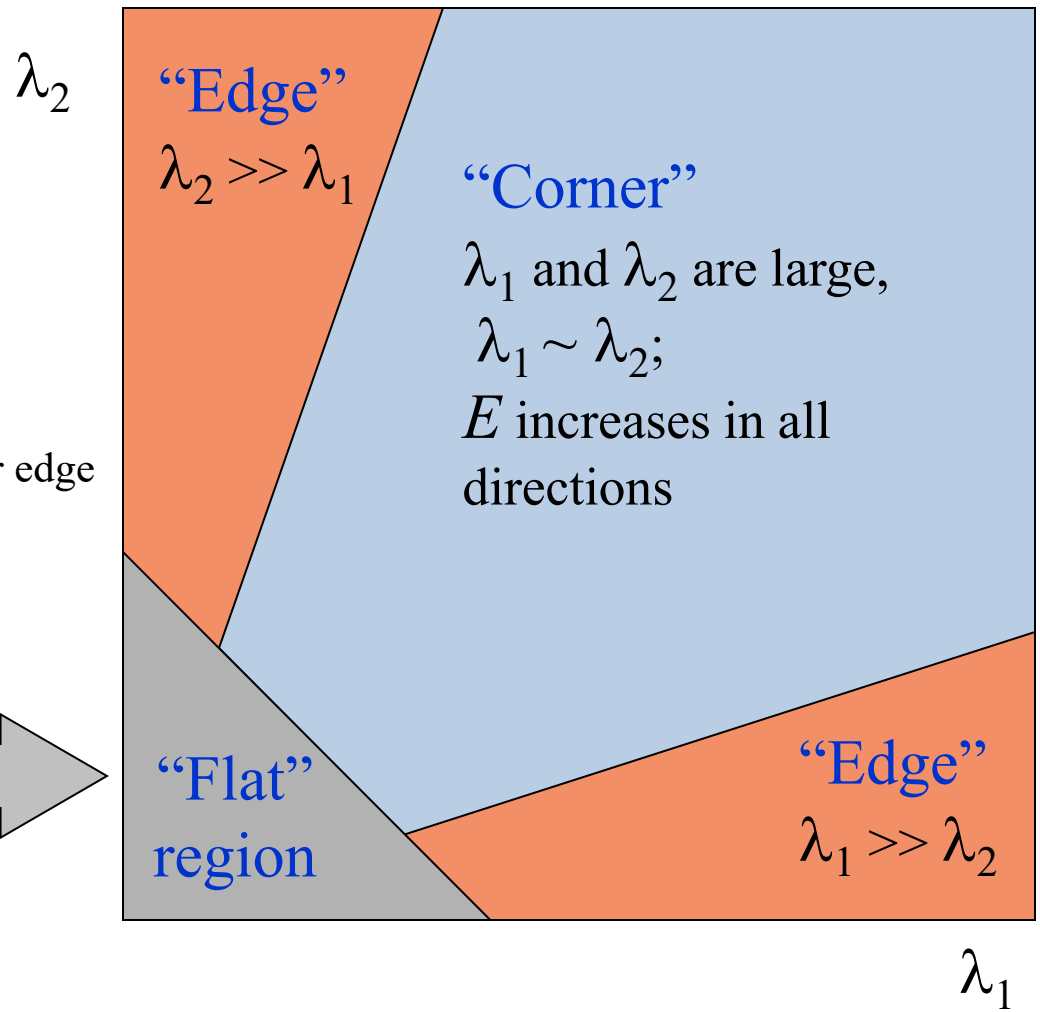

Other Versions of The Harris operator

$$f = \frac{\lambda_1 \lambda_2}{\lambda_1 + \lambda_2}$$

$$= \frac{determinant(H)}{trace(H)}$$

λ_{min} is a variant of the “Harris operator” for feature detection

Harris detector: Invariance properties -- Image translation

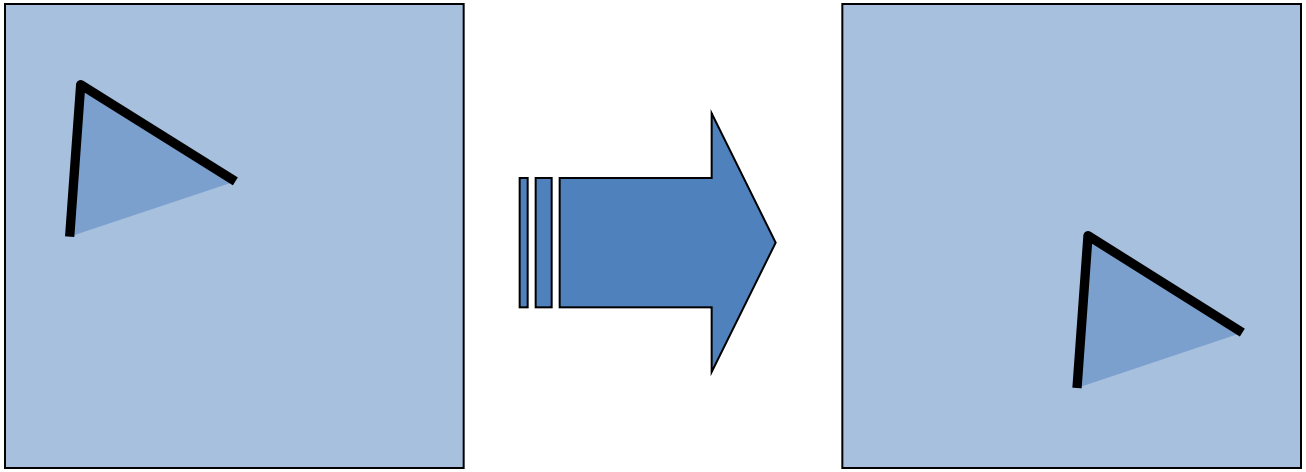

- Derivatives and window function are shift-invariant

Harris detector: Invariance properties – Affine intensity change

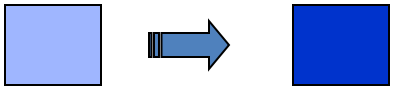

$I \rightarrow a\,I + b$

- Only derivatives are used => invariance to intensity shift $I \rightarrow I + b$
- Intensity scaling: $I \rightarrow a\,I$

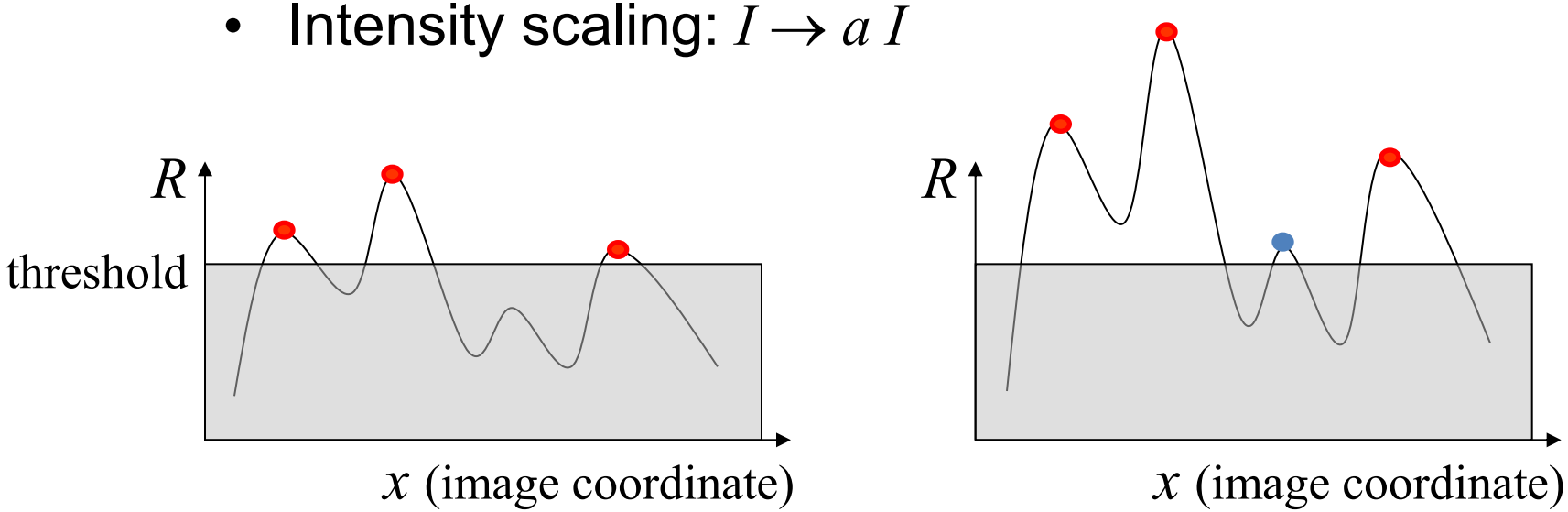

Partially invariant to affine intensity change

Harris Detector: Invariance Properties

- Scaling

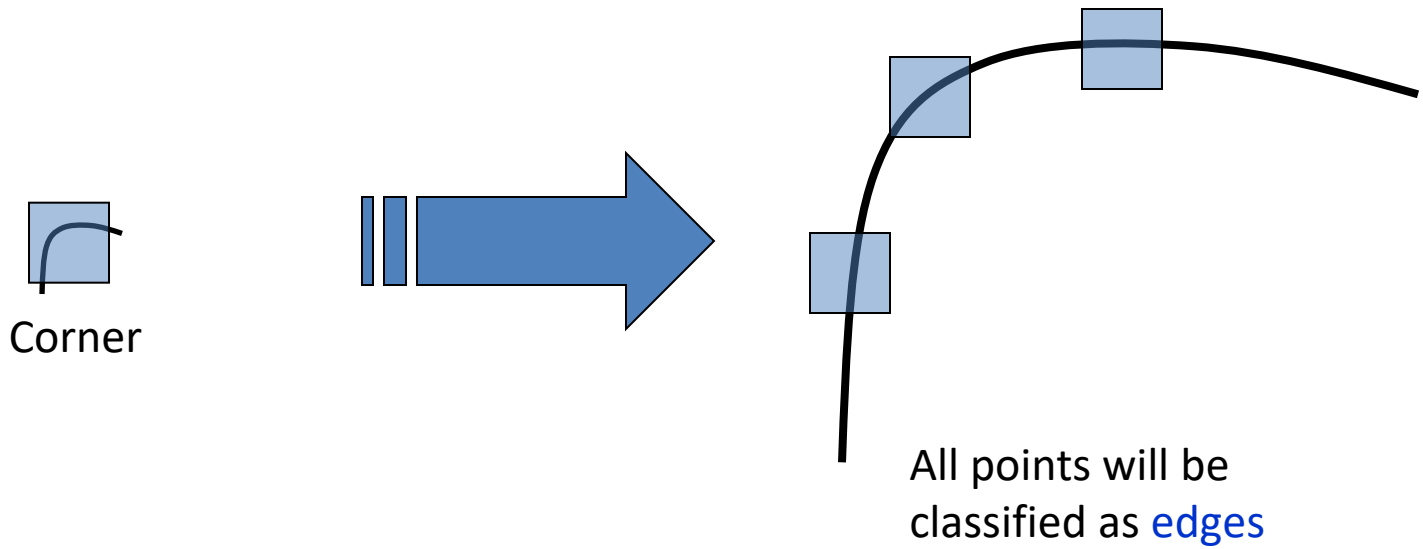

Not invariant to scaling

Scale invariant detection

Suppose you're looking for corners

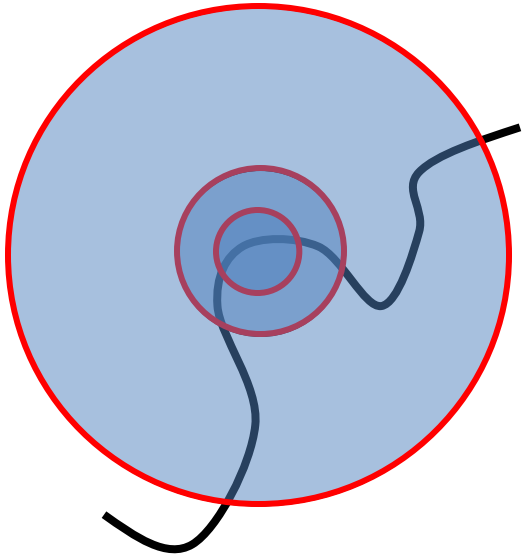

Key idea: find scale that gives local maximum of *f*

- in both position and scale
- One definition of *f*: the Harris operator

Implementation

- Instead of computing *f* for larger and larger windows, we can implement using a fixed window size with a Gaussian pyramid

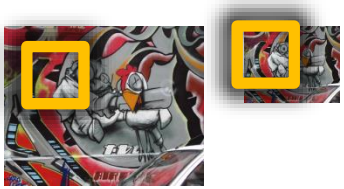

(sometimes need to create in-between levels, e.g. a ¾-size image)

LoG-DoG (Difference of Gaussian)

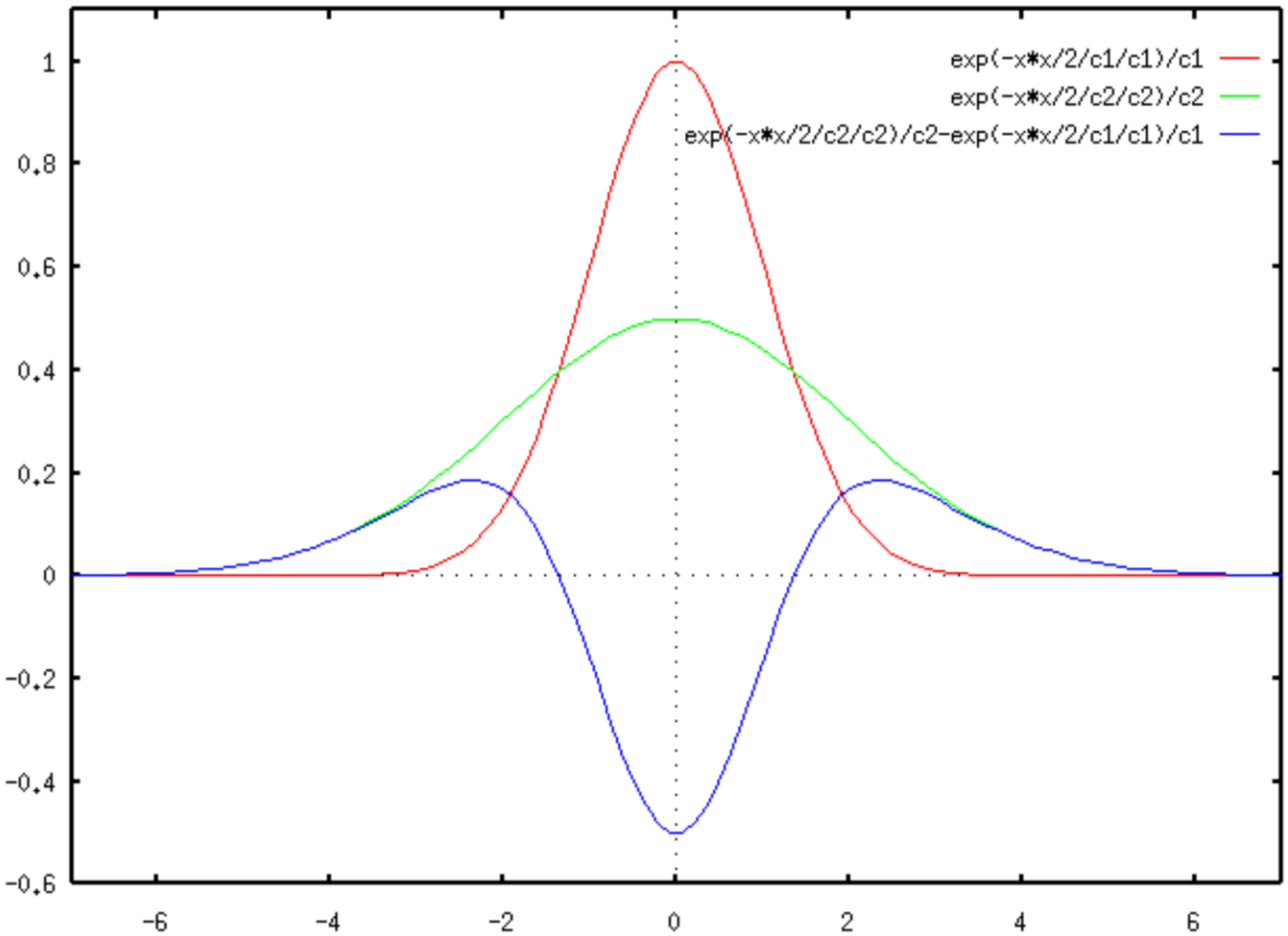

LoG can be approximated by a difference of two Gaussians (DoG) at different scales

Adapted from Wiki

Laplacian of Gaussian

- “Blob” detector

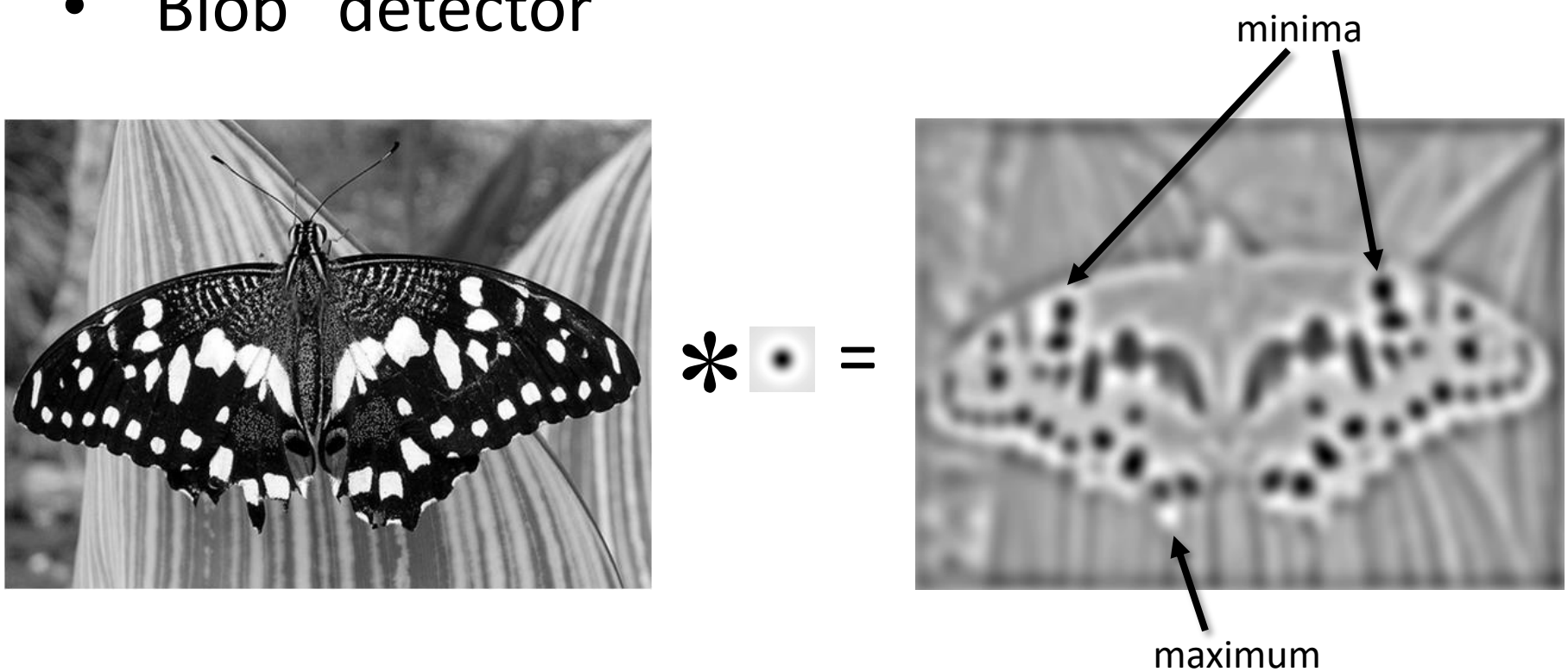

- Find maxima *and minima* of LoG operator in space and scale

Find local maxima in position-scale space

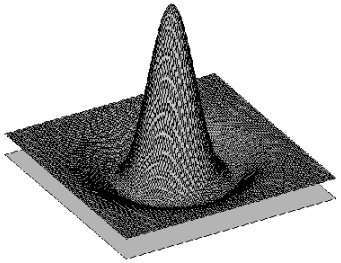

$$L_{xx}(\sigma) + L_{yy}(\sigma) \rightarrow$$

σ^5

σ^4

σ^3

σ^2

σ

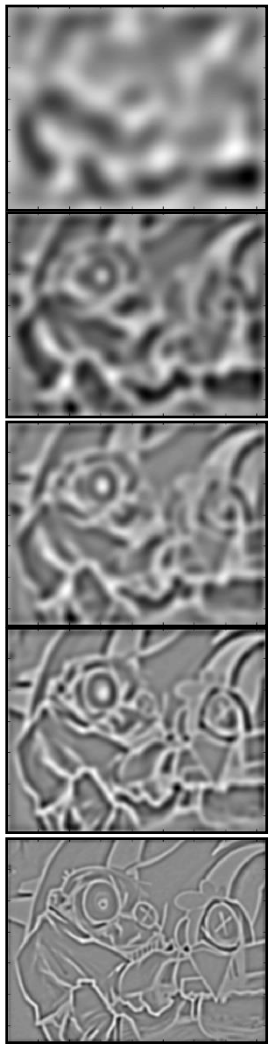

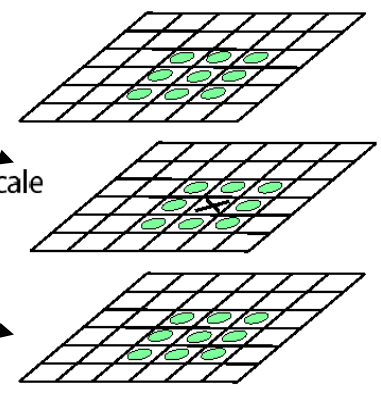

$\Rightarrow$ **List of**
(x, y, s)

K. Grauman, B. Leibe