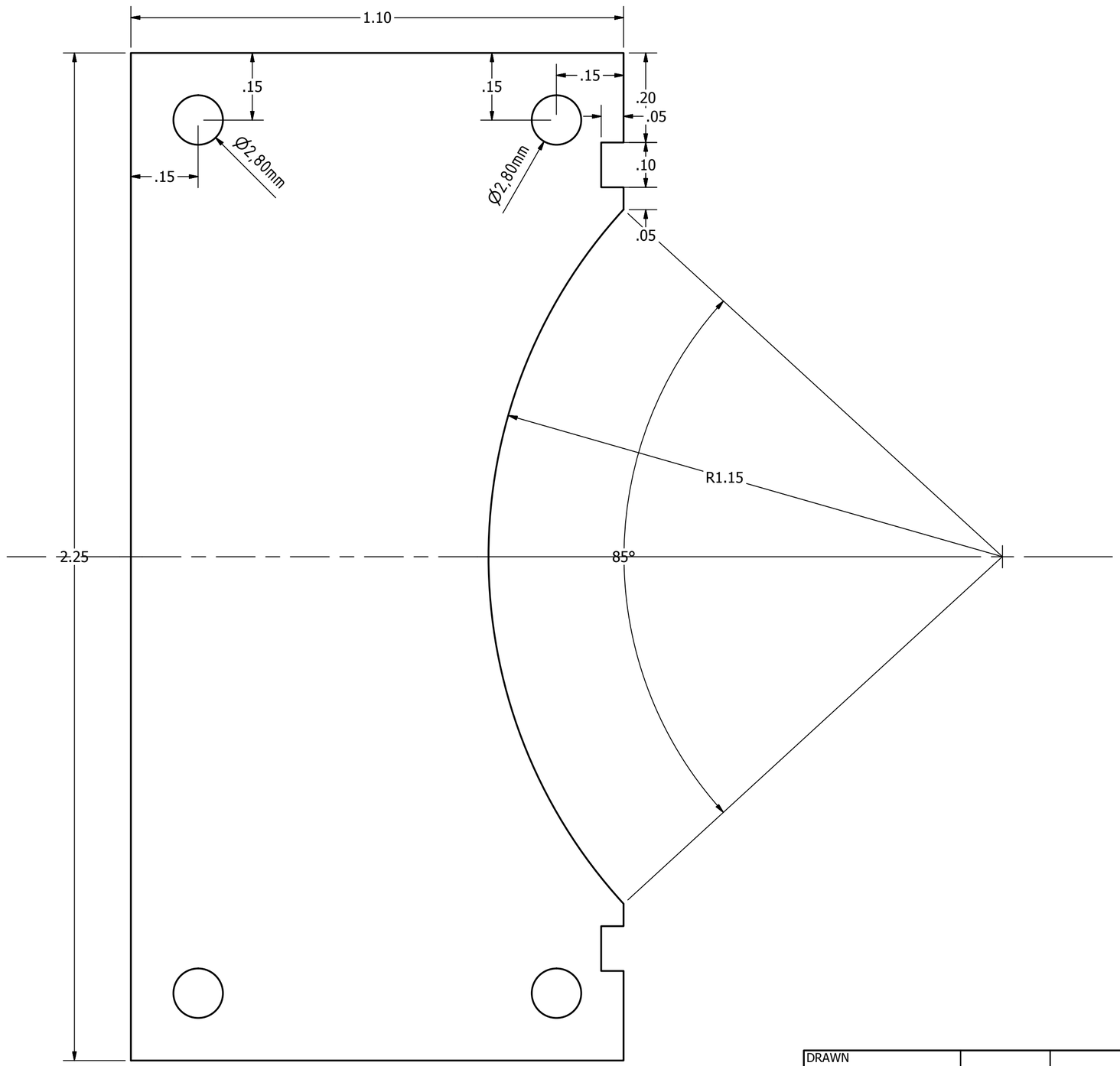

DRAWN Sebastian	14.07.2014	
CHECKED		TITLE
QA		AXIOM Beta IO Module Dimensions
MFG		
APPROVED		
		SIZE C / DWG NO PCBModuleLeft01 / REV
		SCALE / SHEET 1 OF 1