BATTERY CONNECTOR AND SWITCH

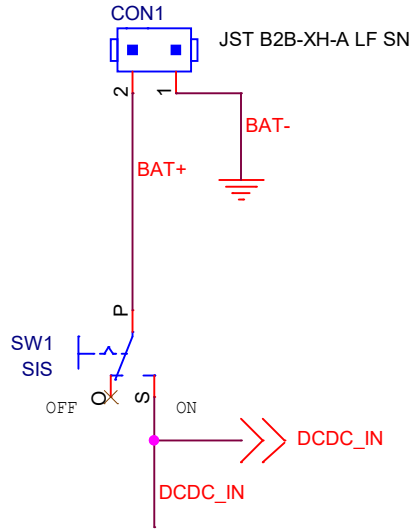

**The switch is not a side switch but a surface switch but still better be placed close to the edge of PCB for more optimize board organization

VOLTAGE REGULATOR

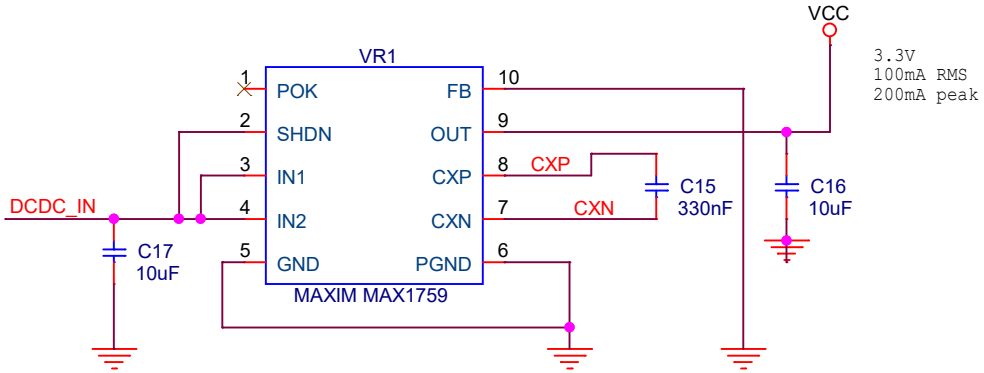

**Place caps close to MAX1759 pins

Comments

**MAX1555 draws 280 mA from DC pin when charging
**MAX1555 battery leakage current is <5 uA

**The USB must be placed in the edge of the PCB

**LED on: battery is charging

**Place caps within 1 cm from MAX1555 pins

**Place C19 close to pins 2 and 3

BATTERY CHARGER

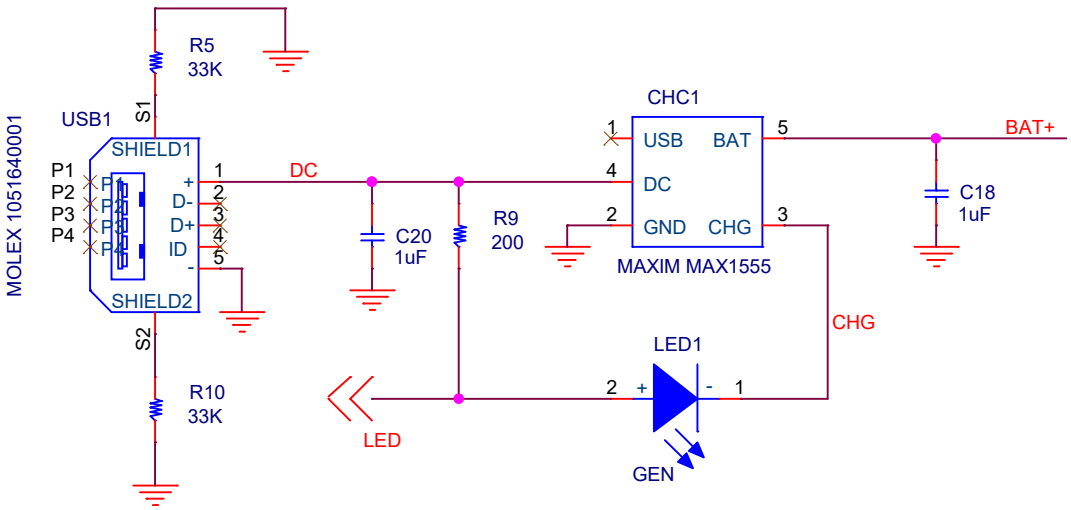

**Data output from LED to the microcontroller DIO in order to indicate "charging" status to be sent to the software

FUEL GAUGE

Iq = 3uA Hibernate
Iq = 23uA Active

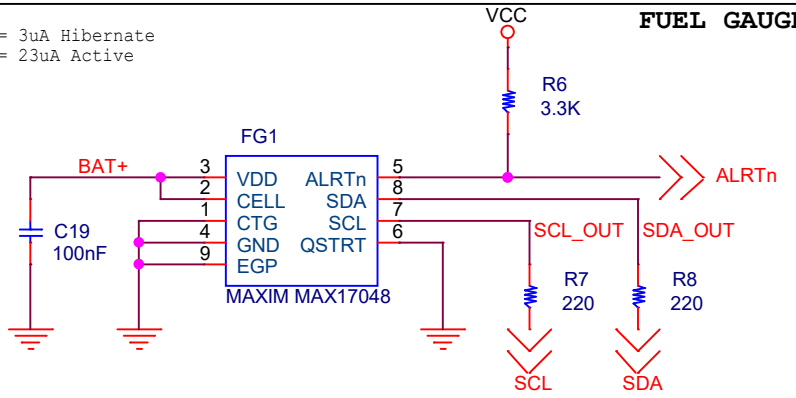

Title: Power Management		
Size: A	Document Number: Reza_Khoshzaban Pouyan_Asgari	Rev: 1.4
Date: Thursday, April 27, 2023	Sheet 3 of 3	