Microcontroller

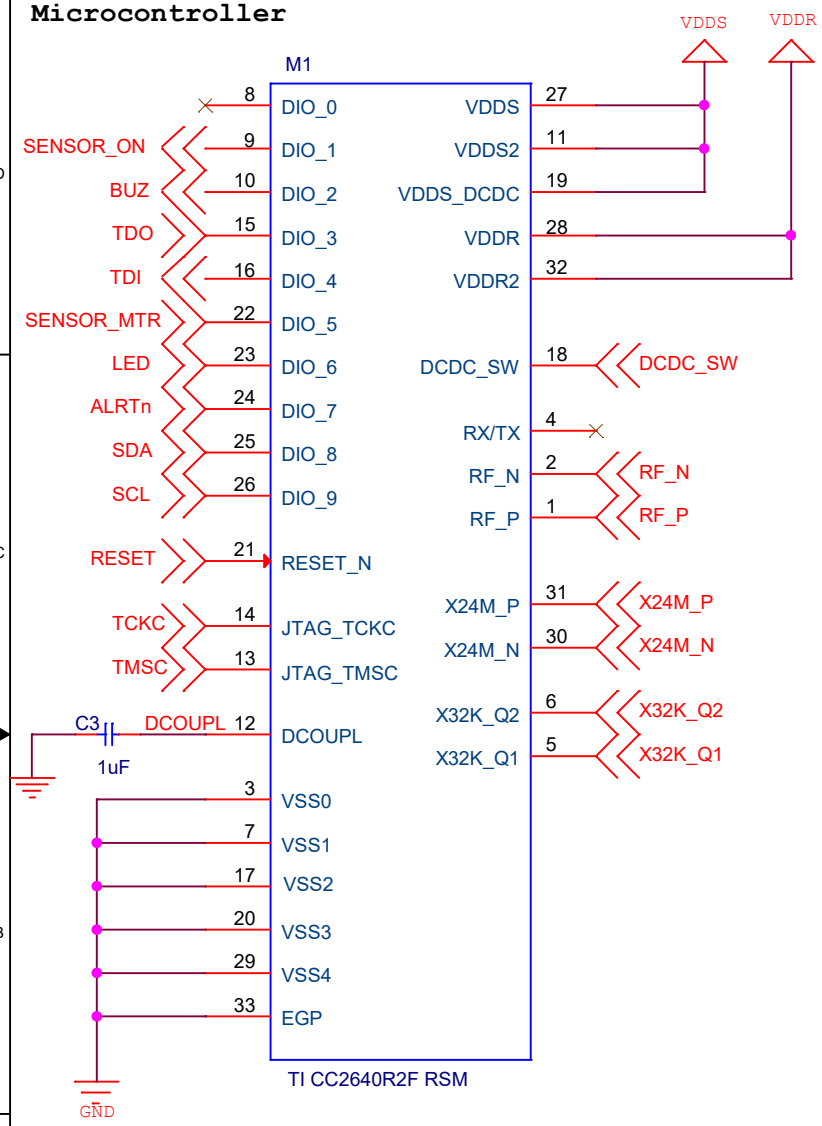

Comments

**The Microcontroller has internal capacitor array for 24 MHz crystal (CYS1)

**Microcontroller :
Active-Mode RX: 5.9 mA
Active-Mode TX at 0 dBm: 6.1 mA
Active-Mode TX at +5 dBm: 9.1 mA
Active-Mode MCU: 61 µA/MHz
Active-Mode MCU: 48.5 CoreMark/mA
Active-Mode Sensor Controller:
0.4mA + 8.2 µA/MHz
Standby: 1.1 µA (RTC Running and RAM/CPU Retention)
Shutdown: 100 nA (Wake Up on External Events)

**The antenna should have a straight root to pin RF_N thus it should be placed in the same side as the RF_N pin of the Microcontroller and not so far away from the Microcontroller

Crystals

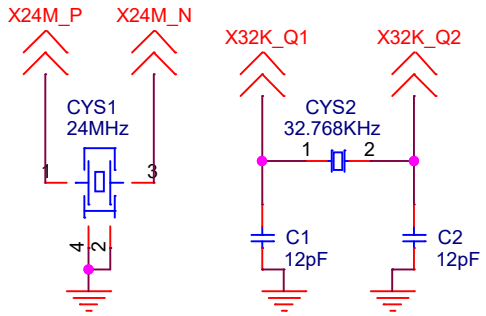

**The number of pins which the decoupling capacitors are intended for are mentioned the decoupling circuitry block

**Place all decoupling capacitors close to their respective pins with multiple vias to ground

Decoupling Circuitry

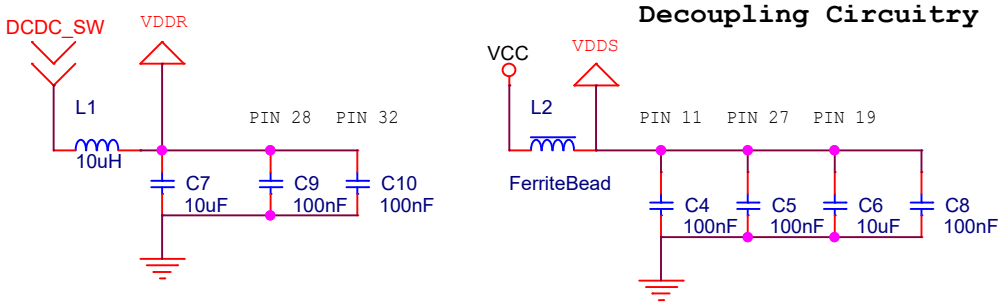

VDDR decoupling circuitry

VDDS decoupling circuitry

Bluetooth Antenna

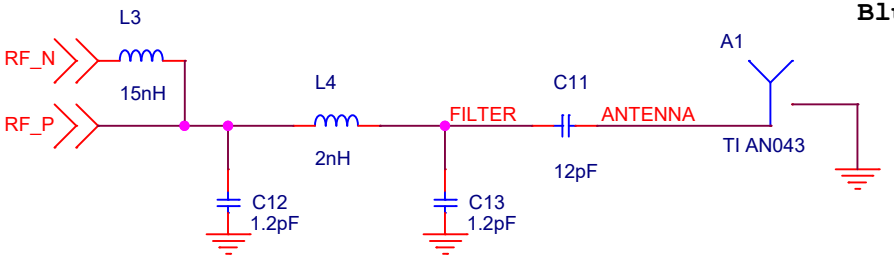

Title	Microcontroller	
Size A	Document Number Reza_Khoshzaban Pouyan_Asgari	Rev 1.5
Date: Friday, April 28, 2023	Sheet 1 of 3	