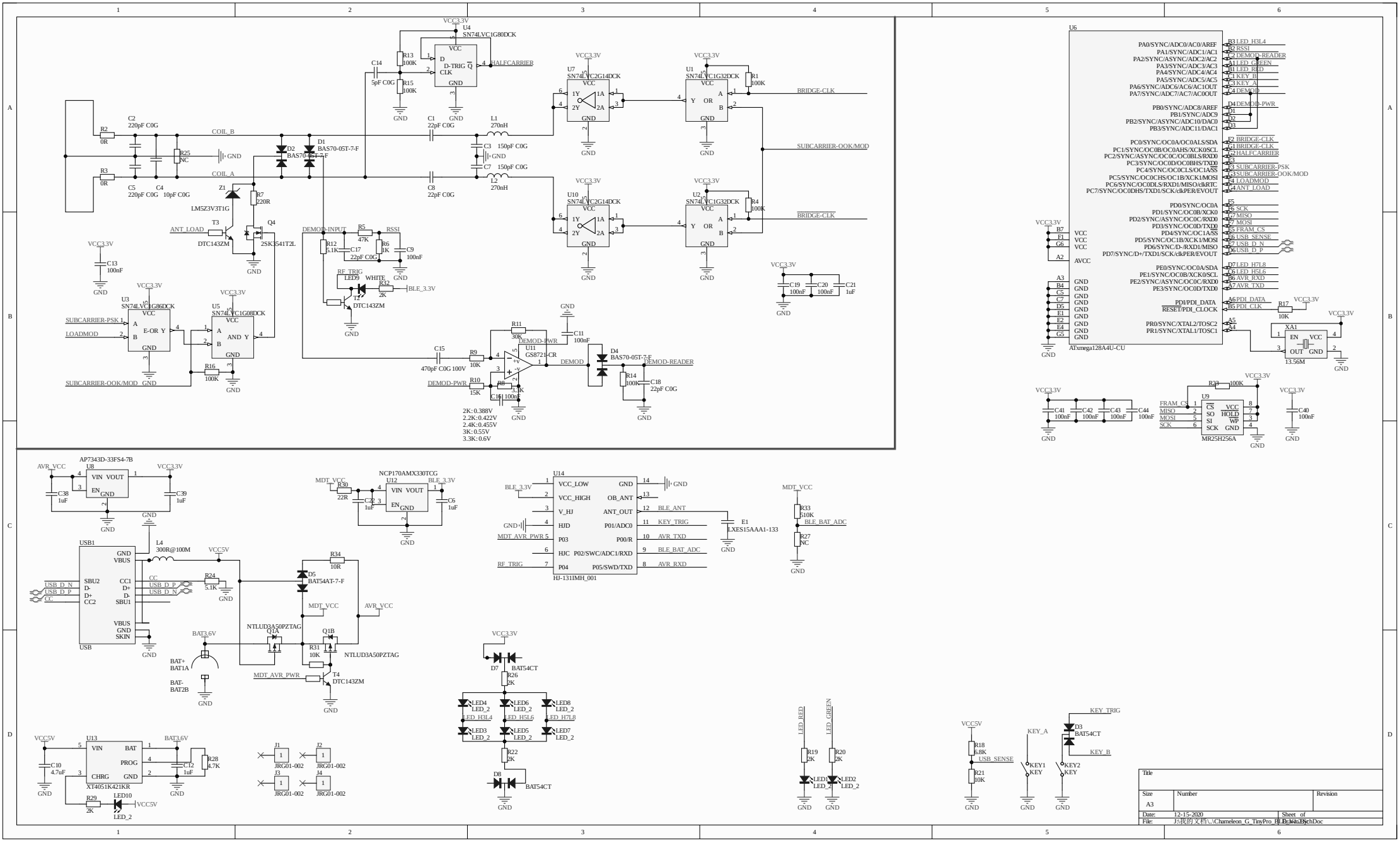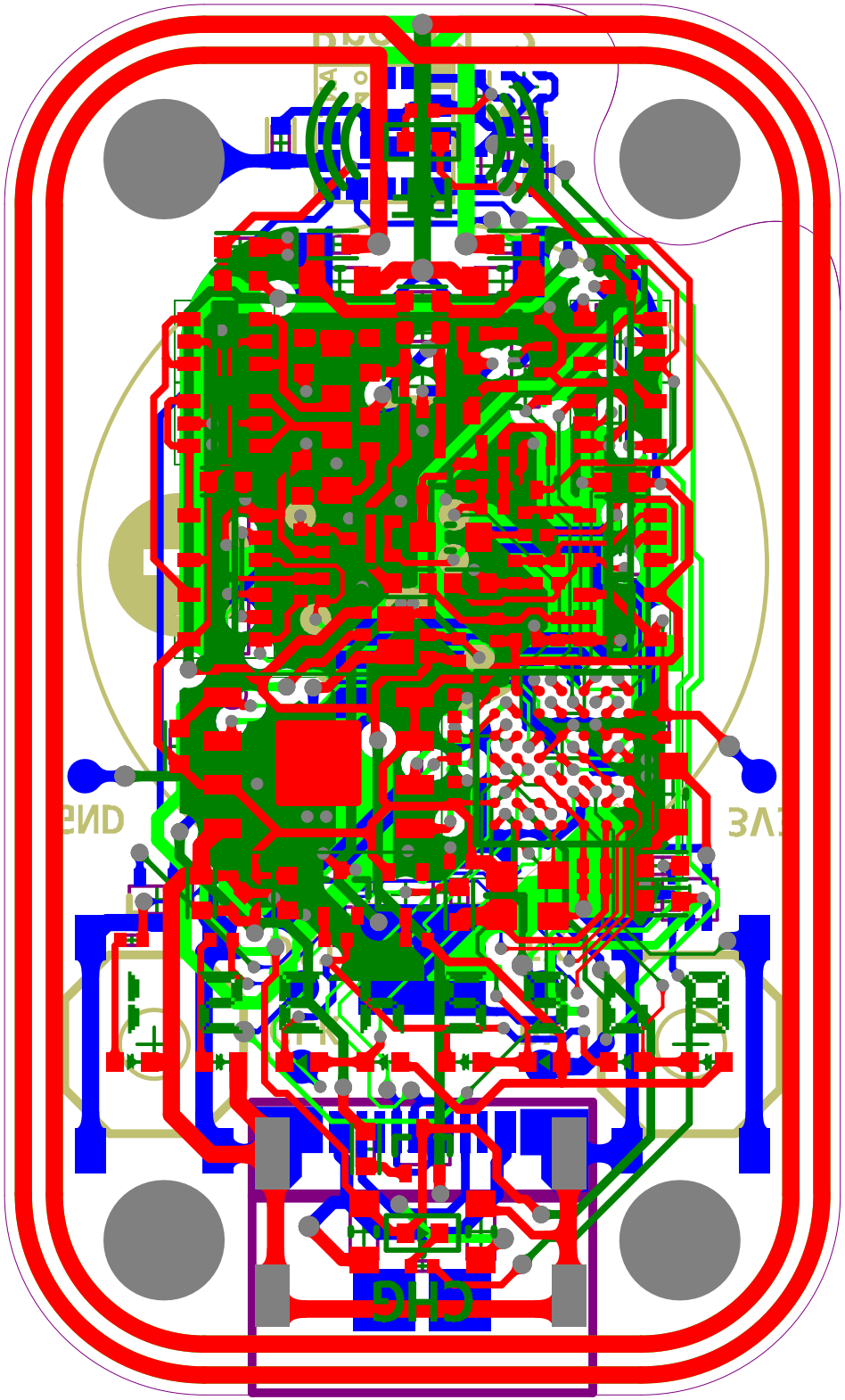
VCC3.3V
U4
SN74LVC1G80DCK
D-TRIG
HALFCARRIER
R13 100K
R15 100K
C14 5pF C0G
C1 22pF C0G
L1 270nH
C3 150pF C0G
C7 150pF C0G
L2 270nH
C8 22pF C0G
C2 220pF C0G
C4 10pF C0G
C5 220pF C0G
R2 0R
R3 0R
R25 NC
COIL_B
COIL_A
D1 BAS70-05T-7-F
D2 BAS70-05T-7-F
Z1 LM5Z3V3T1G
R7 220R
Q4 2SK3541T2L
T3 DTC143ZM
ANT_LOAD
U7 SN74LVC2G14DCK
U10 SN74LVC2G14DCK
U1 SN74LVC1G32DCK
U2 SN74LVC1G32DCK
R1 100K
R4 100K
BRIDGE-CLK
SUBCARRIER-OOK/MOD
DEMOD-INPUT
R5 47K
R6 1K
R12 5.1K
C17 22pF C0G
C9 100nF
RSSI
RF_TRIG
LED9 WHITE
R32 2K
BLE_3.3V
T2 DTC143ZM
C13 100nF
U3 SN74LVC1G86DCK
U5 SN74LVC1G08DCK
SUBCARRIER-PSK
LOADMOD
SUBCARRIER-OOK/MOD
R16 100K
C19 100nF
C20 100nF
C21 1uF
R11 30K
C11 100nF
DEMOD-PWR
U11 GS8721-CR
C15 470pF C0G 100V
R9 10K
R10 15K
R8 3.3K
C16 100nF
DEMOD
D4 BAS70-05T-7-F
DEMOD-READER
R14 100K
C18 22pF C0G
2K:0.388V
2.2K:0.422V
2.4K:0.455V
3K:0.55V
3.3K:0.6V
U6
ATxmega128A4U-CU
PA0/SYNC/ADC0/AC0/AREF
PA1/SYNC/ADC1/AC1
PA2/SYNC/ASYNC/ADC2/AC2
PA3/SYNC/ADC3/AC3
PA4/SYNC/ADC4/AC4
PA5/SYNC/ADC5/AC5
PA6/SYNC/ADC6/AC6/AC1OUT
PA7/SYNC/ADC7/AC7/AC0OUT
PB0/SYNC/ADC8/AREF
PB1/SYNC/ADC9
PB2/SYNC/ASYNC/ADC10/DAC0
PB3/SYNC/ADC11/DAC1
PC0/SYNC/OC0A/OC0ALS/SDA
PC1/SYNC/OC0B/OC0AHS/XCK0/SCL
PC2/SYNC/ASYNC/OC0C/OC0BLS/RXD0
PC3/SYNC/OC0D/OC0BHS/TXD0
PC4/SYNC/OC0CLS/OC1A/SS
PC5/SYNC/OC0CHS/OC1B/XCK1/MOSI
PC6/SYNC/OC0DLS/RXD1/MISO/clkRTC
PC7/SYNC/OC0DHS/TXD1/SCK/clkPER/EVOUT
PD0/SYNC/OC0A
PD1/SYNC/OC0B/XCK0
PD2/SYNC/ASYNC/OC0C/RXD0
PD3/SYNC/OC0D/TXD0
PD4/SYNC/OC1A/SS
PD5/SYNC/OC1B/XCK1/MOSI
PD6/SYNC/D-/RXD1/MISO
PD7/SYNC/D+/TXD1/SCK/clkPER/EVOUT
PE0/SYNC/OC0A/SDA
PE1/SYNC/OC0B/XCK0/SCL
PE2/SYNC/ASYNC/OC0C/RXD0
PE3/SYNC/OC0D/TXD0
PDI/PDI_DATA
RESET/PDI_CLOCK
PR0/SYNC/XTAL2/TOSC2
PR1/SYNC/XTAL1/TOSC1
LED_H3L4
RSSI
DEMOD-READER
LED_GREEN
LED_RED
KEY_B
KEY_A
DEMOD
DEMOD-PWR
BRIDGE-CLK
HALFCARRIER
SUBCARRIER-PSK
SUBCARRIER-OOK/MOD
LOADMOD
ANT_LOAD
SCK
MISO
MOSI
FRAM_CS
USB_SENSE
USB_D_N
USB_D_P
AVR_RXD
AVR_TXD
PDI_DATA
PDI_CLK
R17 10K
XA1
13.56M
C41 100nF
C42 100nF
C43 100nF
C44 100nF
R33 100K
U9
MR25H256A
C40 100nF
AP7343D-33FS4-7B
U8
AVR_VCC
C38 1uF
C39 1uF
NCP170AMX330TCG
U12
MDT_VCC
R30 22R
C22 1uF
C6 1uF
U14
HJ-131IMH_001
VCC_LOW
VCC_HIGH
V_HJ
HJD
P03
HJC
P04
GND
OB_ANT
ANT_OUT
P01/ADC0
P00/R
P02/SWC/ADC1/RXD
P05/SWD/TXD
BLE_ANT
KEY_TRIG
AVR_TXD
BLE_BAT_ADC
AVR_RXD
MDT_AVR_PWR
RF_TRIG
E1 LXES15AAA1-133
R33 510K
R27 NC
USB1
USB
SBU2
D-
D+
CC2
CC1
SBU1
VBUS
SKIN
L4 300R@100M
VCC5V
R24 5.1K
R34 10R
D5 BAT54AT-7-F
NTLUD3A50PZTAG
Q1A
Q1B
R31 10K
T4 DTC143ZM
BAT3.6V
BAT+
BAT1A
BAT-
BAT2B
U13
XT4051K421KR
VIN
BAT
PROG
CHRG
C10 4.7uF
C12 1uF
R28 4.7K
R29 2K
LED10
LED_2
J1 JRG01-002
J2 JRG01-002
J3 JRG01-002
J4 JRG01-002
D7 BAT54CT
R26 2K
LED4 LED_2
LED6 LED_2
LED8 LED_2
LED3 LED_2
LED5 LED_2
LED7 LED_2
R22 2K
D8 BAT54CT
R19 2K
R20 2K
LED1 LED_2
LED2 LED_2
R18 6.8K
R21 10K
KEY1 KEY
KEY2 KEY
D3 BAT54CT
Title
Size A3
Number
Revision
Date: 12-15-2020
Sheet of
File: J:\我的文档\..\Chameleon_G_TinyPro_BLE_Ver2.SchDoc