©RhinoPower Ltd

Rev.	Date

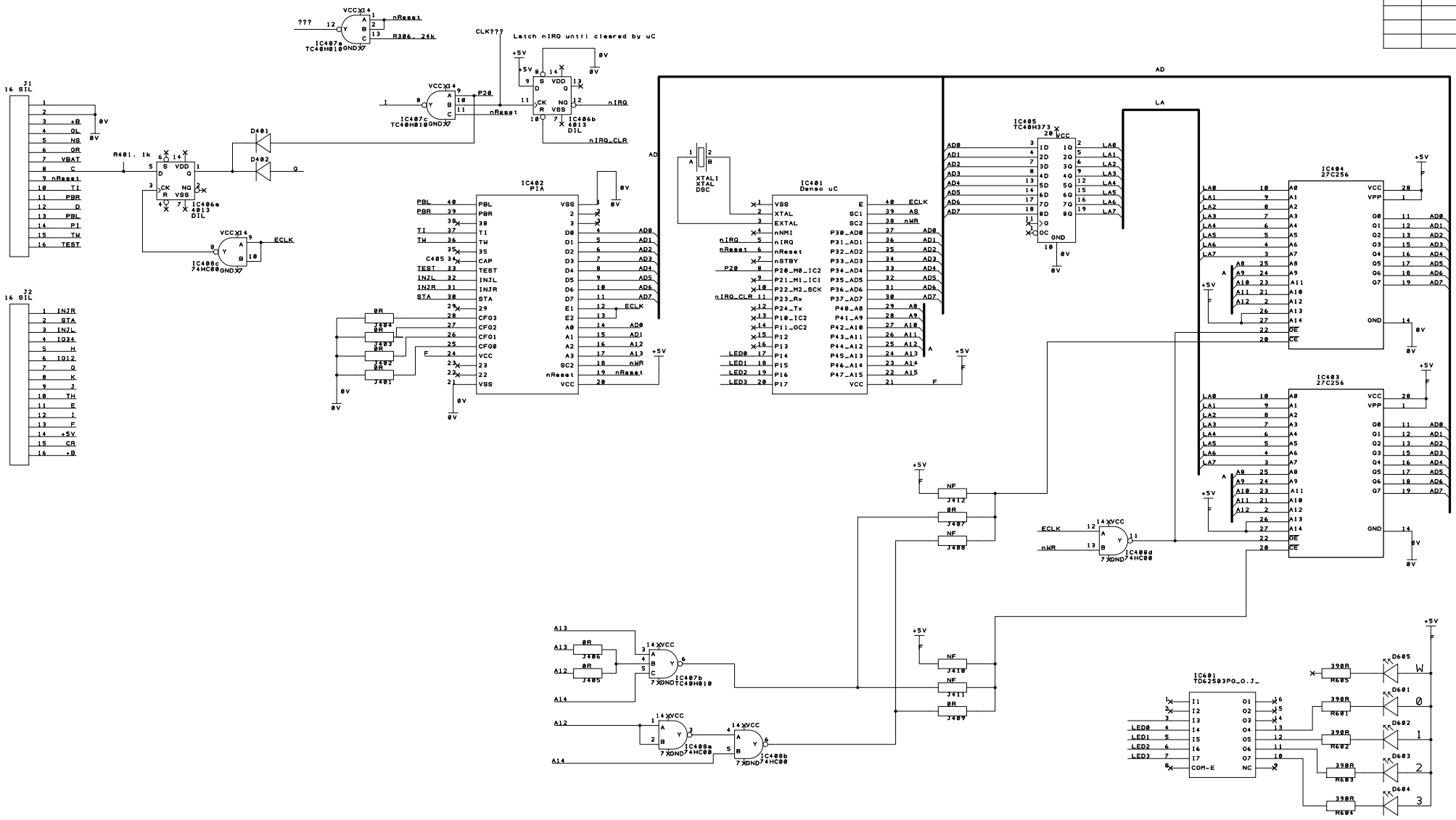

Projection	Project
Do Not Scale	
Drawn	Title
Date	Drawing No. / Sheet of