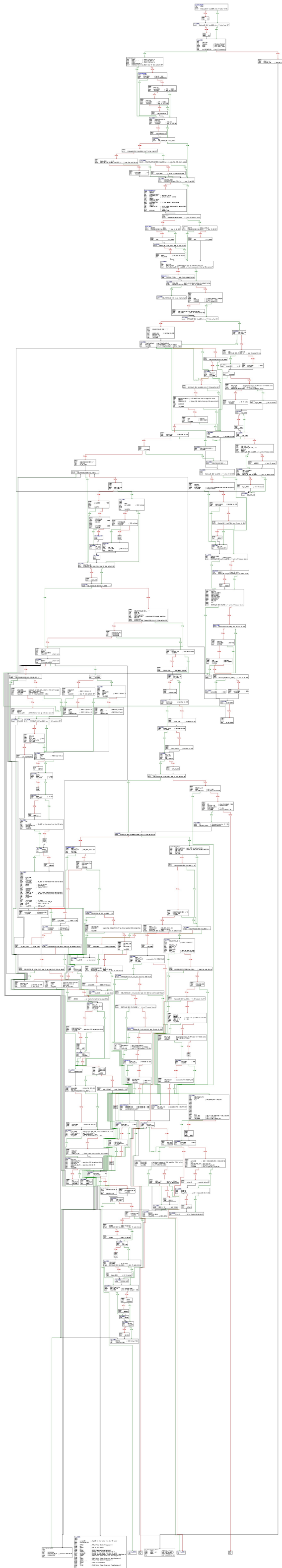Graph of do_ISC_START