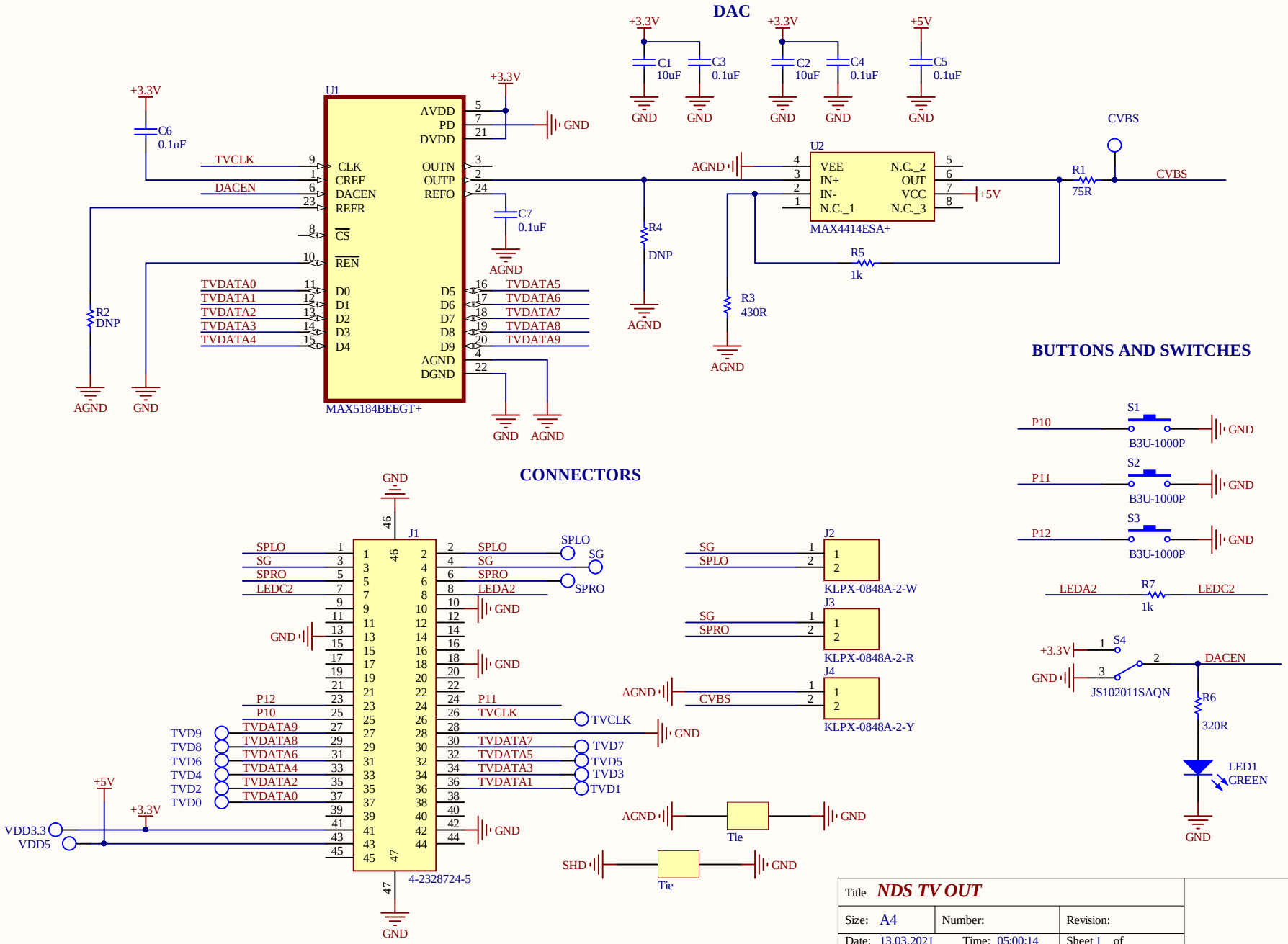

Title	NDS TV OUT		
Size: A4	Number:	Revision:	
Date: 13.03.2021	Time: 05:00:14	Sheet 1 of	
File: D:\Work\Upwork\Breathing Electronics Co\PCB\Schematic.SchDoc			

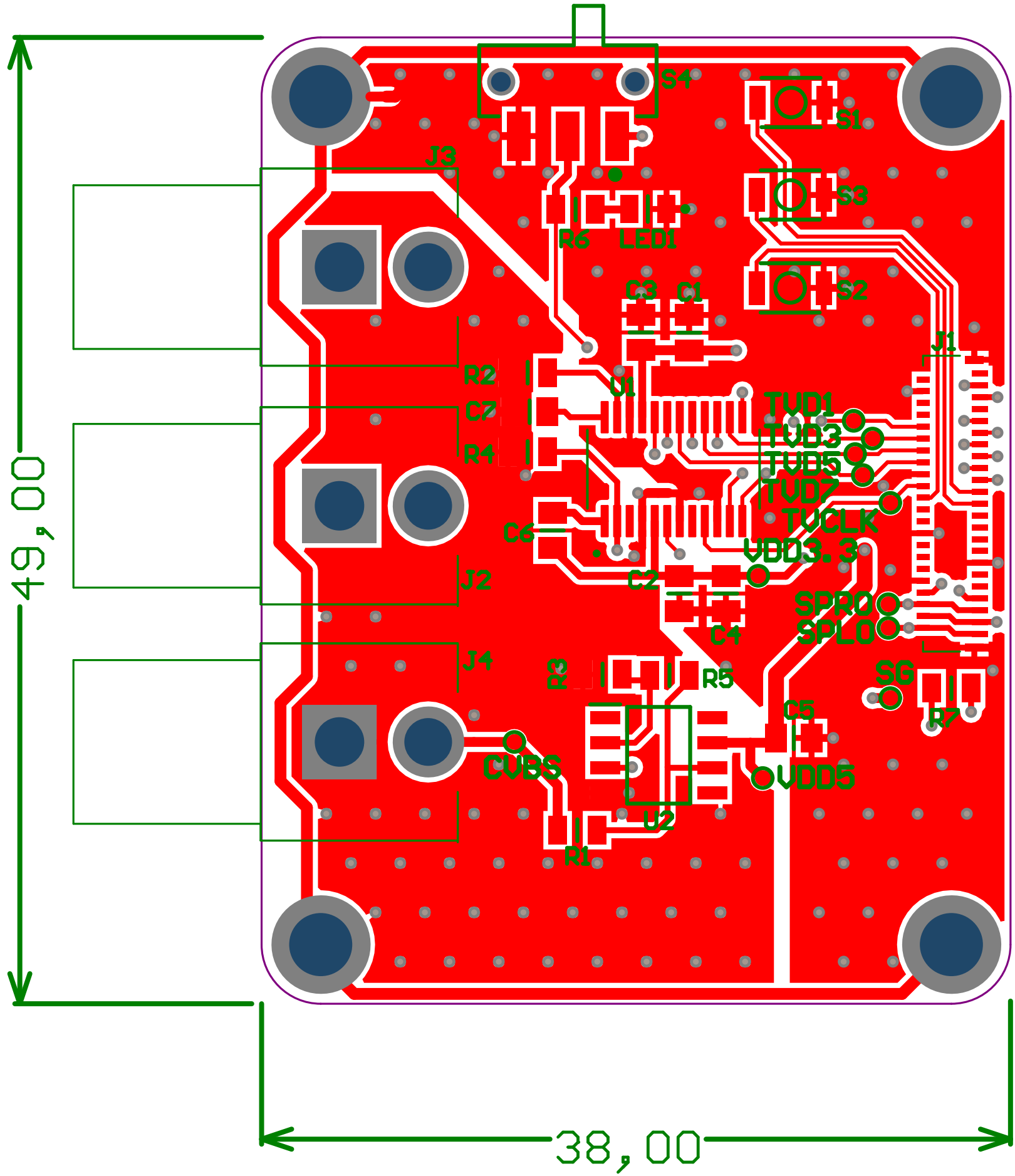
S4
S1
J3
S3
R6
LED1
C3
C1
S2
J1
R2
U1
C7
TVD1
TVD3
R4
TVD5
TVD7
TVCLK
C6
VDD3.3
J2
C2
SPRO
SPLO
C4
J4
R3
R5
SG
C5
R7
CVBS
VDD5
U2
R1
49,00
38,00

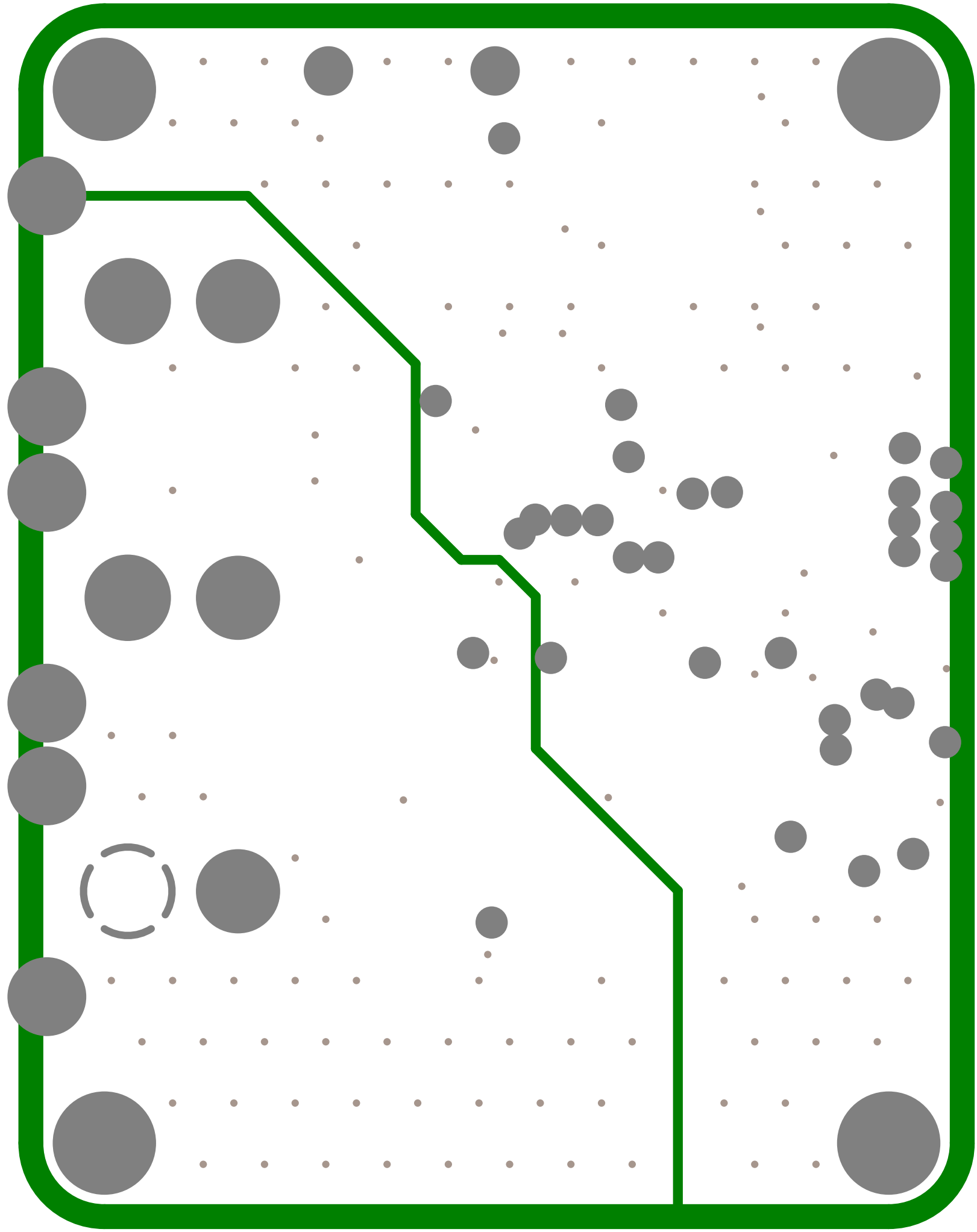

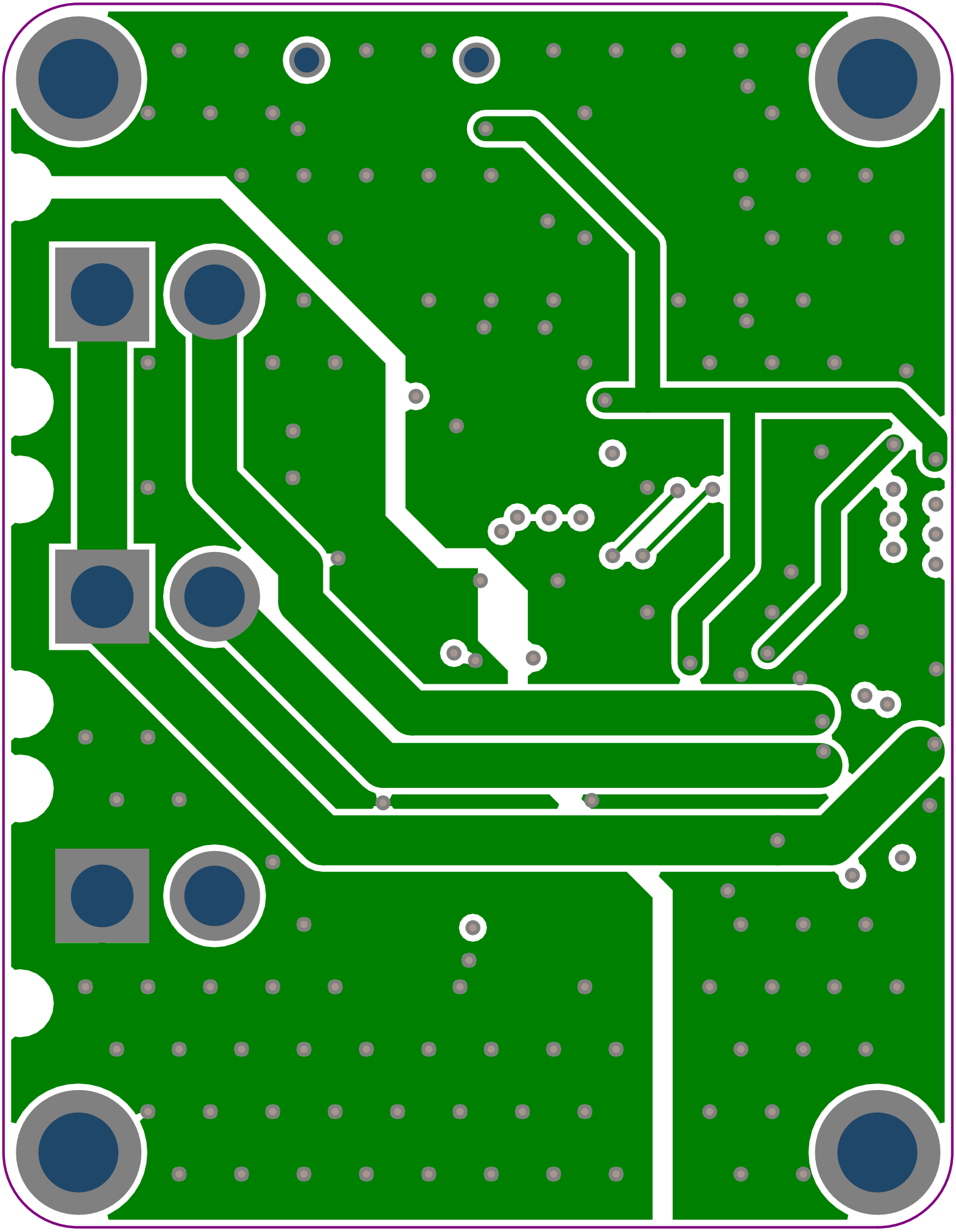

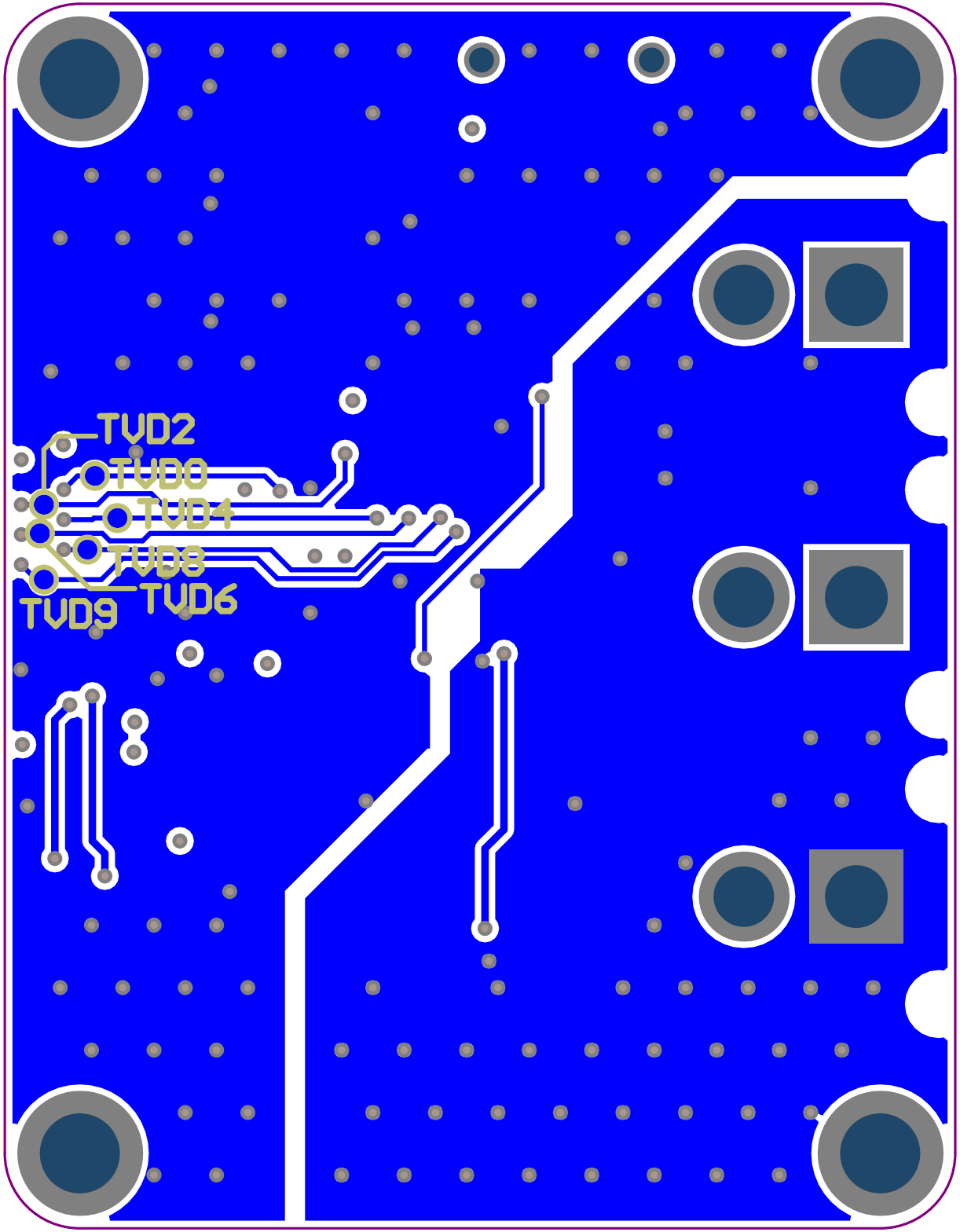
TVD2
TVD0
TVD4
TVD8
TVD6
TVD9

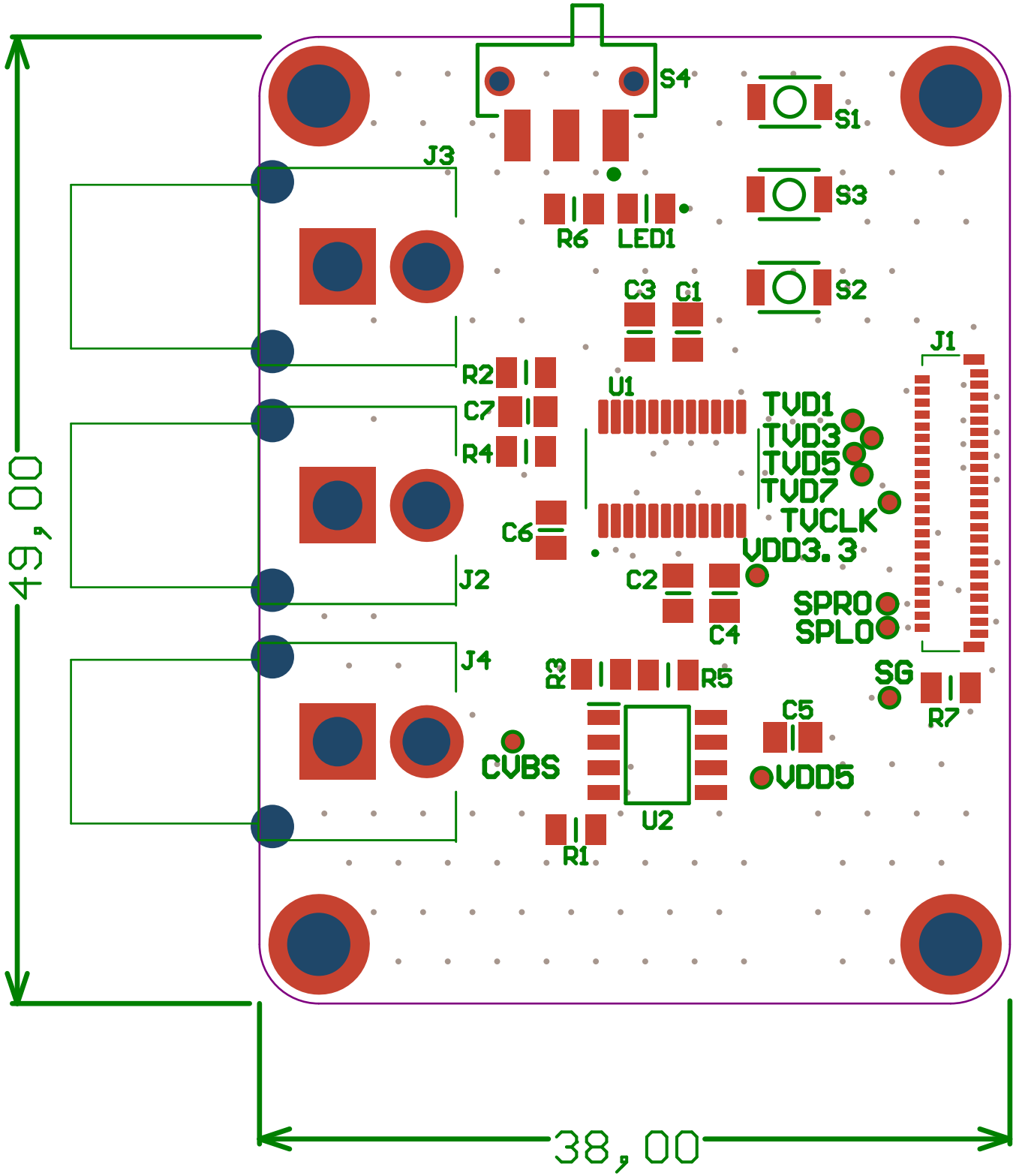
S4
S1
S3
S2
J3
R6
LED1
C3
C1
J1
R2
U1
C7
R4
TVD1
TVD3
TVD5
TVD7
TVCLK
C6
VDD3.3
J2
C2
C4
SPRO
SPLO
J4
R3
R5
SG
R7
C5
CVBS
VDD5
U2
R1
49,00
38,00