NORTH SOUTH UNIVERSITY
Department of Electrical & Computer Engineering(ECE)

CSE332L- Computer Organization & Architecture Lab
Section: 07
Faculty: Tanjila Farah (TnF)

Lab Report: 02
Name of the Experiment : Design of a 2-bit Arithmetic unit.

Submitted By: Rafiqul Islam

Name	ID
Rafiqul Islam	2413893642
Namira Nawar	2411514042
Seaam Ahmed	2411432642
Rowful Ahasan	2411269042

Group Number: 1

Date of Experiment: 05-02-2026

Date of Submission:19-02-2026

For Instructor's use only

SCORE:	REMARKS:
PENALTY:	

CamScanner

Experiment Name : Design of a 2-bit Arithmetic unit

Objectives

(i) Performing arithmetic operation like addition and substracting on 2-bit Binary numbers

(ii) Implementing operations like Add with carry and substract with borrow.

(iii) Performing operations of Increment, Decrement and Transfer of input A.

(iv) Finally designing and implement of a 2-bit arithmetic unit using basic digital ICs.

Equipment :

a) Trainer board

b) i) IC 7404
   ii) IC 7483
   iii) 74F153

c) Wires for connection

CamScanner

Theory

This design shows us a 2-bit arithmetic unit demonstrates how basic arithmetic operations such as addition, substration, increment, decrement and transfer can be performed using digital logic circuit. Here, two 2-bit inputs A and B are processed using integrated circuit like the 7483, 74F153, 7404. Here, full adder performs addition, while the substration done by 2's compliment. Finally the selection lines determine which arithmetic operation is executed and output is observed through the sum and carry signal.

CamScanner

Circuit Diagram

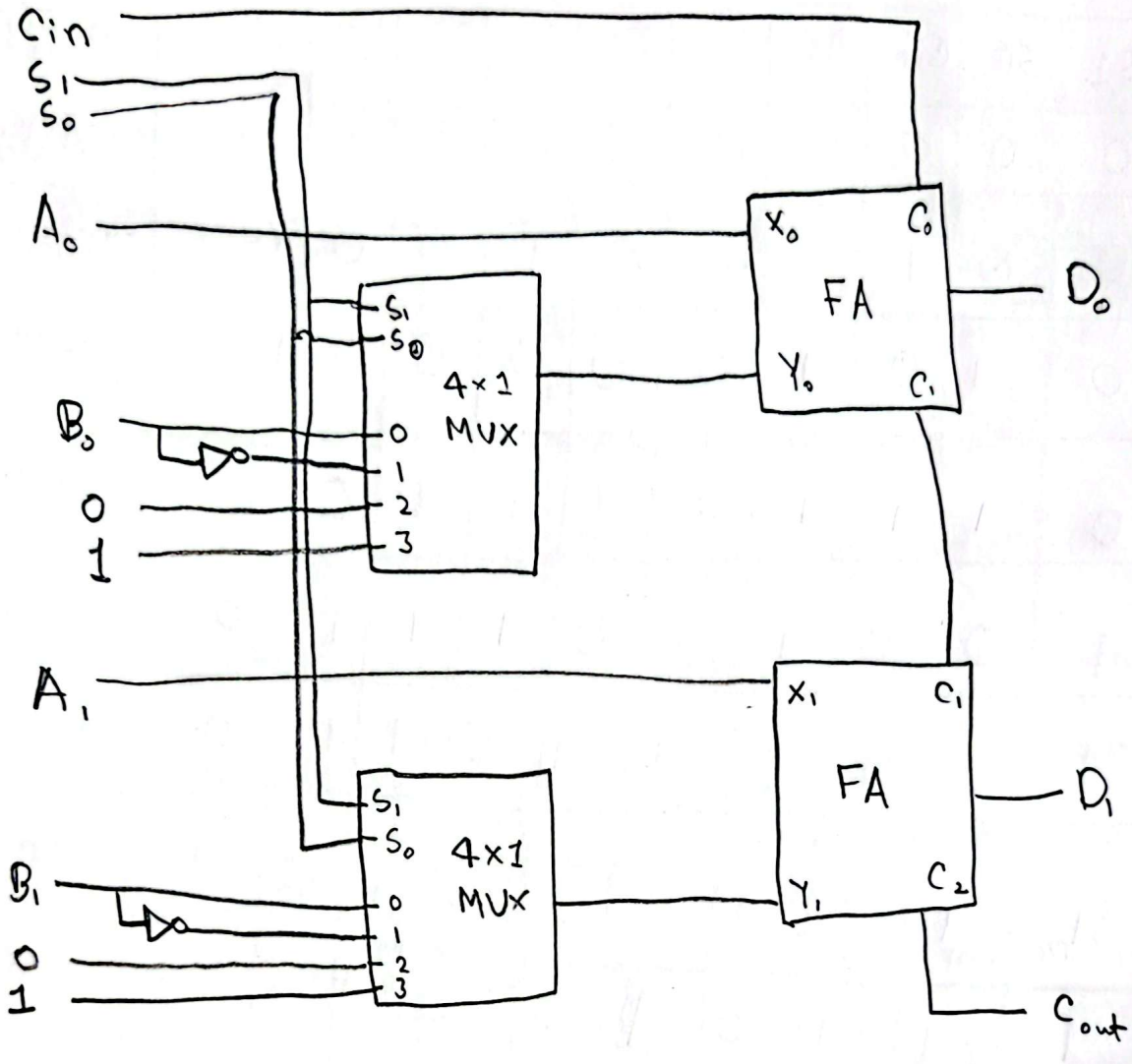

Truth Table

S1	S0	Cin	A0	A1	B1	B0	D1	D0	Cout	Microoperation
0	0	0	0	0	0	0	0	1	0	Add
0	0	1	0	1	0	1	0	0	1	Add with carry
0	1	0	1	0	0	0	0	0	1	Substract with Bonnow
0	1	1	1	0	1	1	1	0	0	substract
1	0	0	1	1	0	1	1	1	0	Transfer A
1	0	1	0	1	1	0	1	1	0	Increment A
1	1	0	1	1	0	0	1	0	1	Decrement A
1	1	1	0	Φ	0	0	1	0	1	Transfer A

CamScanner

Discussion

During this experiment of designing a 2-bit arithmetic unit, we faced several practical difficulties while constructing and testing the circuit on the trainer board. Initially, after completing the connection the output didn't work properly. Later, we discovered that ICs aren't working properly inserted into the socket, which caused incorrect or no output. After, carefully repositioning the ICs and reconnecting the power supply and ground pins, the circuit started functioning more raliably. Another major challenge was confusing between the control and input lines especially S0, S1, A1, A0, B1 and B0. Because this signals looks similian and are closely connected in the circuit, It was easy to misplace wires, leading to wrong output. By rechecking the pin configuring of the ICs and comparing the connections with the function table.

CamScanner

and circuit diagram, we were able to correct the mistakes. Through this experiment, we learned the importance of careful wiring, proper IC placement and systemetic troubleshooting in digital circuit implementation.

CamScanner

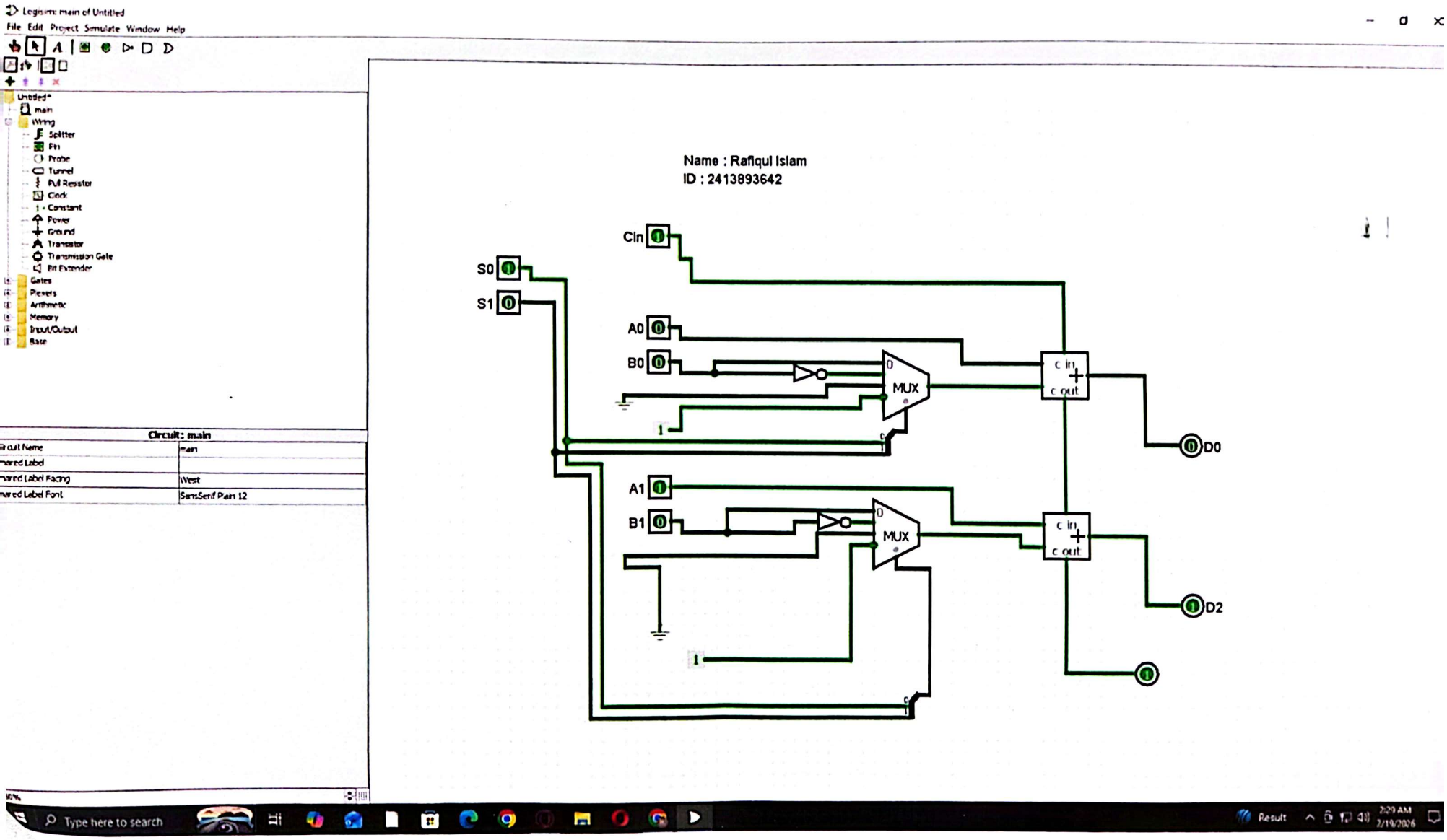
Logisim: main of Untitled
File Edit Project Simulate Window Help
Untitled*
main
Wiring
Splitter
Pin
Probe
Tunnel
Pull Resistor
Clock
Constant
Power
Ground
Transistor
Transmission Gate
Bit Extender
Gates
Plexers
Arithmetic
Memory
Input/Output
Base
Circuit : main
Circuit Name
main
Shared Label
Shared Label Facing
West
Shared Label Font
SansSerif Plain 12
Name : Rafiqul Islam
ID : 2413893642
Cin
S0
S1
A0
B0
A1
B1
MUX
MUX
c in
c out
c in
c out
D0
D2
Type here to search
Result
2:29 AM
2/19/2026

Lab Manual
Department of Electrical and Computer Engineering
School of Engineering and Physical Sciences
North South University, Bashundhara, Dhaka-1229, Bangladesh

Experiment No: 2
Experiment Name: Design of a 2-bit Arithmetic unit.

Introduction:
In this experiment you will construct a 2-bit arithmetic unit which is a part of an ALU. The arithmetic unit will be used to add and subtract two 2 bit inputs, A and B, as well as increment, decrement or transfer any of the inputs.

Arithmetic Operations:

Add- Each bit of input A is added with the corresponding bit of input B and the sum appears at the output of each full adder along with any carry out.
Add with carry- Each bit of input A and B are added with the input carry and the sum appears at the output of each full adder along with any carry out.
Subtract- Each bit of input B is subtracted from the corresponding bit of input A and the difference appears at the output of each full adder along with any borrow out.
Subtract with borrow- Each bit of input B is subtracted from A with borrow. The difference and the borrow out appear at the output.
Increment A- Each bit of A is increased by 1 and the result appears at the output of each full adder.
Decrement A- Each bit of A is decreased by 1 and the result appears at the output of each full adder.
Transfer A- Each bit of A appears at the output of each full adder, unmodified.

Equipments:
- Trainer board
- IC 7404,7483, 74F153
- Wires for connection.

Function Table:

Complete the function table according to your theoretical knowledge.

S1	S0	Cin	A0	A1	B1	B0	D1	D0	Cout	Microoperation
0	0	0	0	0	0	1	0	1	0	Add
0	0	1	0	1	0	1	0	0	1	Add with Carry
0	1	0	1	0	0	0	0	0	1	Subtract with Borrow

CamScanner

S_1	S_0	C_{in}	A_0	A_1	B_1	B_0	D_1	D_0	C_{out}	
0	1	1	1	0	1	1	0	0	0	Subtract
1	0	0	1	1	0	1	1	1	0	Transfer A
1	0	1	0	1	1	0	1	1	0	Increment A
1	1	0	1	1	0	0	1	0	1	Decrement A
1	1	1	0	1	0	0	1	0	1	Transfer A

Logic Diagram:

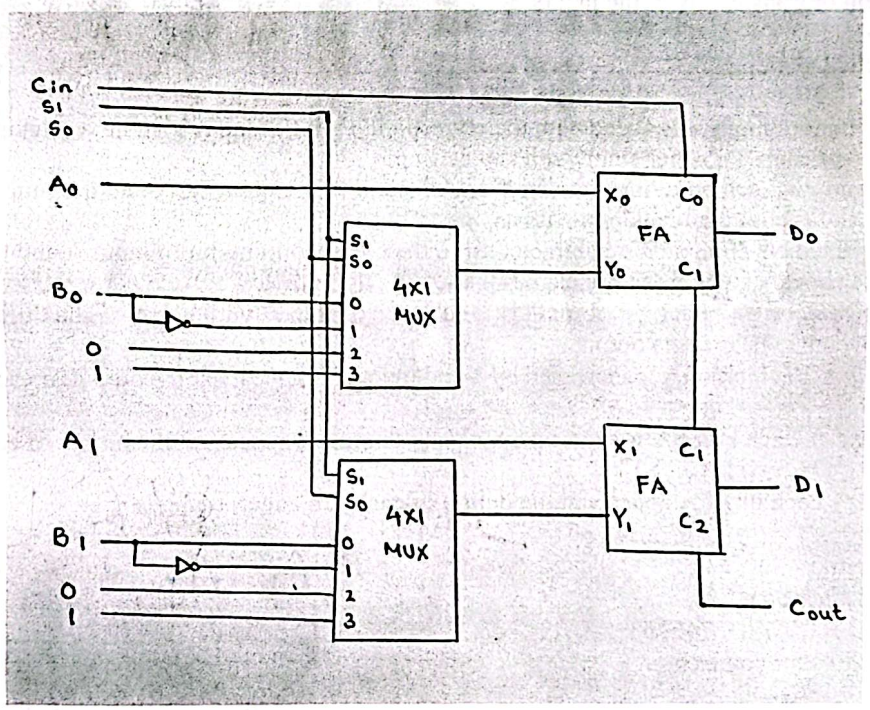

Procedure:

1) Place the ICs on the trainer board.
2) Connect V_{cc} and ground to the respective pins of IC.
3) Connect the inputs with the switches and the outputs with LEDs.
4) Apply various combinations of inputs and observe the outputs.
5) Verify the experimental outputs with the Function Table.

A_1 A_0
B_1 B_0
1 10
0 1 01
1 011
00
+1
01

0 1
0 1
011