NORTH SOUTH UNIVERSITY

Department of Electrical & Computer Engineering (ECE)

CSE332L- Computer Organization & Architecture Lab
Section: 07
Faculty: Tanjila Farah (TnF)

Lab Report: 03
Name of the Experiment:Design of a 4 bit Universal Shift Register

---

Submitted By:

Group Number:01

Name		ID	
1. Namira Nawar	2. Seaam Ahmed	2411514042	2411432642
3. Rowful Ahasan		2411269042	

Date of Experiment: 19/02/2026
Date of Submission:26/02/2026

For Instructor's use only

SCORE:	REMARKS:
PENALTY:	

CamScanner

Objective:

The objective of this experiment is to design and implement a 4-bit universal shift register using D flip-flops and 4x1 multiplexers. The register should be able to perform shift right, shift left, parallel load, and no change operations.

List of Equipment:

- Four D Flipflops (7474 ICs)
- Four 4x1 Multiplexers (74153 ICs)
- Trainer Board
- Connecting Wires
- Power Supply (5V)

Theory:

A shift register is a sequential circuit used to store & transfer binary data. It

consists of flip-flops connected in such a way that data can be shifted either left or right.

A universal shift register can perform four operations:

1. No change
2. Shift Right
3. Shift Left
4. Parallel Load

In this experiment, four D flip-flops are used to store 4-bit data (A4, A3, A2, A1). Each flip-flop receives input from 4x1 multiplexer.

The select lines S1 and S0 control the mode of operation.

Mode Control Table

S1	S0	Operation
0	0	No change
0	1	Shift Right
1	0	Shift left
1	1	Parallel Load

CS CamScanner

Operation Explanation:

- No change (00): The previous data remains unchanged.

- Shift Right (01): A4 → A3 → A2 → A1
  Serial input enters at A4

- Shift left (10): A1 → A2 → A3 → A4
  Serial input enters at A1.

- Parallel Load (11): Inputs I4, I3, I2, I1 are loaded directly into A4, A3, A2, A1.

Clear input resets all outputs to 0.

CamScanner

Circuit Diagram :

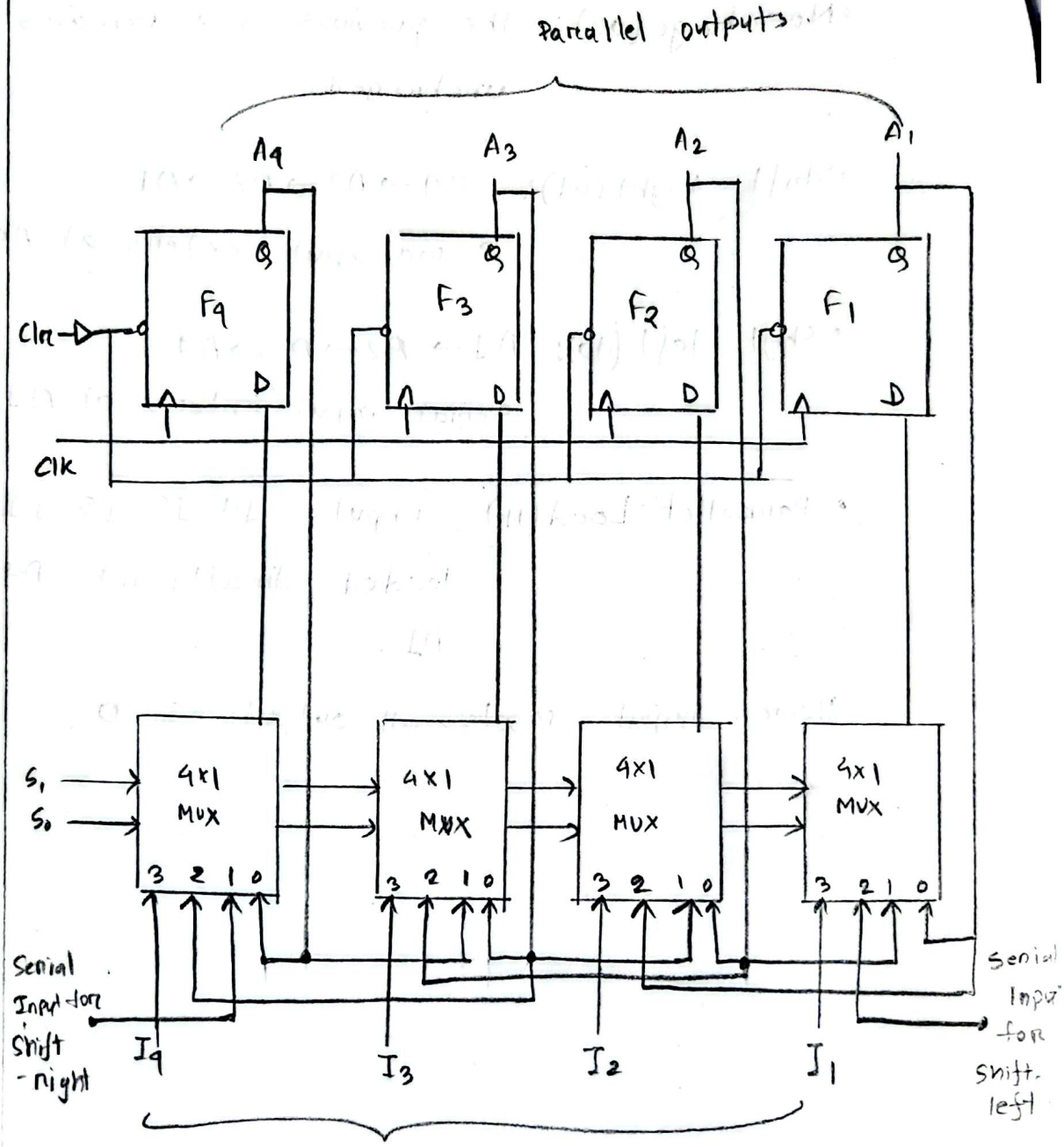

4 bit universal shift Register

Data / Truth Table :

clr	Preset	S1	S0	Serial Input for shift Right	Serial Input for left shift	I_4 I_3 I_2 I_1	A_4 A_3 A_2 A_1
0	0	X	X	X	X	X X X X	X X X X
0	1	X	X	X	X	X X X X	X X X X
1	0	X	X	X	X	X X X X	X X X X
1	1	1	1	X	X	1 0 1 1	1 0 1 1
1	1	0	0	X	X	X X X X	X X X X
1	1	0	1	1	X	X X X X	1 X X X
1	1	1	0	X	0	X X X X	X X X 0
1	1	1	1	X	X	0 1 0 1	0 1 0 1

Discussion :

In this experiment, we constructed a 4-bit Universal shift Register using D flip-flops and multiplexers. At first, we connected the power supply & verified that all ICs were functioning properly. After wiring the select lines and serial inputs, we tested each operation.

CamScanner

When S1S0 = 00, the register held its previous value, confirming the no-change operation. When S1S0 = 01, the data shifted right correctly with serial input entering at A4. When S1S0 = 10, the data shifted left correctly with serial input entering at A1. For S1S0 = 11, the parallel inputs were loaded ~~suf~~ successfully.

For shift right we connected the wrong wires, so at first the output was not showing. Besides, some minor fluctuations were observed due to loose wiring & improper grounding, but after correcting connections, the outputs matched the theoretical results.

This experiment helped us understand how multiplexers control data selection & how shift registers operate in digital systems.

CamScanner

Conclusion :

The 4-bit universal shift register was successfully designed and implemented. All four operations (no change, shift right, shift left and parallel load) were verified both practically and in simulation. The experimental results matched the theoretical expectations.

CamScanner

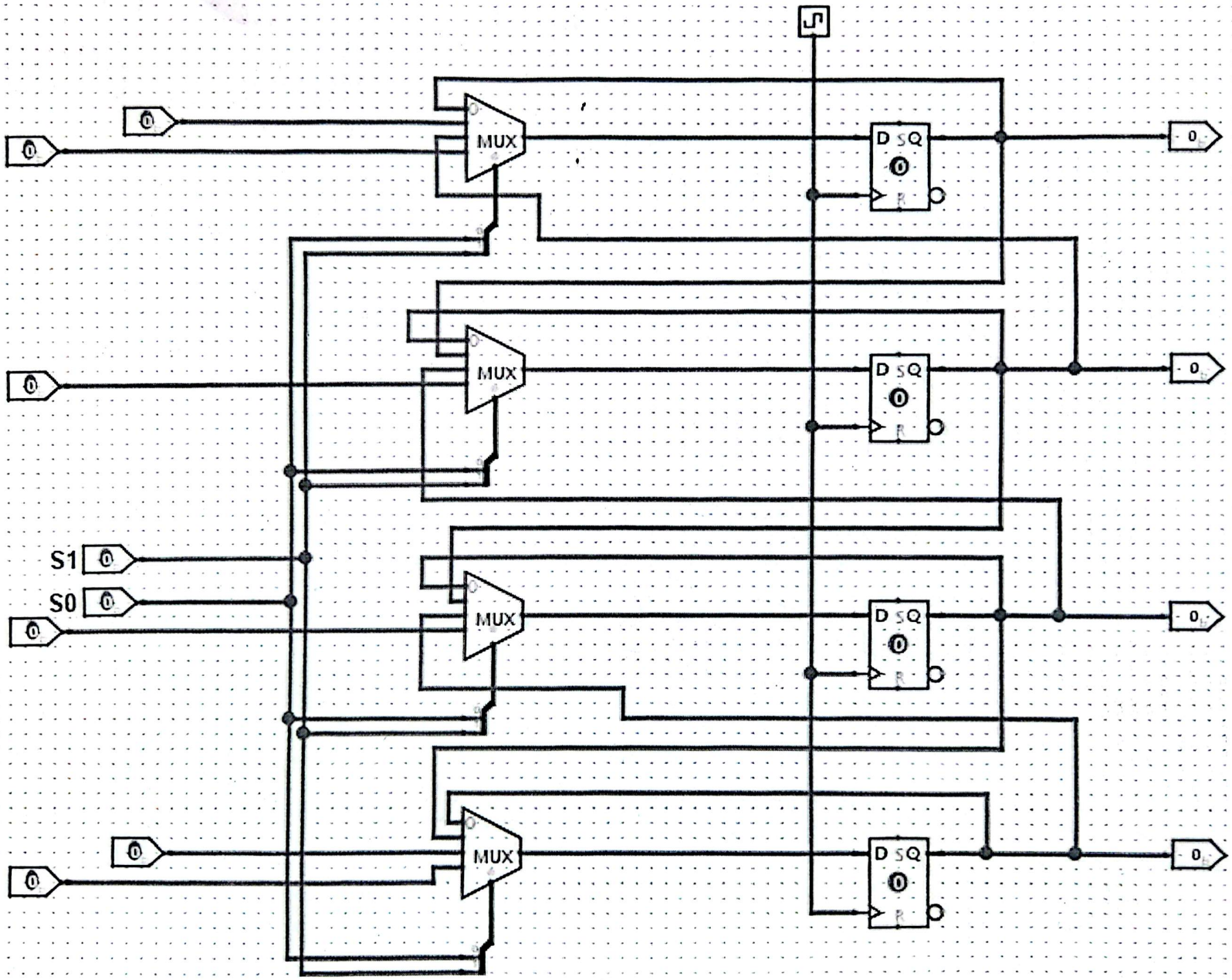

4-bit universal shift register

CamScanner

Function Table:

Complete the function table according to your theoretical knowledge.

Clear	Preset	S1	S0	Serial Inpur for right shift	Serial Inpur for left shift	I4	I3	I2	I1	A4	A3	A2	A1
0	0	X	X	X	X	X	X	X	X	X	X	X	X
0	1	X	X	X	X	X	X	X	X	X	X	X	X
1	0	X	X	X	X	X	X	X	X	X	X	X	X
1	1	1	1	X	X	1	0	1	1	1	0	1	1
1	1	0	0	X	X	X	X	X	X	X	X	X	X
1	1	0	1	1	X	X	X	X	X	1	X	X	X
1	1	1	0	X	0	X	X	X	X	X	X	X	0
1	1	1	1	X	X	0	1	0	1	0	1	0	1

X = Don't Care

The variable that has 'X' as input, does not affect the ouput at that time

Setup complete
works upto 2 bit
Problem in next 2 bit

Procedure:

1) Place the ICs on the trainer board.
2) Connect V_{cc} and ground to the respective pins of IC.
3) Connect the inputs with the switches and the outputs (A1-A4) with LEDs.
4) Apply various combinations of inputs and observe the outputs.
5) Verify the experimental outputs with the Function Table.

Assignment:

1) Prepare the lab report.
2) Implement the circuit in Logisim. Take a screenshot and include it in your lab report.

CamScanner