NORTH SOUTH UNIVERSITY

Department of Electrical & Computer Engineering (ECE)

CSE332L- Computer Organization & Architecture Lab
Section: 07
Faculty: Tanjila Farah (TnF)

Lab Report: 4
Design of a 4-bit Binary Up-Down Synchronous Counter

Submitted By: Seaam Ahmed

Group Number: 01

Name	ID
1. Seaam Ahmed	1. 2411432642
2. Rowful Ahasan	2. 2411269042
3. Namira Nawar	3. 2411514042
4. Rafiqul Islam	4. 2413893642

Date of Experiment: 26-02-2026
Date of Submission: 05-03-2026

For Instructor's use only

SCORE:	REMARKS:
PENALTY:	

CamScanner

Design of a 4-bit Binary Up-Down Synchronous Counter.

Objective:

① Using flipflops to construct a 4-bit Binary Up-Down Synchronous Counter.

② Using a control unit to switch between Up and Down functions.

③ Analyzing the increment/decrement of values with each clock pulse for up/down counters respectively

④ Verifying the accuracy of the counter gained from the experiment comparing with ~~their~~ theoritical knowledge.

List of Equipment:

* Trainer board
* Wires for connections
* 1x IC 7404, 2x IC 7408, ~~7432~~ 1x IC 7432, 2x IC 7476
* Power supply

CamScanner

Theory: ~~A~~

A counter is a kind of register that generates values sequentially by the help of some signals, i.e. clock pulse. Counters are generally built with flip-flops that has toggle features i.e. JK, T. In a binary counter, the values are always increased or decreased by 1 for up and down counters respectively. We can ~~deri~~ draw state diagram for these counters and derive their state tables using the values we get. Again, by using the results from the table, we can build K-maps and construct a fully functional circuit for the synchronous counter.

CamScanner

Circuit Diagram:

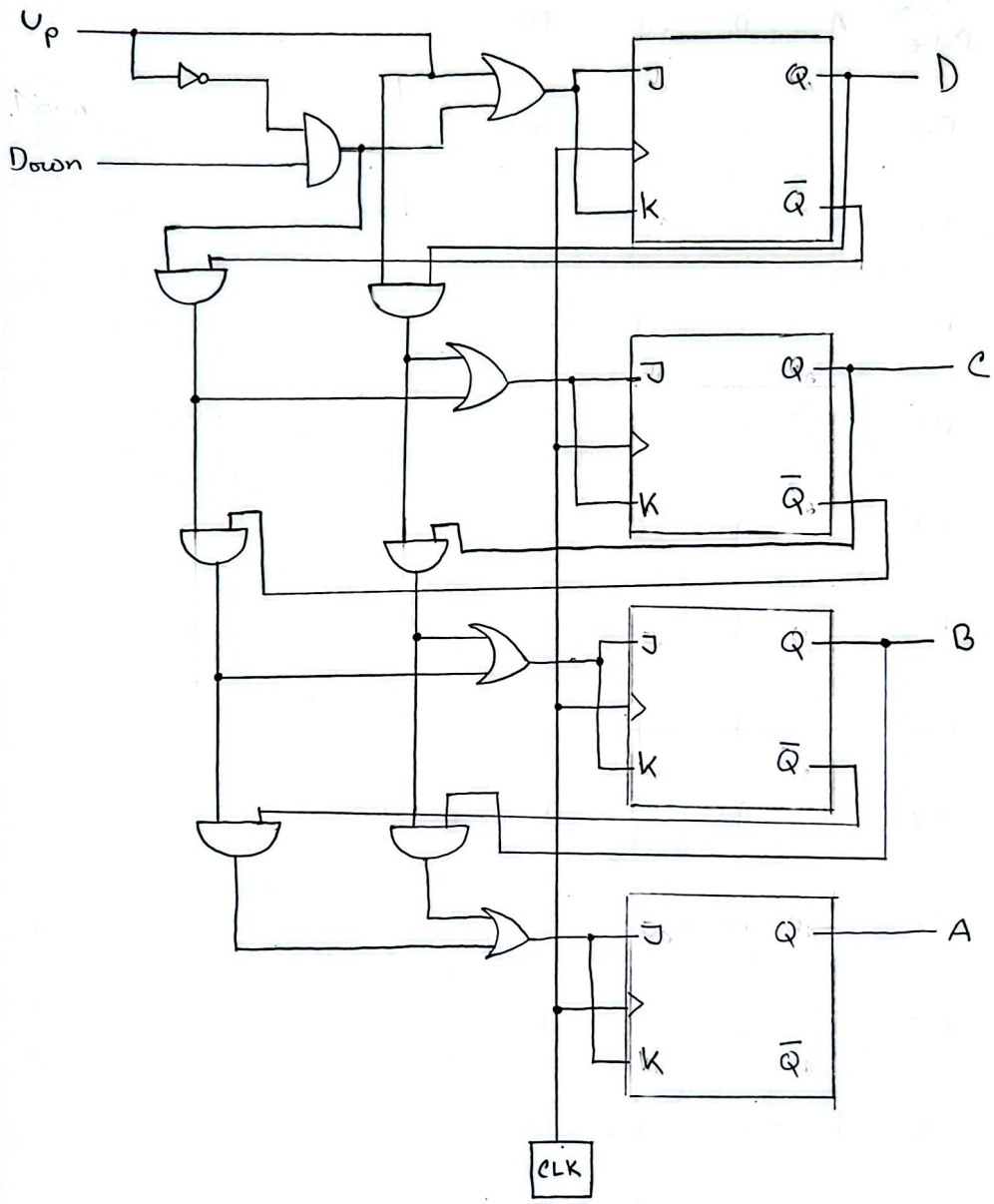

Fig: Logic circuit diagram of a 4-bit binary up-down counter

CamScanner

Truth Table:

Clock Pulse	A	B	C	D
P0	0	0	0	0
P1	0	0	0	1
P2	0	0	1	0
P3	0	0	1	1
P4	0	1	0	0
P5	0	1	0	1
P6	0	1	1	0
P7	0	1	1	1
P8	1	0	0	0
P9	1	0	0	1
P10	1	0	1	0
P11	1	0	1	1
P12	1	1	0	0
P13	1	1	0	1
P14	1	1	1	0
P15	1	1	1	1

CamScanner

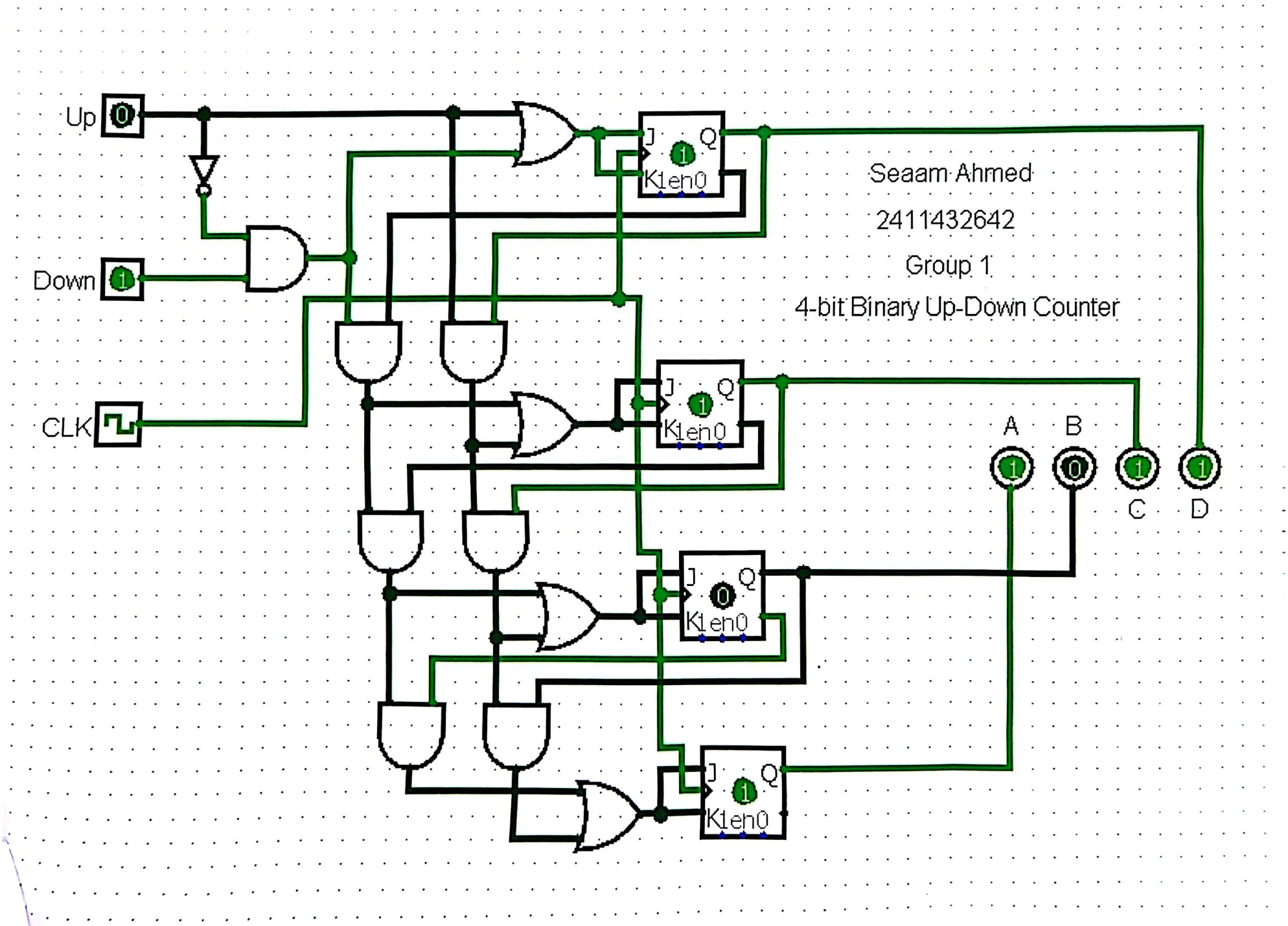
Up
Down
CLK
J
Q
K1en0
Seaam Ahmed
2411432642
Group 1
4-bit Binary Up-Down Counter
A
B
C
D

CamScanner

Discussion:

In this experiment, we constructed a 3-bit Up-down synchronic counter. We used two control switch for switching between up and down functions. The synchronization was done with the help of clock pulse. We did it it two steps, first, only 2-bit and later the 3rd bit. As there were not 3e for T-flipflops in our lab, we used JK flipflops instead and converted them into T-flipflops by short circuiting K. During the experiment, we had some issues with the power supply, but later, we were able to fix it. Again, from the state diagram, we got the equations for each output and saw that they follow a pattern. Sequentially, each output is a multiple of the previous outputs for the

P.T.O.

CamScanner

Up counter whereas, the down counter shows multiple of their complements. After completion, we verified our data's accuracy with the help of our theoritical knowledge and found the results to be correct. Due to the sheer amount of wiring, it took a while to complete, but with enough practice and by using variety of wires (sizes) it could be done a bit more faster.

CamScanner

CSE 332/ EEE 336/ ETE 336 Computer Organization and Architecture

Truth Table:

Clock pulse	A	B	C	D
P0	0	0	0	0
P1	0	0	0	1
P2	0	0	1	0
P3	0	0	1	1
P4	0	1	0	0
P5	0	1	0	1
P6	0	1	1	0
P7	0	1	1	1
P8	1	0	0	0
P9	1	0	0	1
P10	1	0	1	0
P11	1	0	1	1
P12	1	1	0	0
P13	1	1	0	1
P14	1	1	1	0
P15	1	1	1	1

3bit up: ok
3bit down: ok

Bonus-02

(1) Beeram
(2) Roufil
(3) Rafik
(4) Namera

G-01

CamScanner

Logic Circuit Diagram:

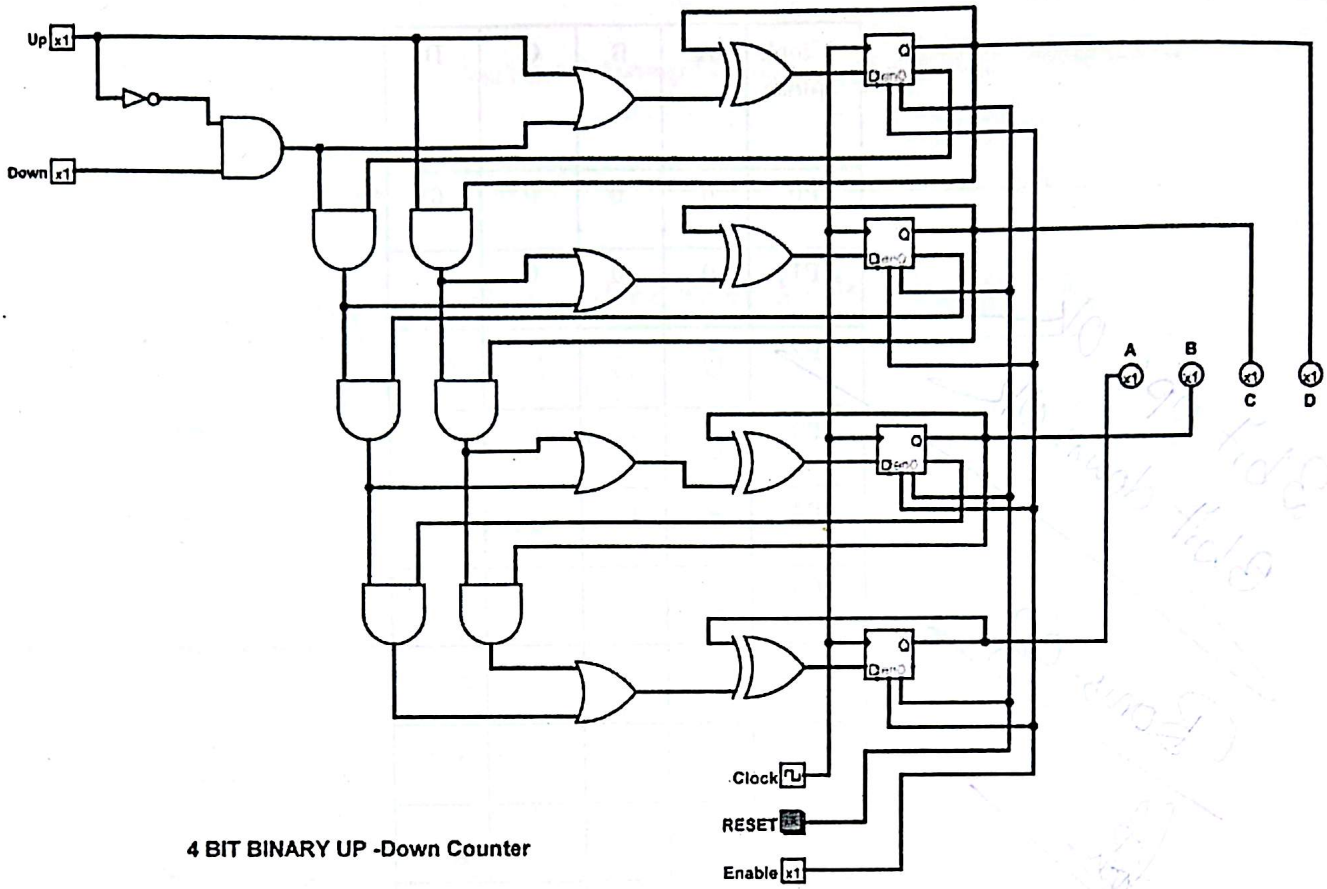

Logic Diagram of 4 – Bit Binary up Down Counter

Procedure:

1) Place the ICs on the trainer board.
2) Connect V_{cc} and ground to the respective pins of IC.
3) Connect the inputs with the switches (UP, DOWN, CLOCK, RESET) and the 4) Outputs (A, B, C, D) with LEDs.
5) Apply various combinations of inputs and observe the outputs.
6) Verify the experimental outputs with the Truth Table.

CamScanner