Underwater Wireless Optical Communication

Presented By:
Riant Dadra (2025PSP0009)
Shivangi Shukla (2025PSP0010)
Sunil Kumar (2025PSP0011)

Indian Institute of Technology Jammu

3rd February 2026

Introduction and Motivation

Overview: Modern ocean exploration requires reliable links for AUVs, ROVs, and sensor networks to support naval surveillance and disaster prevention.

- **Naval Security:** Essential for underwater intrusion detection and national security monitoring .
- **Exploration:** Enables deep-sea data collection and environmental monitoring of oil/gas resources.
- **Methods:** Communication is typically achieved via Acoustic, Radio Frequency (RF), or Optical signals .

Why Optical Communication?

Comparison: Traditional underwater communication methods have significant physical limitations that prevent high-rate, real-time data transmission.

Method	**Data Rate**	**Range**	**Latency**
Acoustic	Low	Long	High
RF	Very Low	Very Short	Low
Optical (UWOC)	**High**	Medium	**Very Low**

Table 1: Performance Comparison of Underwater Communication Technologies

- **Acoustic:** Relies on sound pressure waves; effective for long-range links but restricted by low bandwidth and high time latency.
- **Radio Frequency (RF):** Uses electromagnetic waves; faces extreme signal attenuation in conductive seawater due to the skin effect.
- **Optical (UWOC):** Employs modulated light beams, specifically in the blue-green spectrum, to achieve high-speed and low-latency data transfer.

Underwater Wireless Optical Communication

Wavelength Selection: UWOC exploits the "blue-green window" (400–500nm) where seawater exhibits minimum absorption of light .

- **Transmission:** Uses modulated optical beams to establish high-speed connections through the water medium .
- **Optimization:** Wavelengths are adjusted based on water clarity (blue for clear, green for turbid) .

Channel Characteristics

Signal Degradation: Attenuation is the sum of absorption (energy loss to heat) and scattering (redirection of light).

- **Water Types:** Jerlov classified water from Pure Ocean to Turbid Harbor based on specific optical properties.
- **Particles:** Plankton and mineral components significantly increase signal scattering.

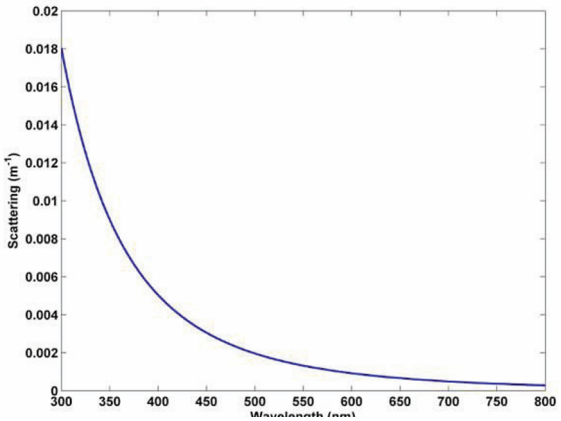

Figure 1: Scattering coefficient of pure water

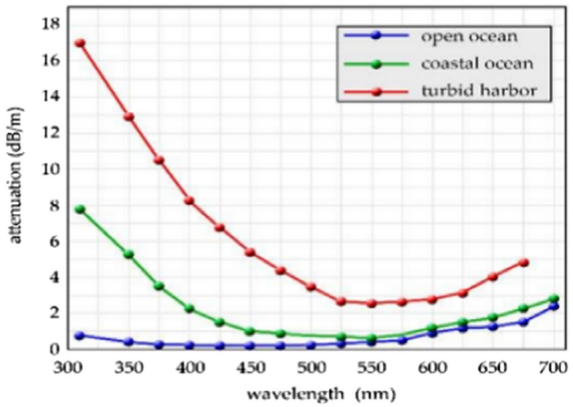

Figure 2: Attenuation in ocean water types

UWOC: Mathematical Channel Modeling Summary

1. Attenuation Dynamics ($c = a + b$)

- **Absorption (a):** Energy loss to water, chlorophyll (C_c), and acids.

$$a(\lambda) = a_w + a_c^0 \left(\frac{C_c}{C_c^0}\right)^{0.602} + a_f^0 e^{-k_f \lambda} + a_h^0 e^{-}$$

- **Scattering (b):** Redirection by water and particles.

$$b(\lambda) = b_w(\lambda) + b_s^0(\lambda) C_s + b_l^0(\lambda) C_l$$

Parameters: C_c: Chlorophyll; λ: Wavelength.

2. Link Performance

- **Power & Stability:** Combined model for LOS power (P_R) and scintillation (σ_I^2).

$$P_R = P_T \eta_T \eta_R \left(\frac{d \cos\theta}{\cos\theta_c}\right) \times \left(\frac{\cos\theta A_{Rec}}{(1-\cos\theta_0) 2\pi d^2}\right)$$

$$\sigma_I^2 = \sigma_{I,l}^2(0, L, \lambda) + \sigma_{I,r}^2(r, L, \lambda)$$

Alignment: θ_c: Divergence; A_{Rec}: Aperture area.

UWOC System Architecture

Core Design: Typical system consists of a transmitter module, the water channel, and a receiver unit.

- **Transmitter:** Includes a modulator, source (LED/Laser), and lens for beam shaping.
- **Receiver:** Uses optical filters and sensitive photodetectors like PIN, APD, or PMT.

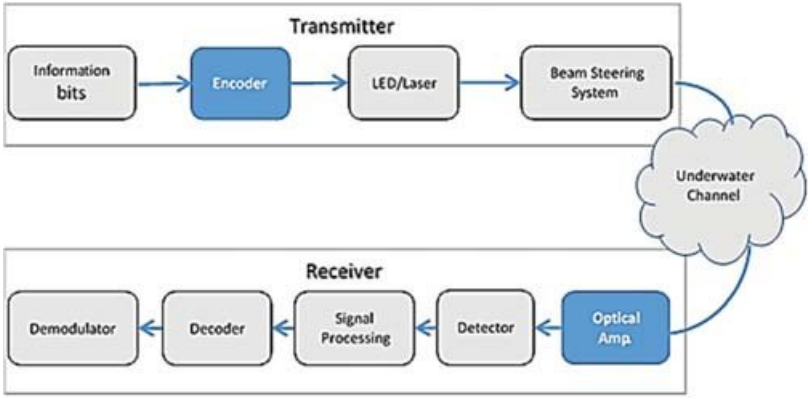

Figure 3: Typical UWOC Architecture

Experimental Setup and Benchmarks

Performance: Advancements in beam combining and ultra-sensitive detectors have significantly extended link distance.

- **LED Milestone:** Omni-directional emitters reached 29.85 Mb/s over 50m distances.
- **Laser Record:** High-performance systems reached 150m at data rates up to 500 Mb/s.

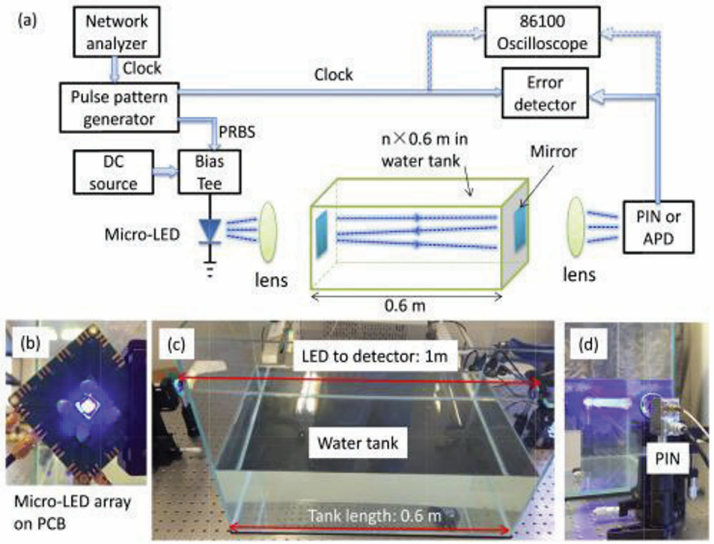

Figure 4: Experimental Setup of typical UOWC system

Conclusion

Summary: UWOC is a transformative technology for subsea data exchange, offering speeds that acoustic methods cannot match.

Final Remarks:

- UWOC is vital for the future "Smart Ocean" and underwater IoT infrastructure.
- Single-photon detection will ensure secure and high-rate communication for national security.

References I

- K. Mamatha et al., "Underwater Wireless Optical Communication- A Review," *Proc. SMART GENCON*, Pune, India, 2023.
- G. Song and J. Xu, "Review on Long-distance Underwater Wireless Optical Communication," *Proc. ICOCN*, 2022
- Z. Tong et al., "Quasi-omnidirectional transmitter for UWOC systems using a prismatic array of LED modules," *Opt. Express*, 2021.