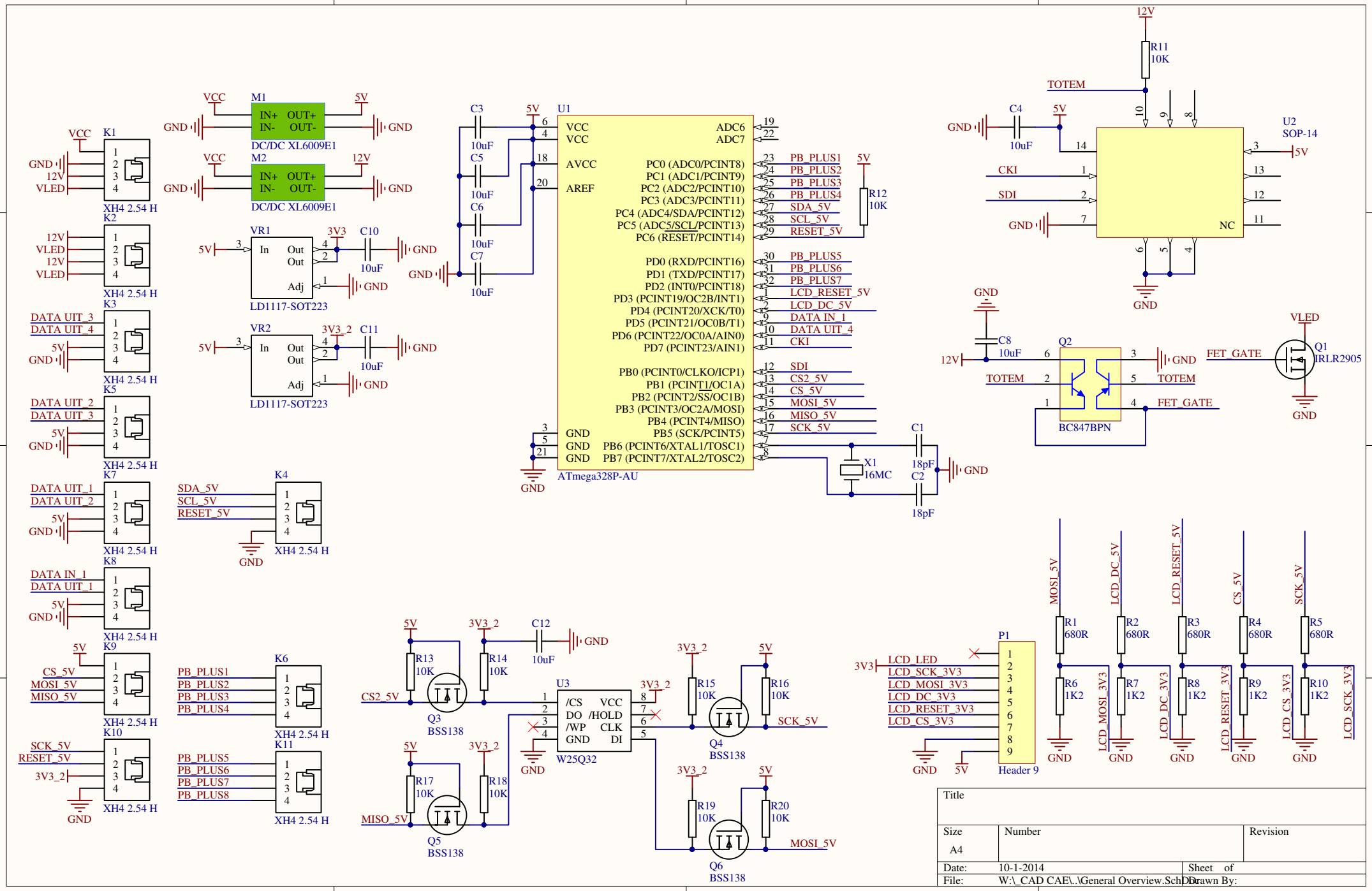
M1
DC/DC XL6009E1
M2
DC/DC XL6009E1
VR1
LD1117-SOT223
VR2
LD1117-SOT223
U1
ATmega328P-AU
U2
SOP-14
Q1
IRLR2905
Q2
BC847BPN
U3
W25Q32
Q3
BSS138
Q4
BSS138
Q5
BSS138
Q6
BSS138
P1
Header 9
K1
K2
K3
K4
K5
K6
K7
K8
K9
K10
K11
XH4 2.54 H
X1
16MC
R11
10K
R12
10K
C1
18pF
C2
18pF
C3
10uF
C4
10uF
C5
10uF
C6
10uF
C7
10uF
C8
10uF
C10
10uF
C11
10uF
C12
10uF
R1
680R
R2
680R
R3
680R
R4
680R
R5
680R
R6
1K2
R7
1K2
R8
1K2
R9
1K2
R10
1K2
R13
10K
R14
10K
R15
10K
R16
10K
R17
10K
R18
10K
R19
10K
R20
10K
FET_GATE
TOTEM
CKI
SDI
NC
LCD_LED
LCD_SCK_3V3
LCD_MOSI_3V3
LCD_DC_3V3
LCD_RESET_3V3
LCD_CS_3V3
MOSI_5V
LCD_DC_5V
LCD_RESET_5V
CS_5V
SCK_5V
Title
Size
A4
Number
Revision
Date:
10-1-2014
Sheet of
File:
W:_CAD CAE\..\General Overview.SchDoc
Drawn By: