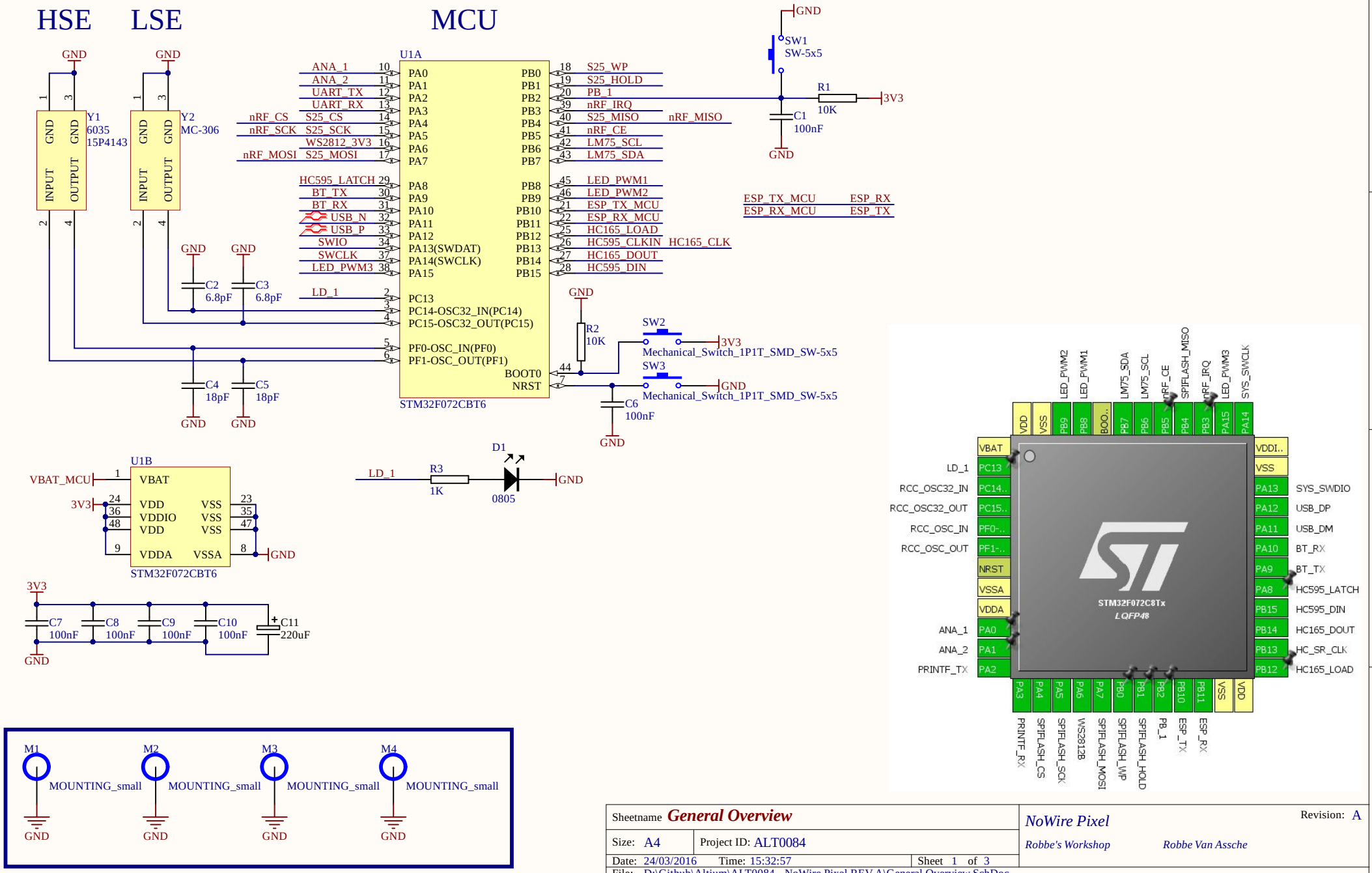
HSE
LSE
MCU
U1A
STM32F072CBT6
Y1
6035
15P4143
Y2
MC-306
SW1
SW-5x5
SW2
SW3
Mechanical_Switch_1P1T_SMD_SW-5x5
R1
10K
R2
10K
R3
1K
C1
100nF
C2
6.8pF
C3
6.8pF
C4
18pF
C5
18pF
C6
100nF
C7
100nF
C8
100nF
C9
100nF
C10
100nF
C11
220uF
D1
0805
U1B
STM32F072CBT6
M1
M2
M3
M4
MOUNTING_small
GND
3V3
ANA_1
ANA_2
UART_TX
UART_RX
nRF_CS
nRF_SCK
WS2812_3V3
nRF_MOSI
HC595_LATCH
BT_TX
BT_RX
USB_N
USB_P
SWIO
SWCLK
LED_PWM3
LD_1
S25_CS
S25_SCK
S25_MOSI
S25_WP
S25_HOLD
PB_1
nRF_IRQ
S25_MISO
nRF_CE
LM75_SCL
LM75_SDA
LED_PWM1
LED_PWM2
ESP_TX_MCU
ESP_RX_MCU
HC165_LOAD
HC595_CLKIN
HC165_DOUT
HC595_DIN
nRF_MISO
HC165_CLK
ESP_RX
ESP_TX
STM32F072C8Tx
LQFP48
RCC_OSC32_IN
RCC_OSC32_OUT
RCC_OSC_IN
RCC_OSC_OUT
ANA_1
ANA_2
PRINTF_TX
SYS_SWDIO
USB_DP
USB_DM
BT_RX
BT_TX
HC595_LATCH
HC595_DIN
HC165_DOUT
HC_SR_CLK
HC165_LOAD
PRINTF_RX
SPIFLASH_CS
SPIFLASH_SCK
SPIFLASH_MOSI
SPIFLASH_WP
SPIFLASH_HOLD
PB_1
ESP_TX
ESP_RX
WS2812B
SPIFLASH_MISO
Sheetname General Overview
Size: A4
Project ID: ALT0084
Date: 24/03/2016
Time: 15:32:57
Sheet 1 of 3
File: D:\Github\Altium\ALT0084 - NoWire Pixel REV A\General Overview.SchDoc
NoWire Pixel
Robbe's Workshop
Robbe Van Assche
Revision: A

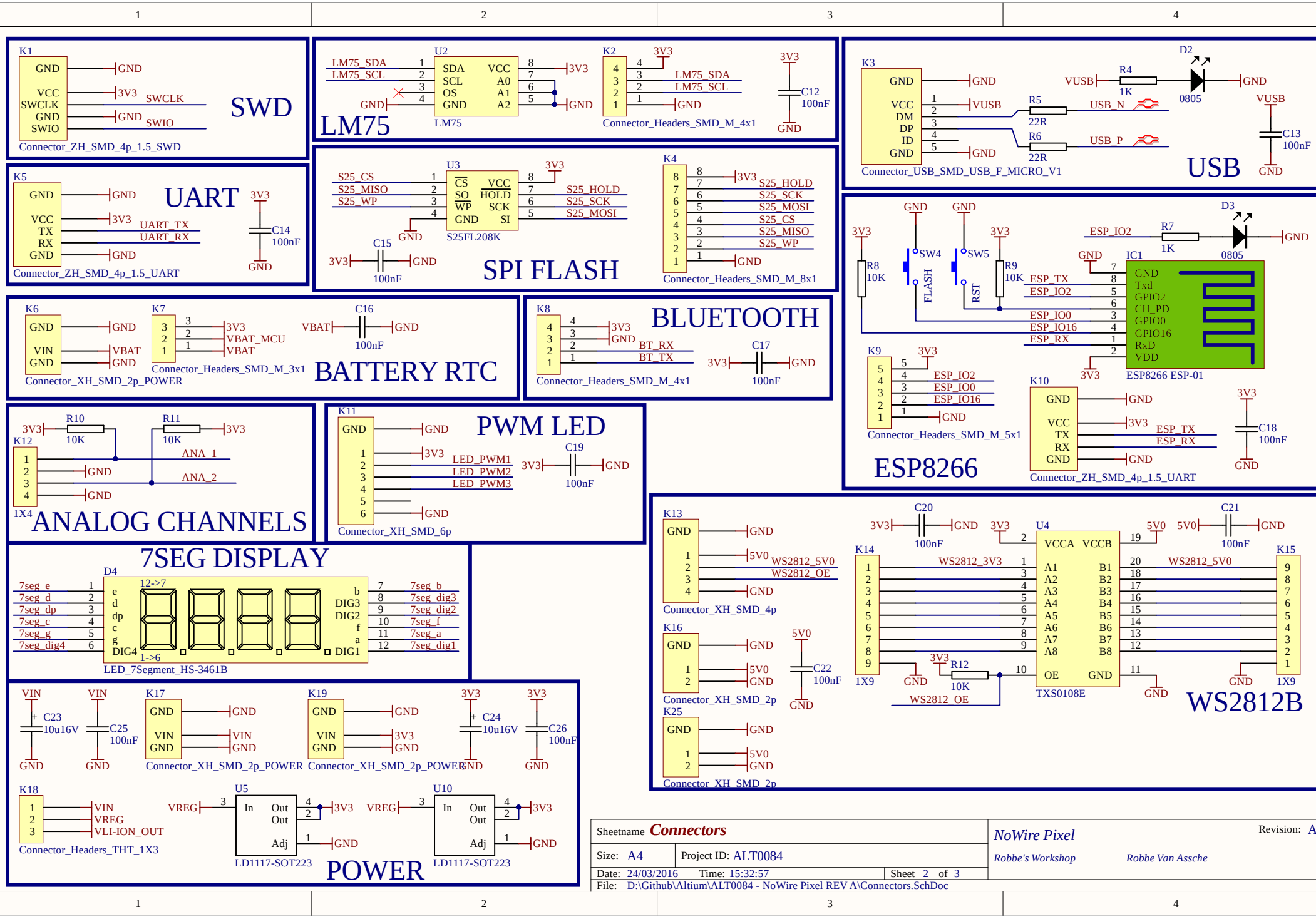
SWD
LM75
UART
SPI FLASH
USB
BLUETOOTH
BATTERY RTC
ESP8266
ANALOG CHANNELS
PWM LED
7SEG DISPLAY
WS2812B
POWER
Connector_ZH_SMD_4p_1.5_SWD
Connector_ZH_SMD_4p_1.5_UART
LM75
Connector_Headers_SMD_M_4x1
S25FL208K
Connector_Headers_SMD_M_8x1
Connector_USB_SMD_USB_F_MICRO_V1
ESP8266 ESP-01
Connector_Headers_SMD_M_5x1
Connector_ZH_SMD_4p_1.5_UART
Connector_XH_SMD_2p_POWER
Connector_Headers_SMD_M_3x1
Connector_Headers_SMD_M_4x1
Connector_XH_SMD_6p
LED_7Segment_HS-3461B
Connector_XH_SMD_4p
Connector_XH_SMD_2p
TXS0108E
Connector_XH_SMD_2p_POWER
Connector_Headers_THT_1X3
LD1117-SOT223
LD1117-SOT223
Sheetname Connectors
Size: A4
Project ID: ALT0084
Date: 24/03/2016
Time: 15:32:57
Sheet 2 of 3
File: D:\Github\Altium\ALT0084 - NoWire Pixel REV A\Connectors.SchDoc
NoWire Pixel
Robbe's Workshop
Robbe Van Assche
Revision: A

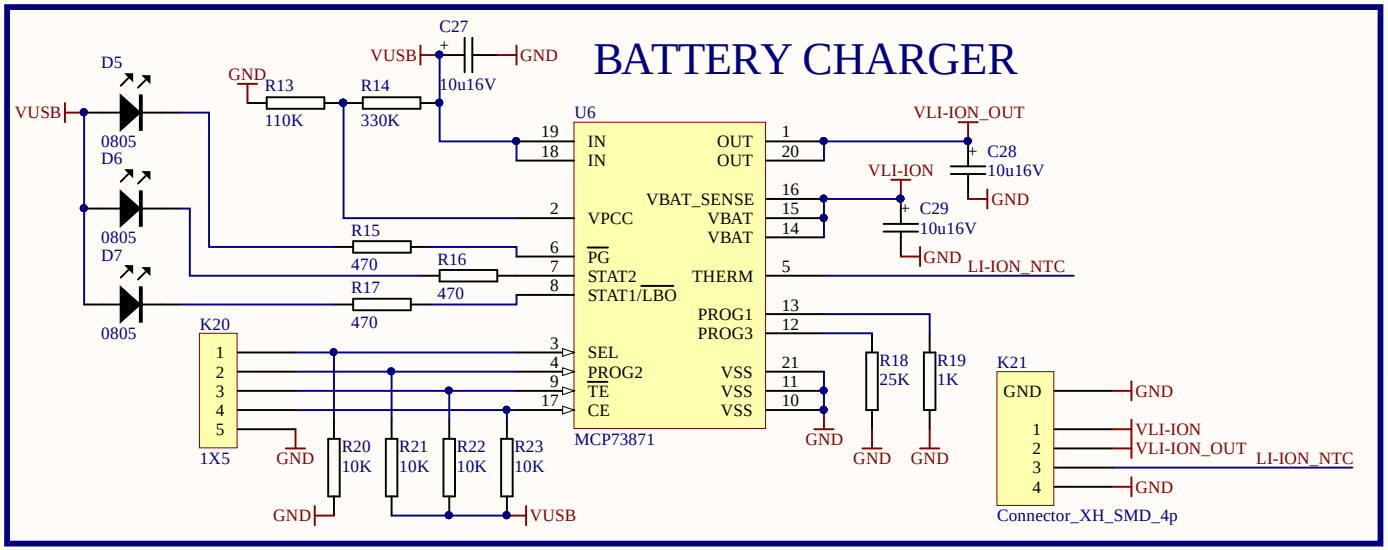

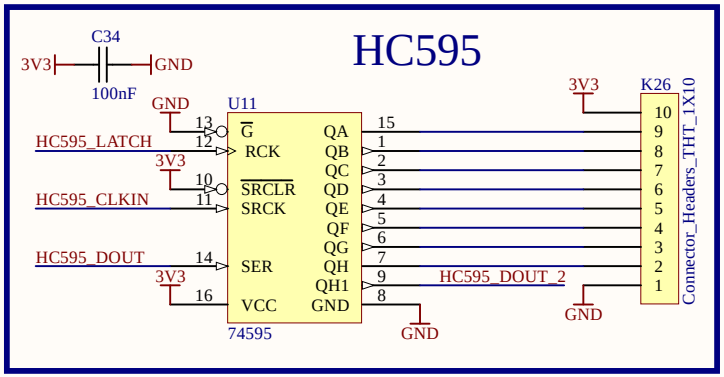

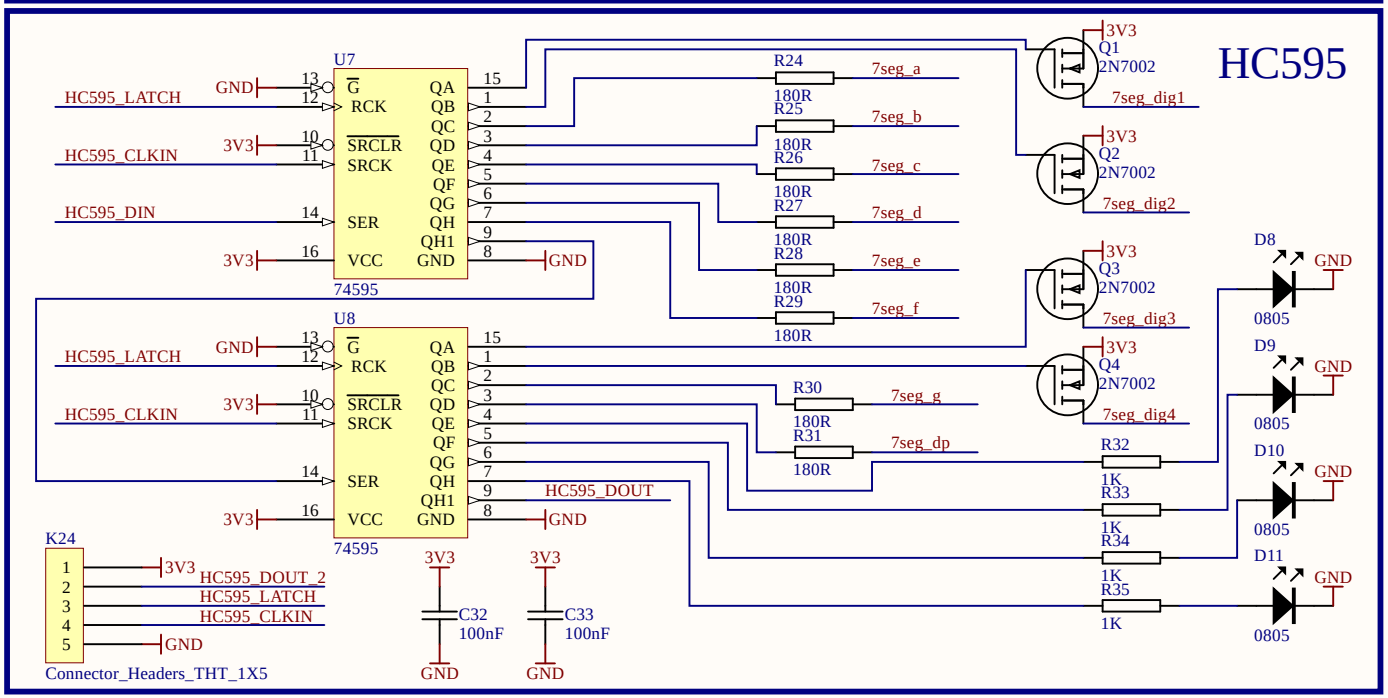

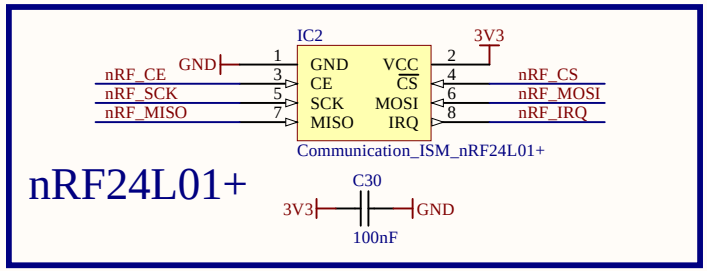

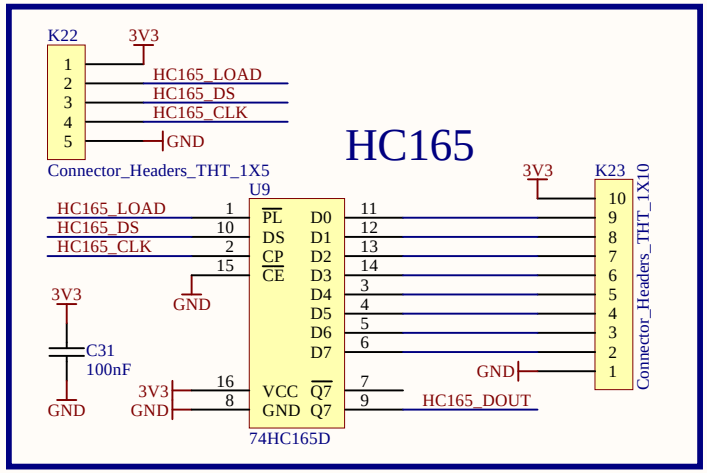

Sheetname	***Connectors 2***		*NoWire Pixel*
Size: A4	Project ID: ALT0084		Revision: A
Date: 24/03/2016	Time: 15:32:57	Sheet 3 of 3	*Robbe's Workshop* — *Robbe Van Assche*
File: D:\Github\Altium\ALT0084 - NoWire Pixel REV A\Connectors 2.SchDoc			

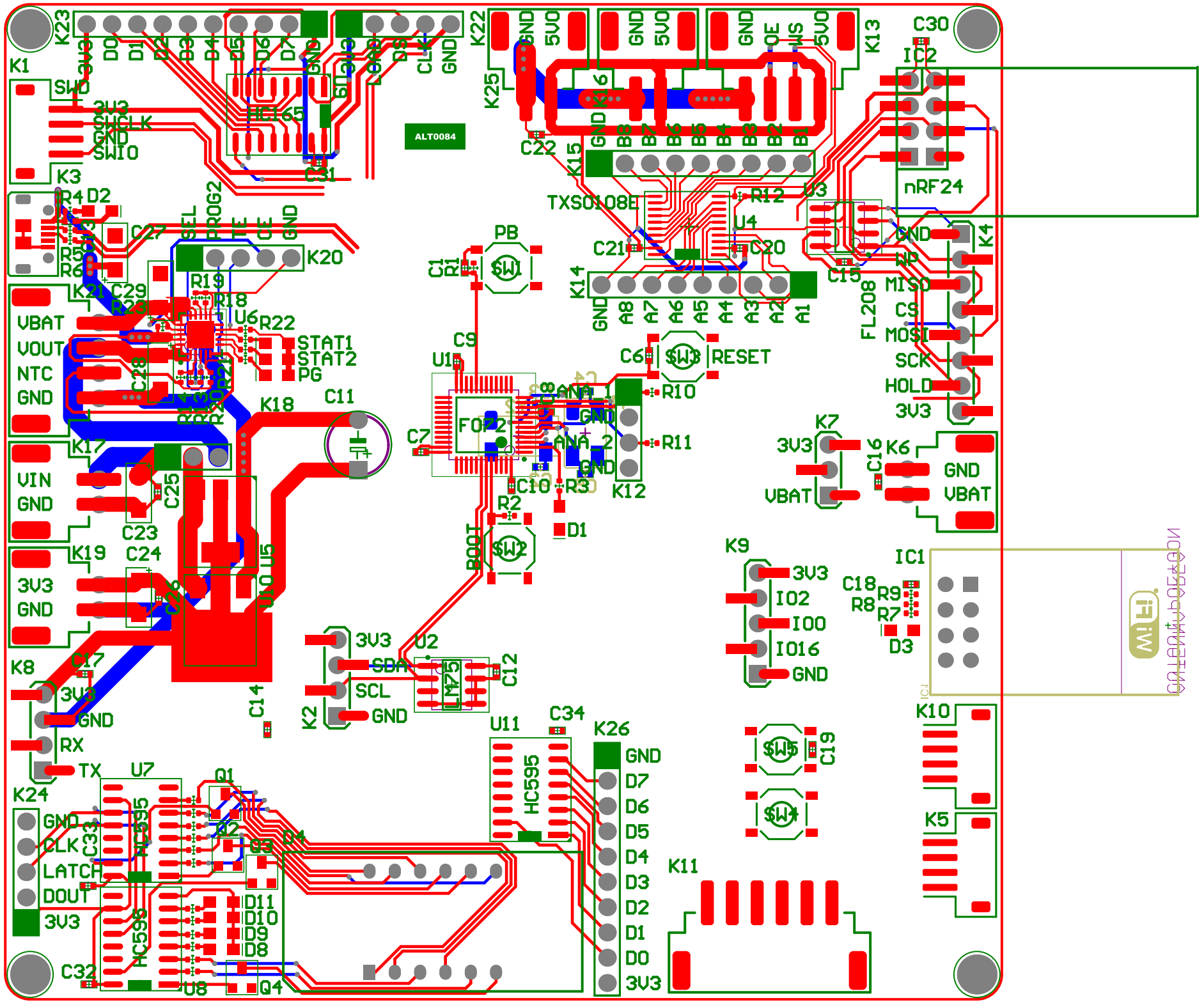

ALT0084
K23
K22
K13
K1
K3
K25
K15
K14
K20
K21
K17
K18
K19
K8
K24
K2
K26
K11
K10
K5
K7
K6
K9
K4
K12
K16
IC1
IC2
nRF24
TXS0108E
FL208
PB
SW1
SW2
SW3
SW4
SW5
RESET
BOOT
STAT1
STAT2
PG
VBAT
VOUT
NTC
GND
VIN
3V3
SWD
SWCLK
SWIO
SEL
PROG2
TE
CE
SDA
SCL
RX
TX
CLK
LATCH
DOUT
IO2
IO0
IO16
MISO
CS
MOSI
SCK
HOLD
WP
U1
U2
U3
U4
U5
U6
U7
U8
U11
LM75
HC595
IC1

Comment	Description	Designator	Footprint	LibRef	Quantity
100nF	CAPACITOR 0402 CERAMIC	C1, C6, C7, C8, C9, C10, C12, C13, C14, C15, C16, C17, C18, C19, C20, C21, C22, C25, C26, C30, C31, C32, C33, C34	C0402	Passives_Capacitors_0402_TBD	24
6.8pF	CAPACITOR 0402 CERAMIC	C2, C3	C0402	Passives_Capacitors_0402_TBD	2
18pF	CAPACITOR 0402 CERAMIC	C4, C5	C0402	Passives_Capacitors_0402_TBD	2
220uF	CAPACITOR POLARISED	C11	C+5MM	220UF-5MM	1
10u16V		C23, C24, C27, C28, C29	1206C+_TANTAL-10u16V	Passives_Capacitors_Tantalum_1206C-TANTAL SIZE A-10u16V	5
0805		D1, D2, D3, D5, D6, D7, D8, D9, D10, D11	0805LED	LED_SMD_0805	10
LED_7Segment_HS-3461B		D4	HS3461-TH	LED_7Segment_HS-3461B	1
ESP8266 ESP-01	ESP8266 ESP-01	IC1	ESP8266 ESP-01	ESP8266 ESP-01	1
Communication_ISM_nRF24L01+	nRF24L01+	IC2	nRF24L01+_COMBO	Communication_ISM_nRF24L01+	1
Connector_ZH_SMD_4p_1.5_SWD		K1	ZH_SMD_4p_1.5	Connector_ZH_SMD_4p_1.5_SWD	1
Connector_Headers_SMD_M_4x1	SMD Header 4x1	K2, K8	Header_Male_2.54 4x1_COMBO	Connector_Headers_SMD_M_4x1	2
Connector_USB_SMD_USB_F_MICRO_V1	MICRO USB B FEMALE	K3	USB_F_Micro_V1	Connector_USB_SMD_USB_F_MICRO_V1	1
Connector_Headers_SMD_M_8x1	SMD Header 8x1	K4	Header_Male_2.54 8x1_COMBO	Connector_Headers_SMD_M_8x1	1
Connector_ZH_SMD_4p_1.5_UART		K5, K10	ZH_SMD_4p_1.5	Connector_ZH_SMD_4p_1.5_UART	2
Connector_XH_SMD_2p_POWER		K6, K17, K19	2.54_2p_THT+SMD	Connector_XH_SMD_2p_POWER	3
Connector_Headers_SMD_M_3x1	SMD Header 3x1	K7	Header_Male_2.54 3x1_COMBO	Connector_Headers_SMD_M_3x1	1
Connector_Headers_SMD_M_5x1	SMD Header 5x1	K9	Header_Male_2.54 5x1_COMBO	Connector_Headers_SMD_M_5x1	1
Connector_XH_SMD_6p		K11	2.54_6p	Connector_XH_SMD_6p	1
1X4		K12	HEADER-1X4	Connector_Headers_THT_1X4	1
Connector_XH_SMD_4p		K13	2.54_4p	Connector_XH_SMD_4p	1
1X9		K14, K15	HEADER-1X9	Connector_Headers_THT_1X9	2
Connector_XH_SMD_2p		K16, K25	2.54_2p	Connector_XH_SMD_2p	2
Connector_Headers_THT_1X3		K18	HEADER-1X3	Connector_Headers_THT_1X3	1
1X5		K20	HEADER-1X5	Connector_Headers_THT_1X5	1
Connector_XH_SMD_4p		K21	2.54_4p_THT+SMD	Connector_XH_SMD_4p	1
Connector_Headers_THT_1X5		K22, K24	HEADER-1X5	Connector_Headers_THT_1X5	2
Connector_Headers_THT_1X10		K23, K26	HEADER-1X10	Connector_Headers_THT_1X10	2
MOUNTING_small	MOUNTING HOLE - NON INSTALLABLE	M1, M2, M3, M4	MOUNTING M3 small	MOUNTING_small	4
2N7002	N CHANNEL MOSFET 2N7002 SOT23	Q1, Q2, Q3, Q4	SOT23-GDS	2N7002-SOT23	4
10K	RESISTOR 0402 VALUE TO BE DETERMINED	R1, R2, R8, R9, R10, R11, R12, R20, R21, R22, R23	R0402	Passives_Resistors_0402_TBD	11
1K	RESISTOR 0402 VALUE TO BE DETERMINED	R3, R4, R7, R19, R32, R33, R34, R35	R0402	Passives_Resistors_0402_TBD	8
22R	RESISTOR 0402 VALUE TO BE DETERMINED	R5, R6	R0402	Passives_Resistors_0402_TBD	2
110K	RESISTOR 0402 VALUE TO BE DETERMINED	R13	R0402	Passives_Resistors_0402_TBD	1
330K	RESISTOR 0402 VALUE TO BE DETERMINED	R14	R0402	Passives_Resistors_0402_TBD	1
470	RESISTOR 0402 VALUE TO BE DETERMINED	R15, R16, R17	R0402	Passives_Resistors_0402_TBD	3
25K	RESISTOR 0402 VALUE TO BE DETERMINED	R18	R0402	Passives_Resistors_0402_TBD	1
180R	RESISTOR 0402 VALUE TO BE DETERMINED	R24, R25, R26, R27, R28, R29, R30, R31	R0402	Passives_Resistors_0402_TBD	8
SW-5x5	Switch 5x5	SW1	1P1T_SW_5x5	Mechanical_Switch_1P1T_SMD_SW-5x5	1
Mechanical_Switch_1P1T_SMD_SW-5x5	Switch 5x5	SW2, SW3	1P1T_SW_5x5	Mechanical_Switch_1P1T_SMD_SW-5x5	2
FLASH	Switch 5x5	SW4	1P1T_SW_5x5	Mechanical_Switch_1P1T_SMD_SW-5x5	1
RST	Switch 5x5	SW5	1P1T_SW_5x5	Mechanical_Switch_1P1T_SMD_SW-5x5	1
STM32F072CBT6		U1	STM-LQFP48_N	Microcontrollers_ST_ARM_STM32F0_STM32F072CBT6	1
LM75		U2	SO8_N	LM75	1
S25FL208K		U3	SO8_N	S25FL208K	1
TXS0108E	8-bit Bi-directional level-shifting voltage translator for open-drain and push-pull applications	U4	TSSOP20	TXS0108E	1
LD1117-SOT223		U5, U10	SOT223	LD1117-SOT223	2
MCP73871	Battery charger	U6	QFN50P400X400X100-0_HS-21N	MCP73871	1
74595	8-BIT SFT REG WIRTH OUTPUT LCH	U7, U8, U11	SO16	74HC_SIPO_SMD_74595	3
74HC165D	Parallel in, Serial Out	U9	SO16	74HC165D	1
6035		Y1	XTAL 6035	6035 Quartz	1
MC-306		Y2	XTAL MC-306	32k Quartz	1