# Class D1.4

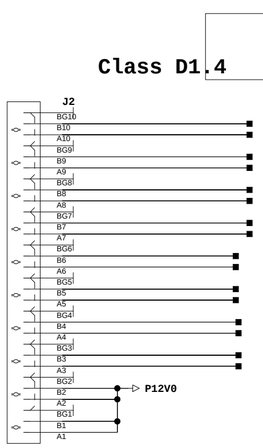


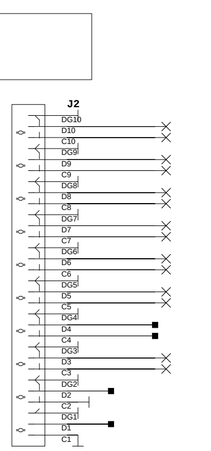


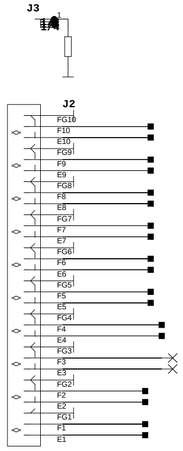


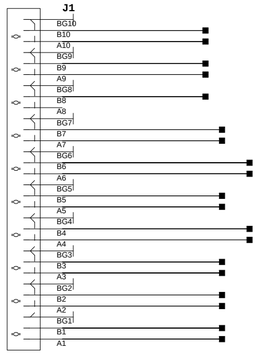


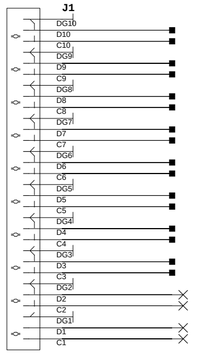


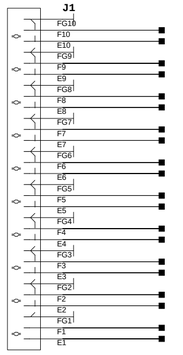


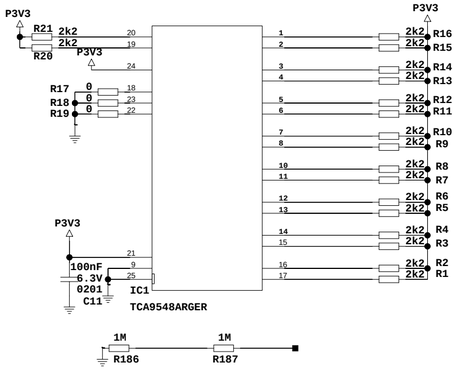


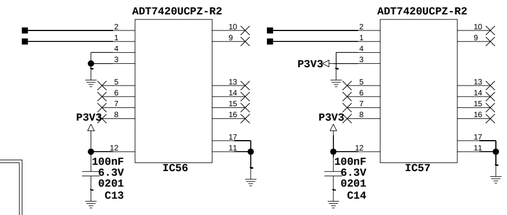

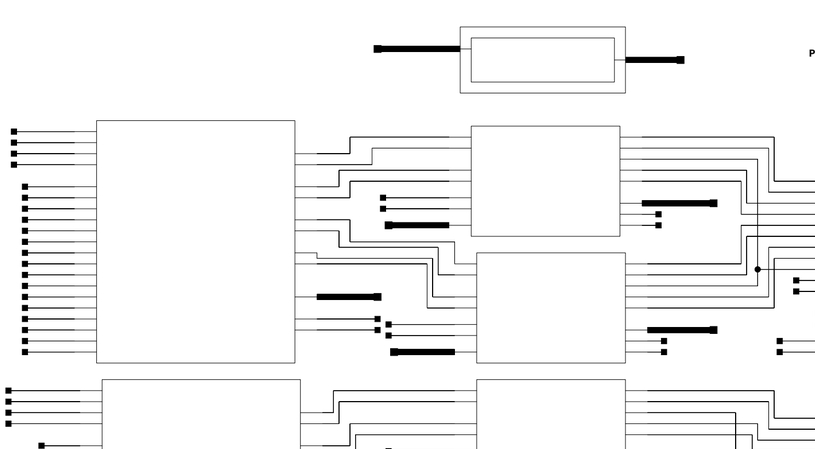


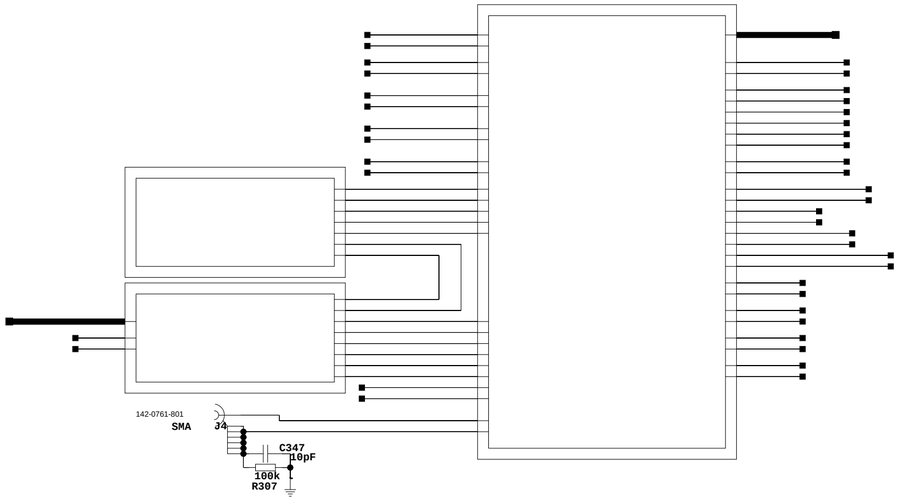


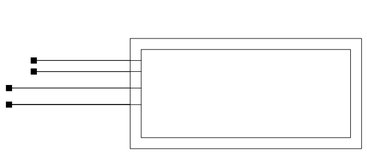

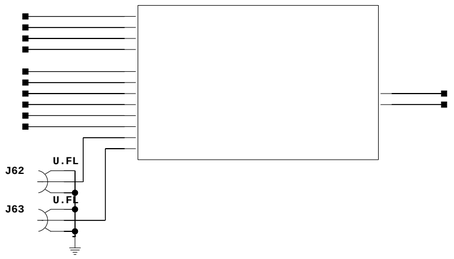


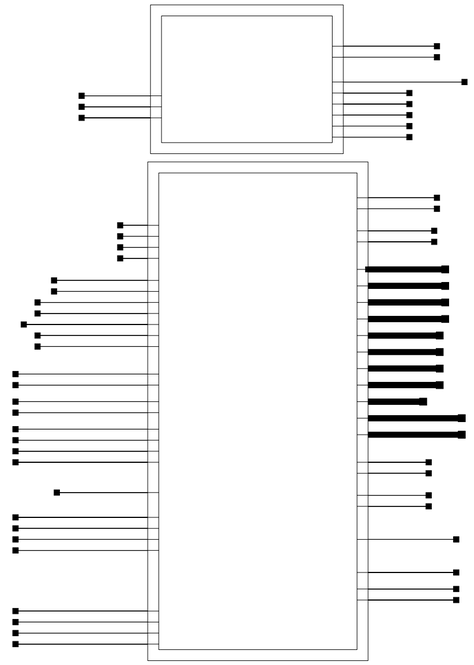

| | | |
|---|---|---|
| | ARTIQ Sinara | |
| | Sayma_RTM | |
| | 1 | v0.95 |
| G.K. | 1 23 | 22/12/2016:22:23 |

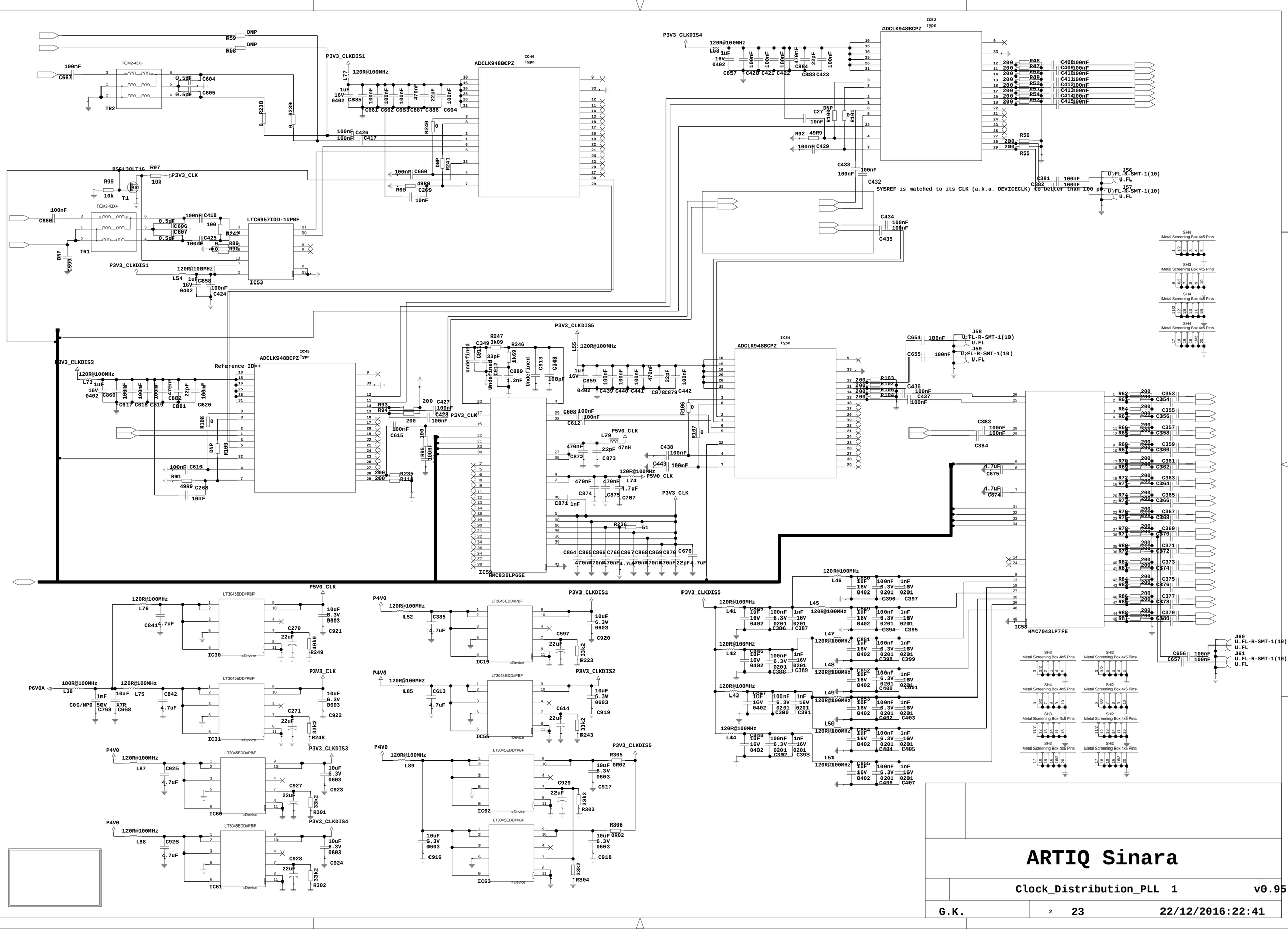


# ARTIQ Sinara

| | | |
|---|---|---|
| Clock_Distribution_PLL 1 | | v0.95 |
| G.K. | 2 23 | 22/12/2016:22:41 |

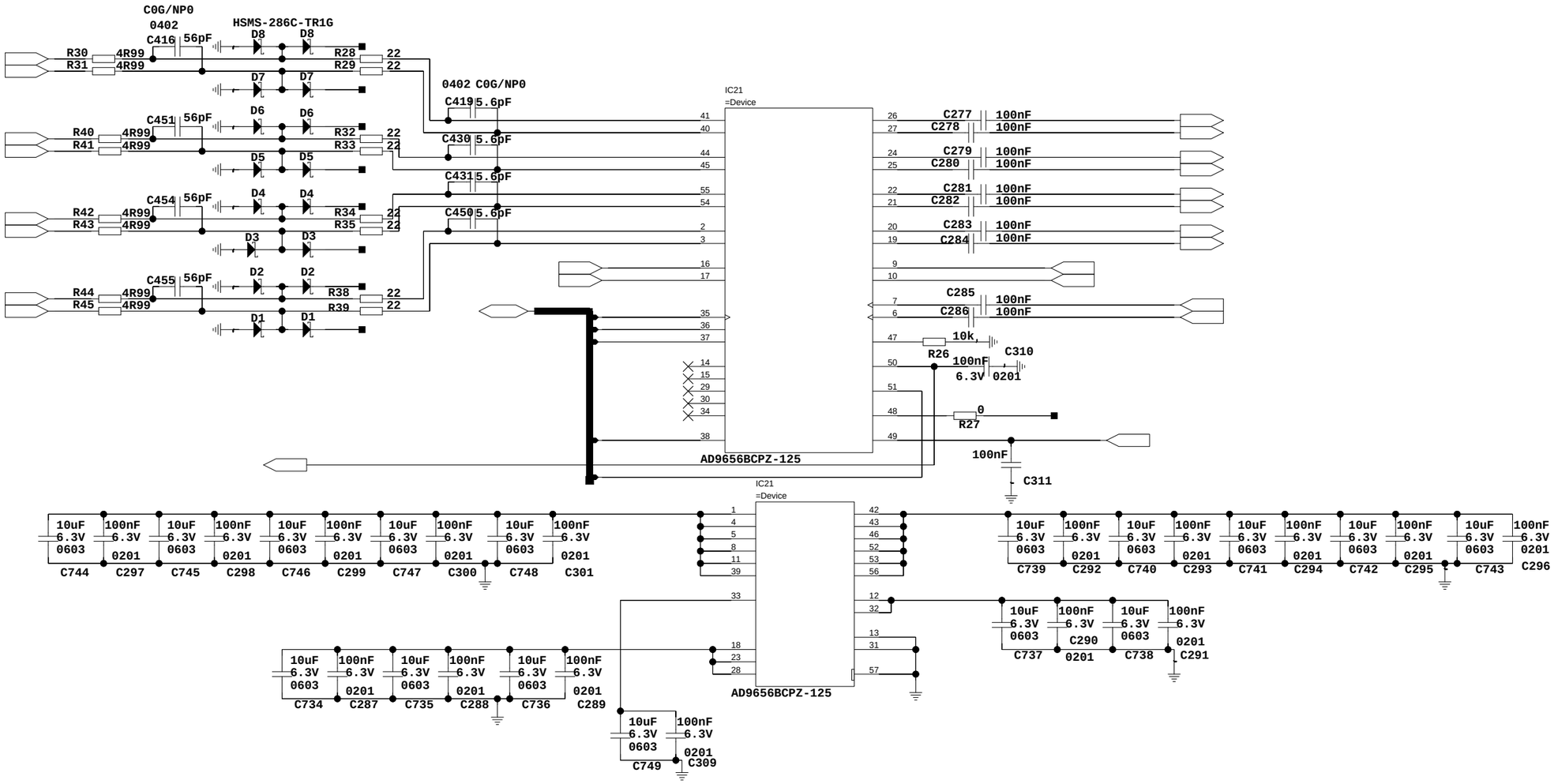


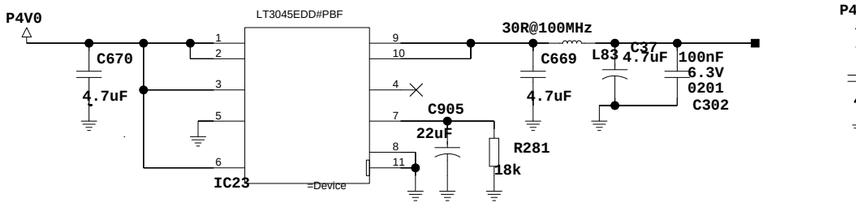


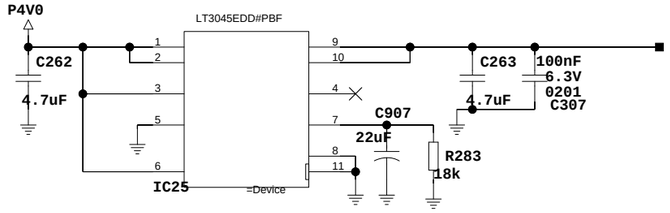


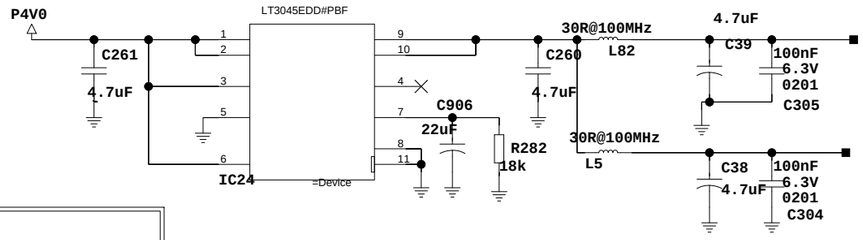


# ADC_JESD204B

## ARTIQ Sinara

| | | |
|---|---|---|
| | 1 | v0.95 |
| G.K. | 3 23 | 22/12/2016:10:55 |

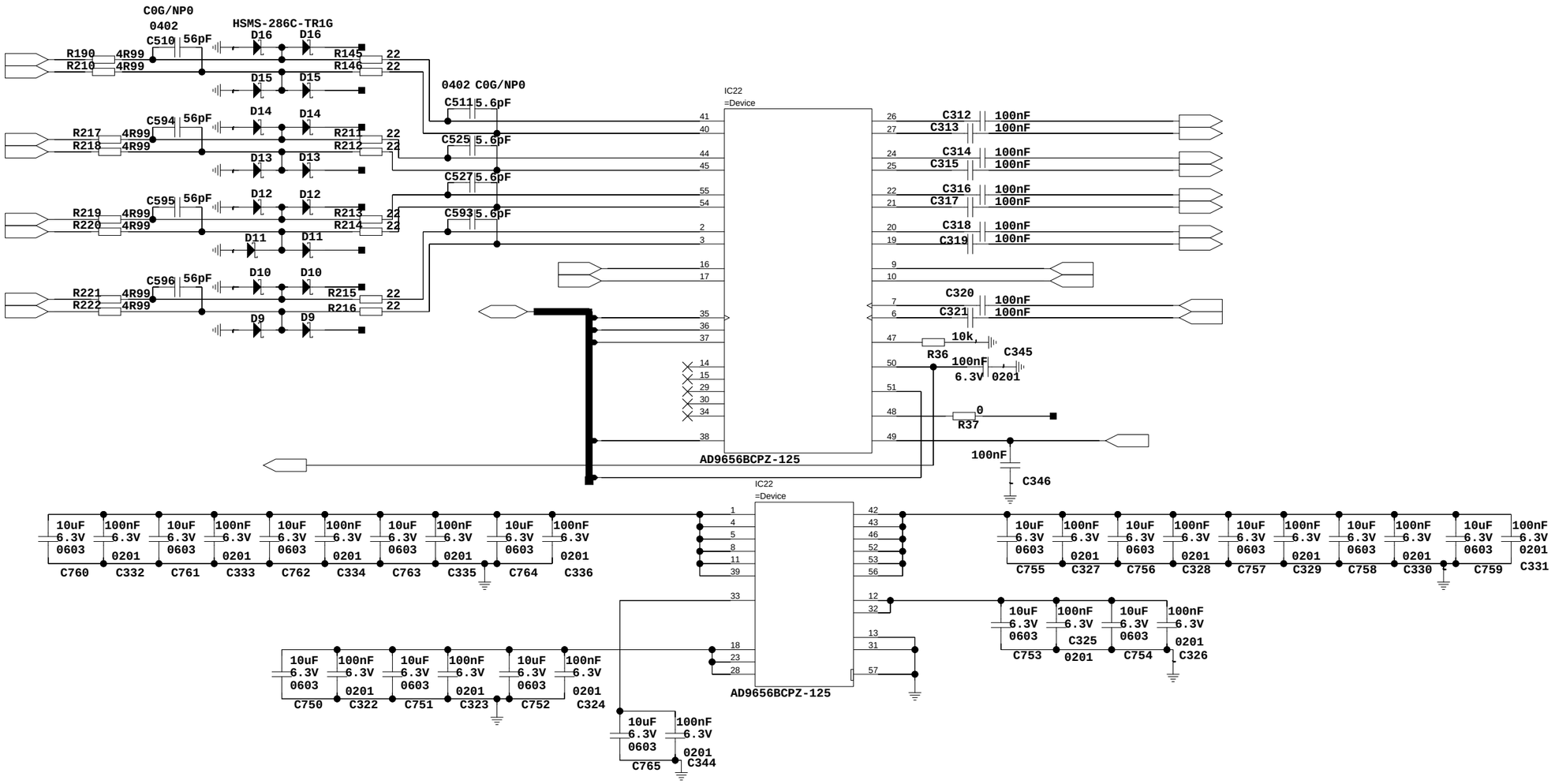


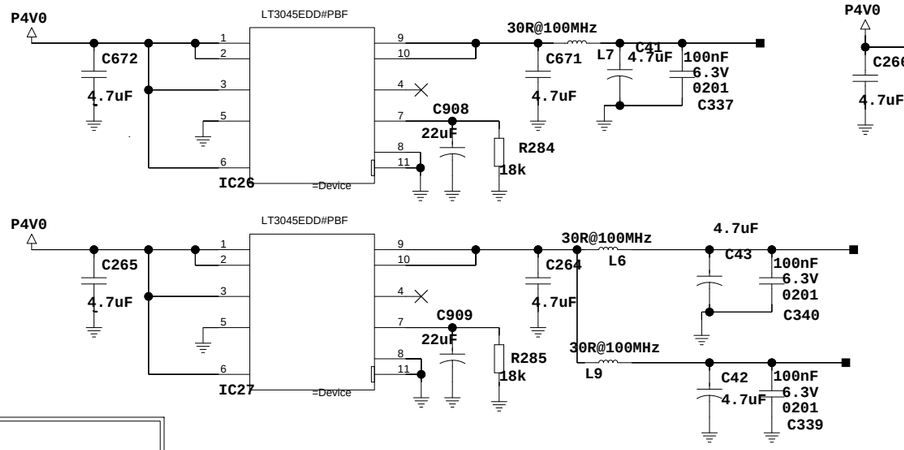


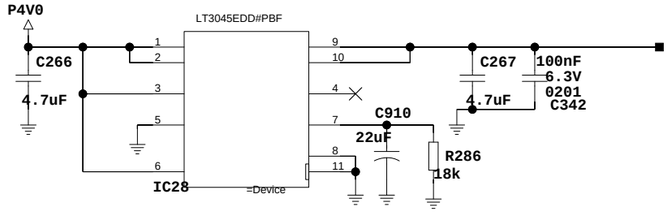


# ADC_JESD204B

## ARTIQ Sinara

| | | |
|---|---|---|
| | 1 | v0.95 |
| G.K. | 4 23 | 22/12/2016:10:55 |

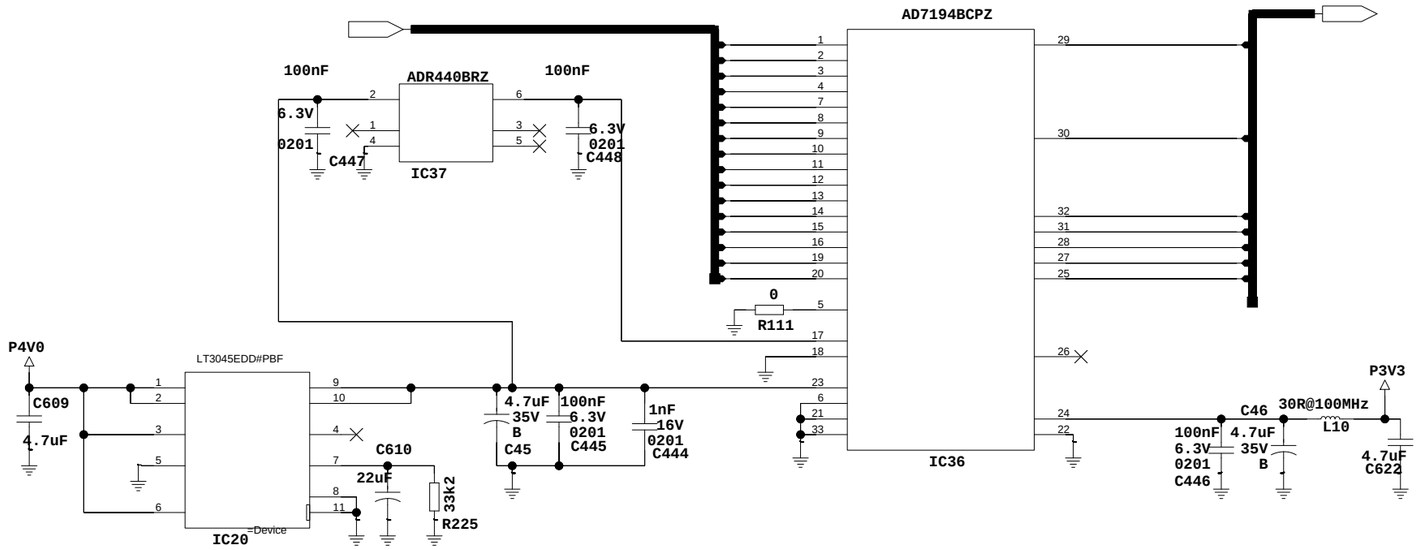


# ARTIQ Sinara

# CAL_ADC

| | | |
|---|---|---|
| | 1 | v0.95 |
| G.K. | 23 | 22/12/2016:22:41 |

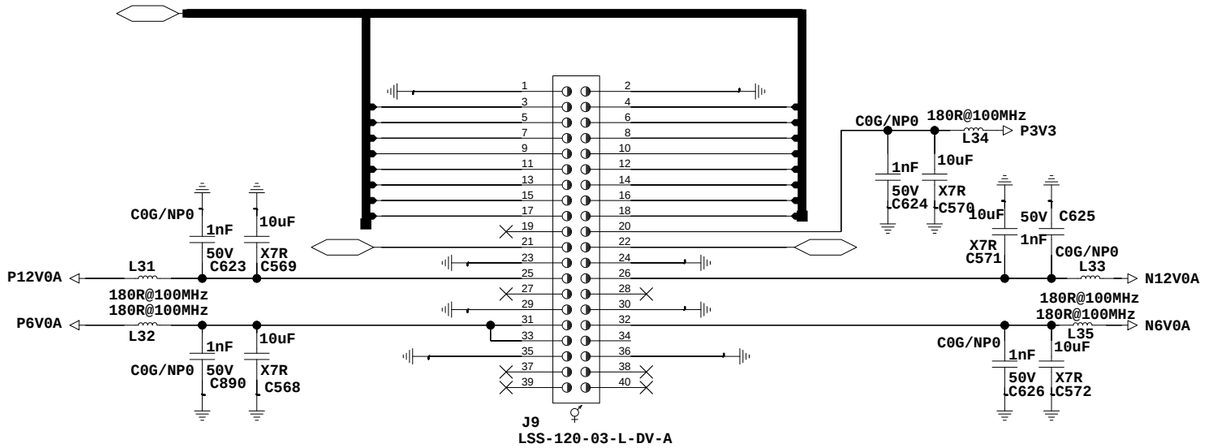


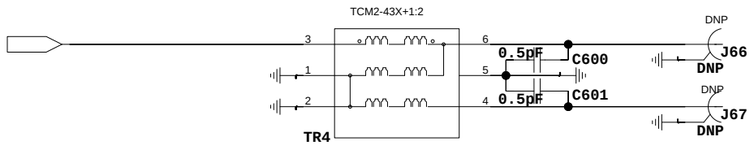


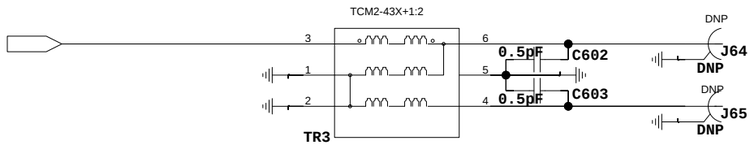


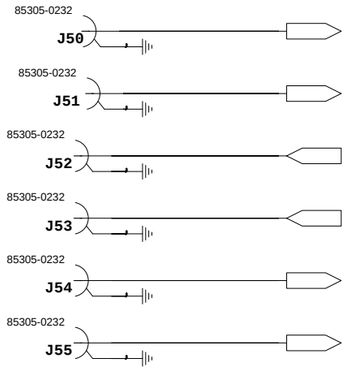


# ARTIQ Sinara

# CLK_Mezzanine

| | | |
|---|---|---|
| | 1 | v0.95 |
| G.K. | 6 23 | 21/12/2016:23:49 |

# IOVDD=3.3

IC3 =Device AD9154BCPZ

1uF 16V 0402 C629 | 100nF 6.3V 0201 C52 | 100nF 6.3V 0201 C51 | 100nF 6.3V 0201 C50 | 100nF 6.3V 0201 C49

W2L16C473MAT1S C59: 100nF 6.3V 0201 C58 | 100nF 6.3V 0201 C57 | 1nF 16V 0201 C56 | 1nF 16V 0201 C55 | 100nF 6.3V 0201 C53 | 1nF 16V 0201 C54 | 4.7uF 35V B C3

W2L16C473MAT1S C60: 100nF 6.3V 0201 C98 | 100nF 6.3V 0201 C97 | 1nF 16V 0201 C96 | 1nF 16V 0201 C95 | 100nF 6.3V 0201 C93 | 1nF 16V 0201 C94 | 4.7uF 35V B C6

W2L16C473MAT1S C61: 100nF 6.3V 0201 C108 | 100nF 6.3V 0201 C107 | 1nF 16V 0201 C106 | 1nF 16V 0201 C105 | 100nF 6.3V 0201 C103 | 1nF 16V 0201 C104 | 4.7uF 35V B C7

R23 1 1uF 16V C631
R22 1 0402 1uF 16V C630
0402

R188 4k02

P4V0

LT3045EDD#PBF IC11 =Device
C157 4.7uF | C156 4.7uF | C897 22uF | 33k2 R287
30R@100MHz L3 | 100nF 6.3V 0201 C159
30R@100MHz L2 | 100nF 6.3V 0201 C160

W2L16C473MAT1S C62: 100nF 6.3V 0201 C68 | 100nF 6.3V 0201 C67 | 1nF 16V 0201 C66 | 1nF 16V 0201 C65 | 100nF 6.3V 0201 C63 | 1nF 16V 0201 C64 | 4.7uF 35V B C4 | 47uF 16V C C708 | 100nF 6.3V 0201 C73 | 100nF 6.3V 0201 C74 | 100nF 6.3V 0201 C75 | 1nF 16V 0201 C76 | 1nF 16V 0201 C77

W2L16C473MAT1S C69: 1nF 16V 0201 C91 | 1nF 16V 0201 C92 | 1nF 16V 0201 C81 | 1nF 16V 0201 C80 | 100nF 6.3V 0201 C78 | 1nF 16V 0201 C79 | 4.7uF 35V B C5 | 47uF 16V C C709 | 100nF 6.3V 0201 C86 | 100nF 6.3V 0201 C87 | 100nF 6.3V 0201 C88 | 1nF 16V 0201 C89 | 1nF 16V 0201 C90

W2L16C473MAT1S C70: 100nF 6.3V 0201 C118 | 1nF 16V 0201 C116 | 1nF 16V 0201 C115 | 1nF 16V 0201 C114 | 4.7uF 35V B C8 | C712 47uF 16V C

1nF 16V 0201 C125 | 100nF 6.3V 0201 C123 | 1nF 16V 0201 C124 | 4.7uF 35V B C9 | 47uF 16V C C713

1nF 16V 0201 C128 | 100nF 6.3V 0201 C126 | 4.7uF 35V B C915 | 47uF 16V C C715

100nF 6.3V 0201 C132 | 1nF 16V 0201 | 4.7uF 35V B C12 | 47uF 16V C C130 C716

P1V8 120R@100MHz L36 | 1uF 16V 0402 C632 | 1nF 16V 0201 C162

P2V0 LT3045EDD#PBF IC5 =Device
C145 4.7uF | C144 4.7uF | 100nF 6.3V 0201 C15 | C891 | 22uF | 13k R289

P2V0 LT3045EDD#PBF IC7 =Device
C149 4.7uF | C148 4.7uF | 100nF 6.3V 0201 C17 | C892 | 22uF | 13k R292

P2V0 LT3045EDD#PBF IC6 =Device
C147 4.7uF | C146 4.7uF | 100nF 6.3V 0201 C16 | C893 | 22uF | 13k R290

P2V0 LT3045EDD#PBF IC8 =Device
C151 4.7uF | C150 4.7uF | 100nF 6.3V 0201 C914 | C894 | 22uF | 13k R293

P2V0 LT3045EDD#PBF IC9 =Device
C153 4.7uF | C152 4.7uF | 100nF 6.3V 0201 C31 | C895 | 22uF | 13k R294

P2V0 LT3045EDD#PBF IC10 =Device
4.7uF C155 | C154 4.7uF | 100nF 6.3V 0201 C32 | C896 | 22uF | 13k R291

# ARTIQ Sinara

# DAC_JESD204B

| | | |
|---|---|---|
| | 1 | v0.95 |
| G.K. | 23 | 22/12/2016:08:40 |

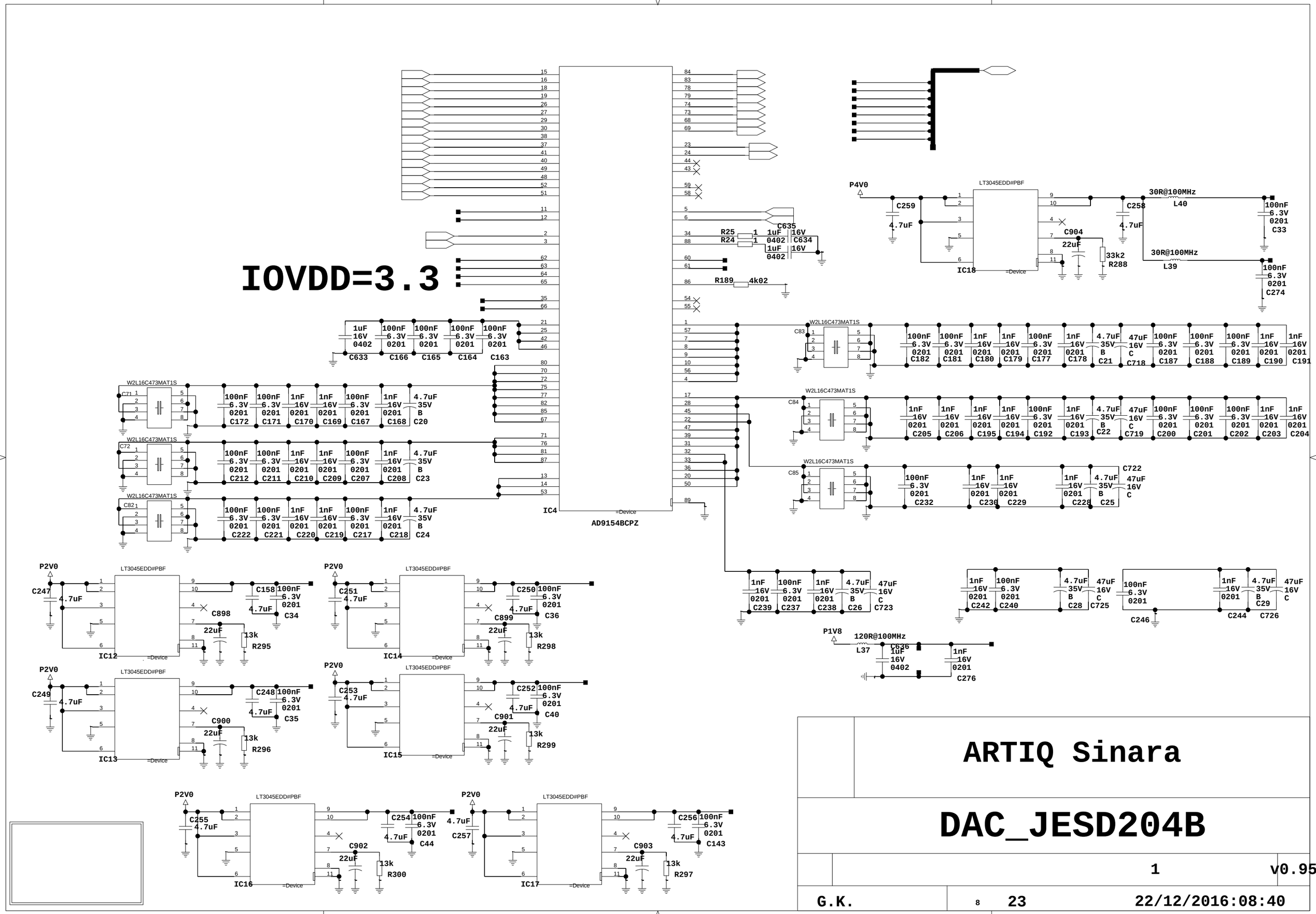


# ARTIQ Sinara

# DAC_JESD204B

1 v0.95

G.K. 8 23 22/12/2016:08:40

P3V3F
L78
120R@100MHZ
C352
100nF
DNP
OSC2
=Value
XC7A15T-1CSG325
C458 100nF
C459 100nF
C133 100nF
C134 100nF
C135 100nF
C136 100nF
C137 100nF
C138 100nF
C139 100nF
C140 100nF
MGTAVTT
100
R113
A6
XC7A15T-1CSG325
J70
C452 100nF
C453 100nF
J71
C457 100nF
C456 100nF
R114
P3V3F
100
R116 0
P3V3F
R112 0
XC7A15T-1CSG325
XC7A15T-1CSG325
P3V3F
R250 0
R251 0
R252 0
R253 0
10k R255
10k R256
10k R257
10k R258
R254 10k
R172 10k
R173 10k
R174 10k
P1V8F
J72
MTLW-106-07-L-D-250
R259 200
R46 200
XC7A15T-1CSG325
100nF
240
P1V8F
240
IC35
P1V8F
P1V8F
=Device
TXB0304RUTR
P3V3F
100nF C350
100nF C351
P1V8F P3V3F
P3V3F
OSC3
=Value
100nF C449
49R9 R115
XC7A15T-1CSG325
XC7A15T-1CSG325

# ARTIQ Sinara

# FPGA_7A15T

| | | |
|---|---|---|
| | 1 | v0.95 |
| G.K. | 23 | 06/01/2017:13:30 |

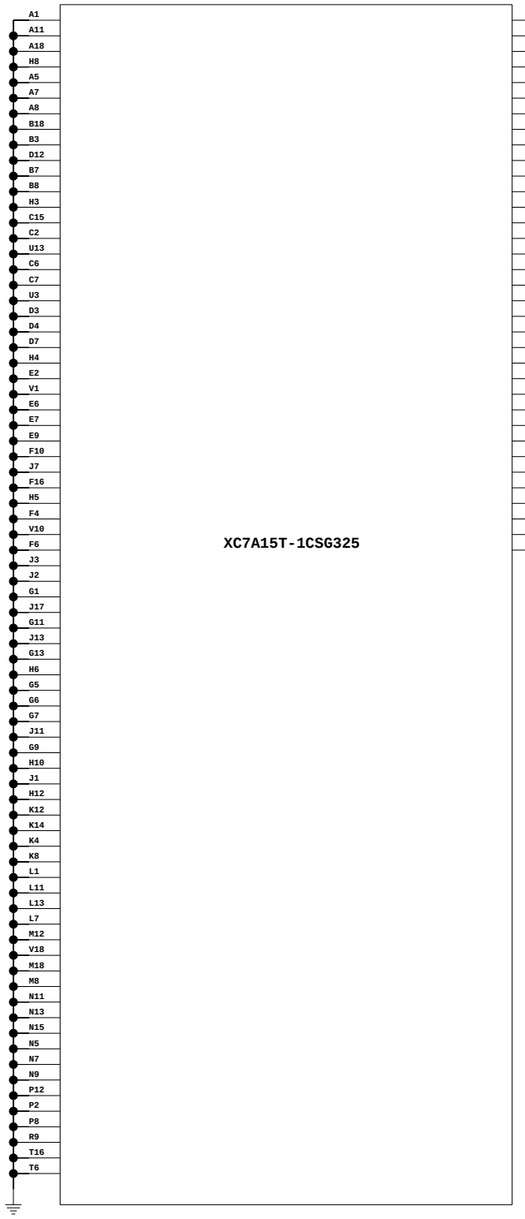


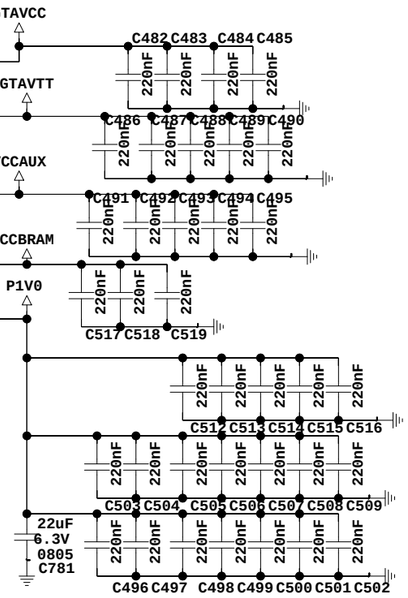


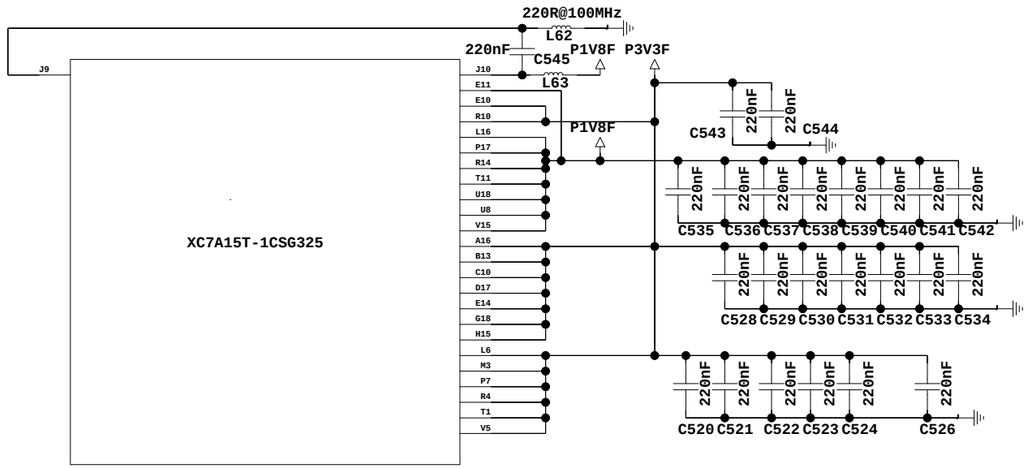


# ARTIQ Sinara

# FPGA_7A15T_POWER

| | | |
|---|---|---|
| | 1 | v0.95 |
| G.K. | 10 23 | 22/12/2016:22:39 |

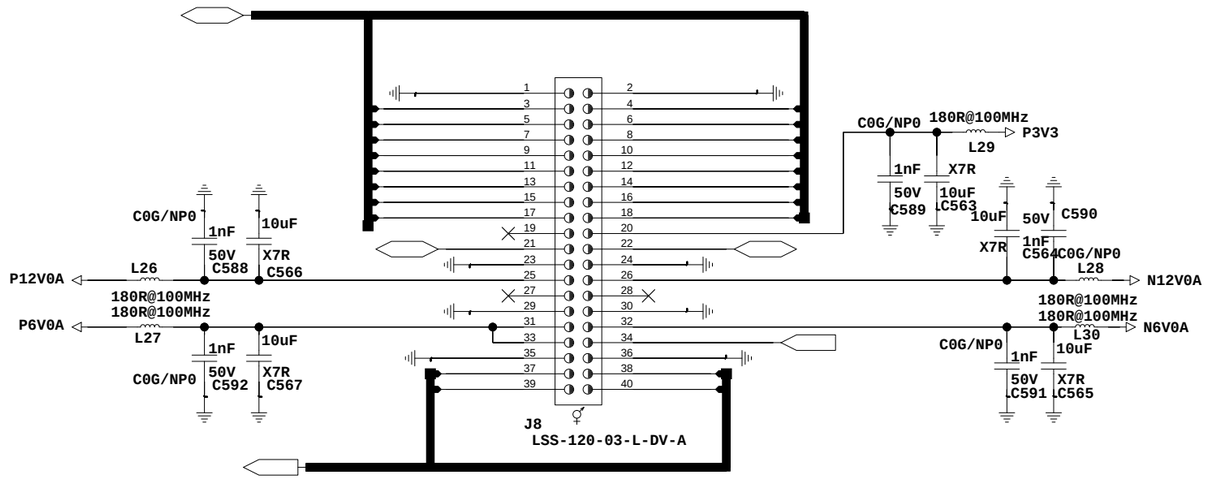


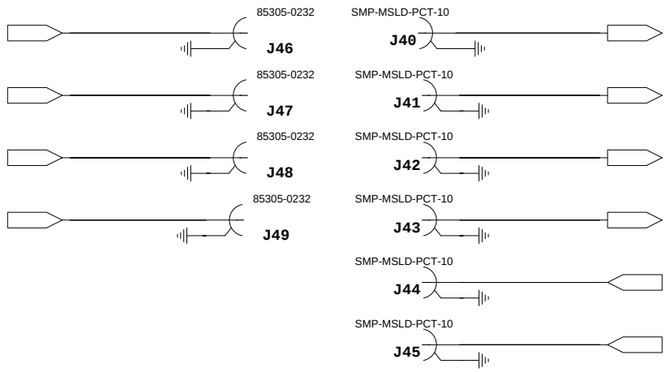


# ADC_DAC_AFE_Mezzanine

## ARTIQ Sinara

| | | |
|---|---|---|
| | 1 | v0.95 |
| G.K. | 11 23 | 22/12/2016:09:55 |

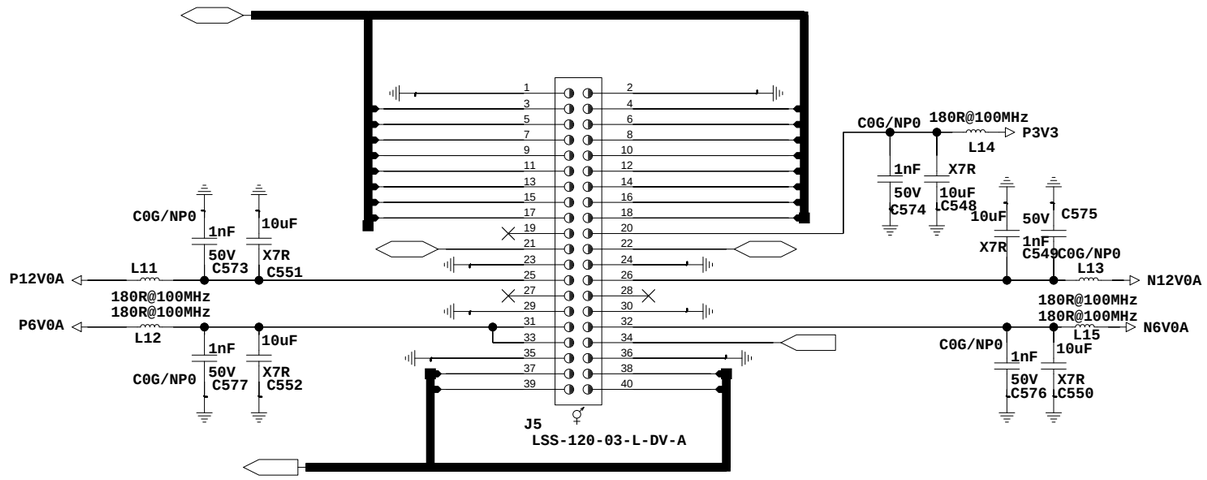


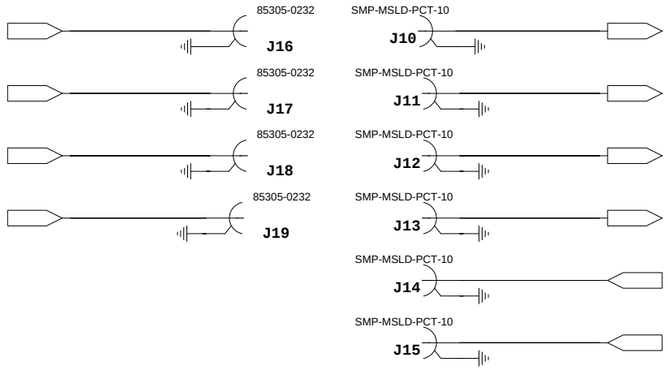


# ADC_DAC_AFE_Mezzanine

## ARTIQ Sinara

| | | |
|---|---|---|
| | 1 | v0.95 |
| G.K. | 12 23 | 22/12/2016:09:55 |

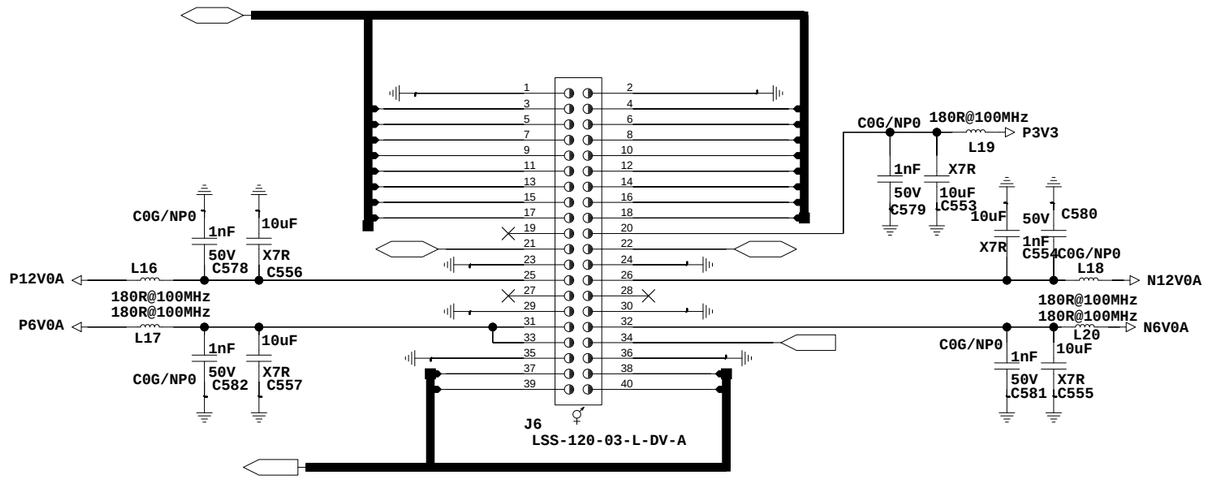


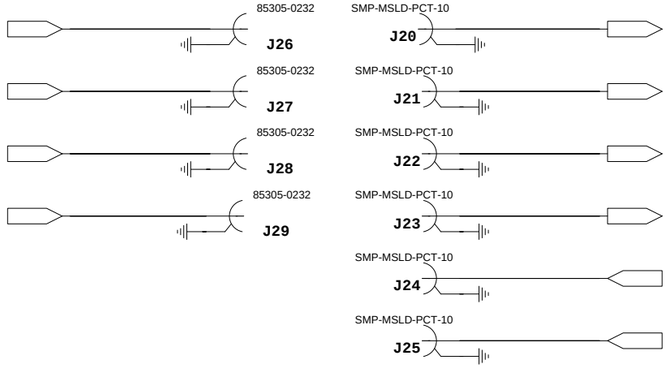


# ADC_DAC_AFE_Mezzanine

## ARTIQ Sinara

| | | |
|---|---|---|
| | 1 | v0.95 |
| G.K. | 13 23 | 22/12/2016:09:55 |

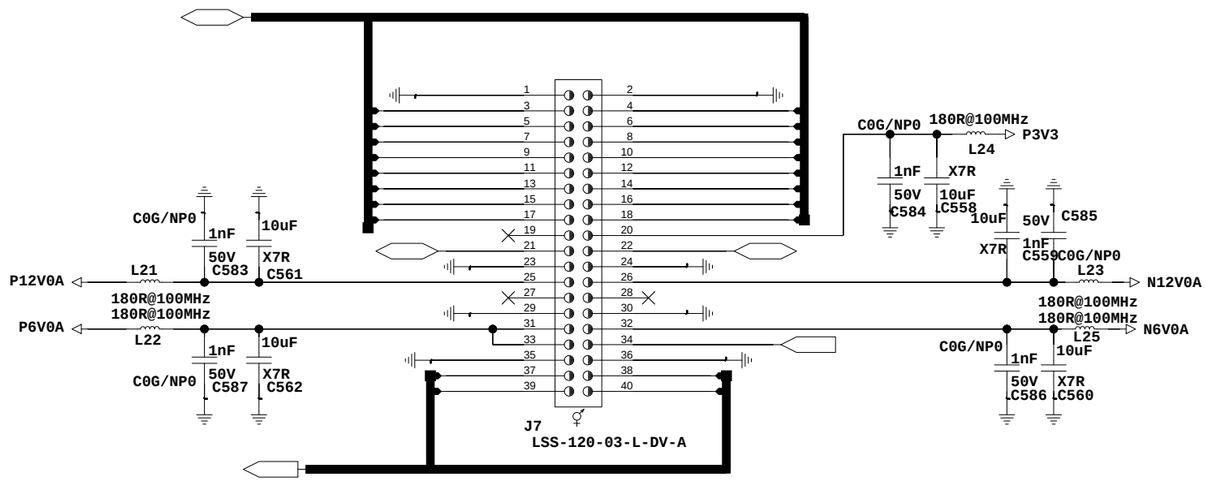


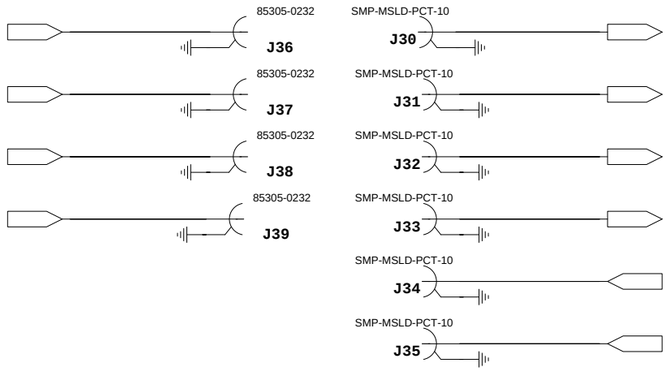


# ADC_DAC_AFE_Mezzanine

## ARTIQ Sinara

| | | |
|---|---|---|
| | 1 | v0.95 |
| G.K. | 14 23 | 22/12/2016:09:55 |

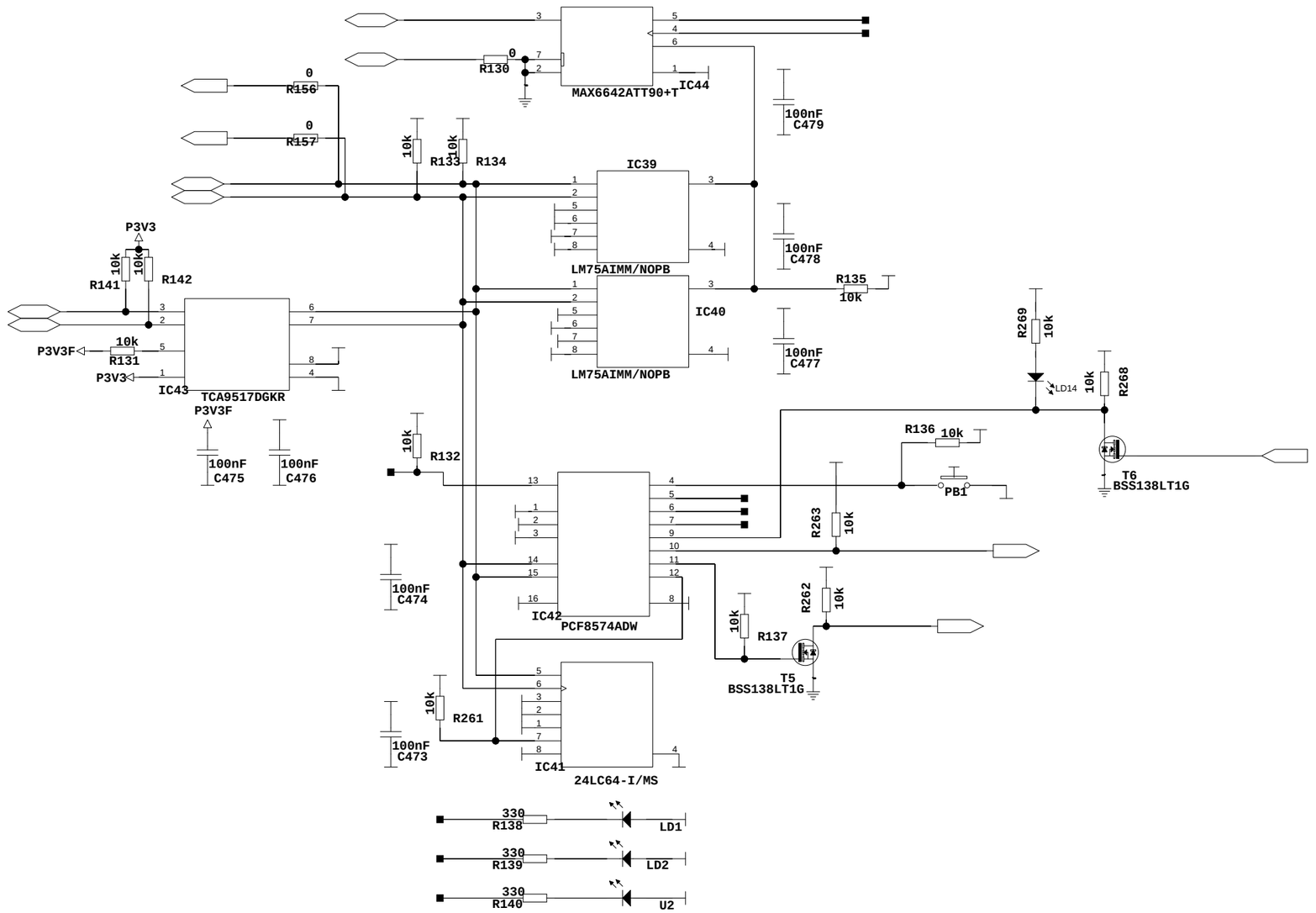


# check addresses

| | |
|---|---|
| | ARTIQ Sinara |
| | RTM_IPMI |
| | 1 v0.95 |
| G.K. | 15 23 21/12/2016:23:49 |

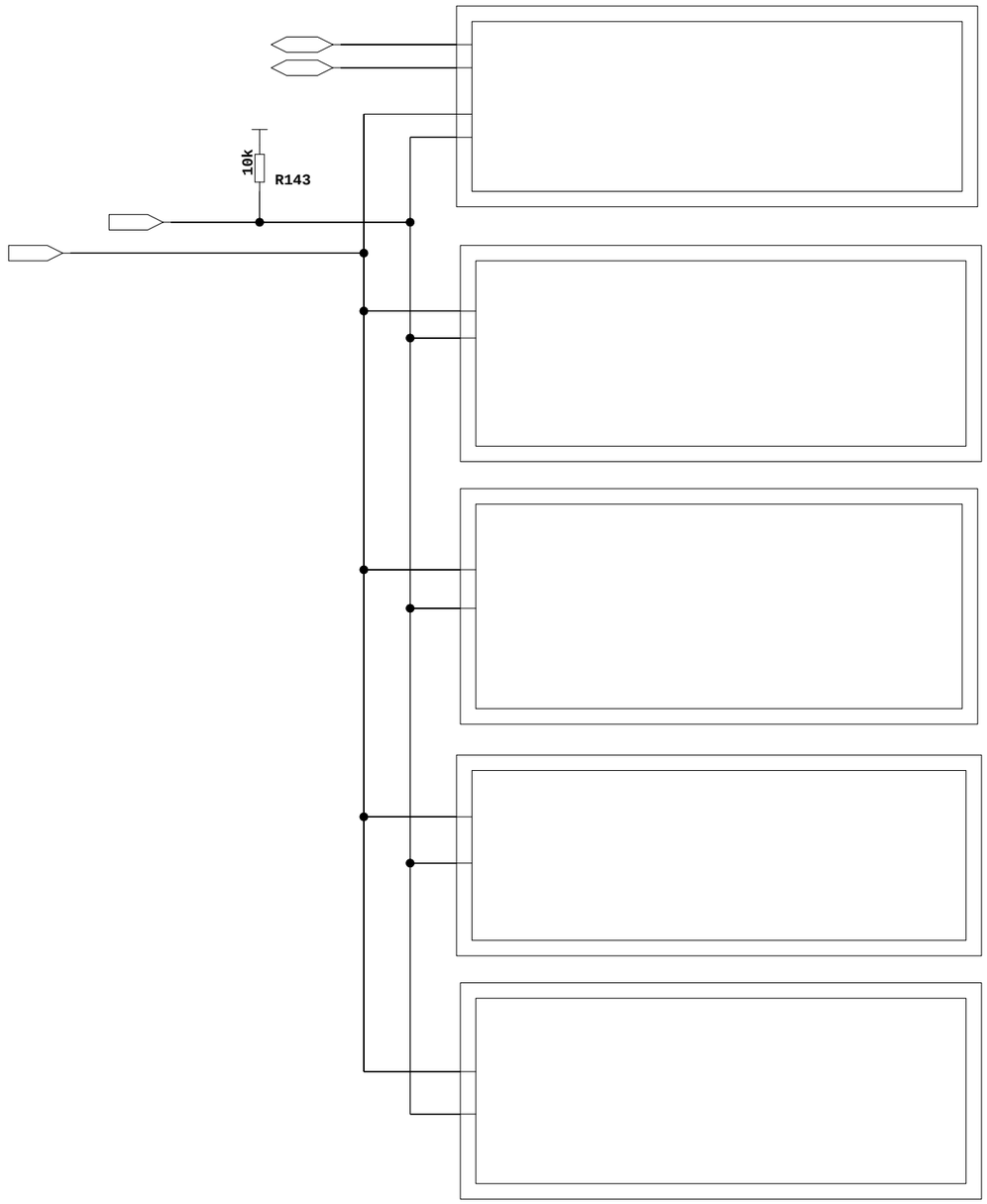


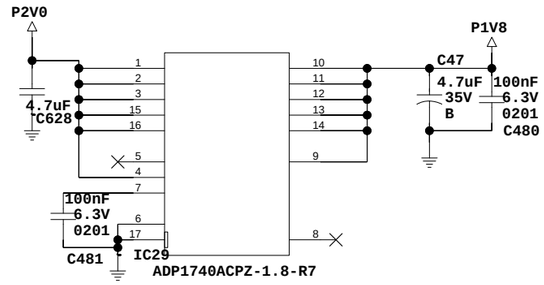


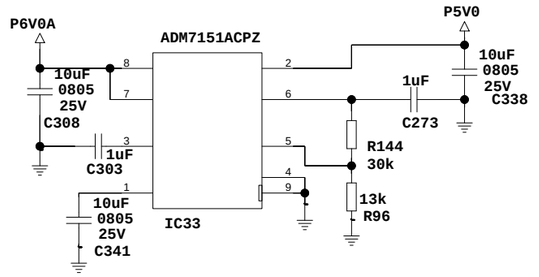


| | | |
|---|---|---|
| | ARTIQ Sinara | |
| | RTM_POWER_SUPPLY | |
| | 1 | v0.95 |
| G.K. | 16 23 | 23/12/2016:22:20 |

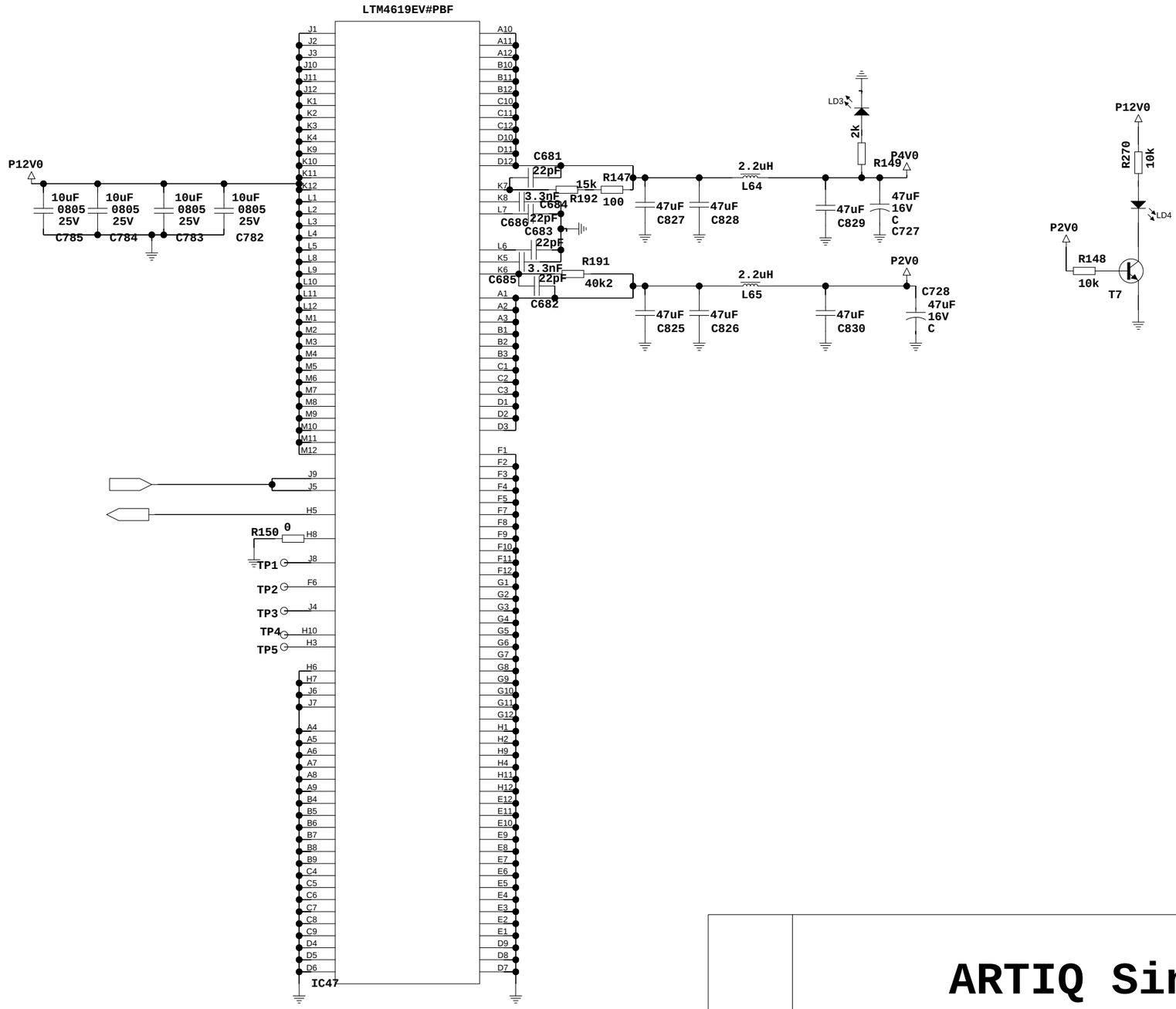


# ARTIQ Sinara

# PWR_Buck_2V_4V_4A

| | | |
|---|---|---|
| | 1 | v0.95 |
| G.K. | 17 23 | 22/12/2016:09:37 |

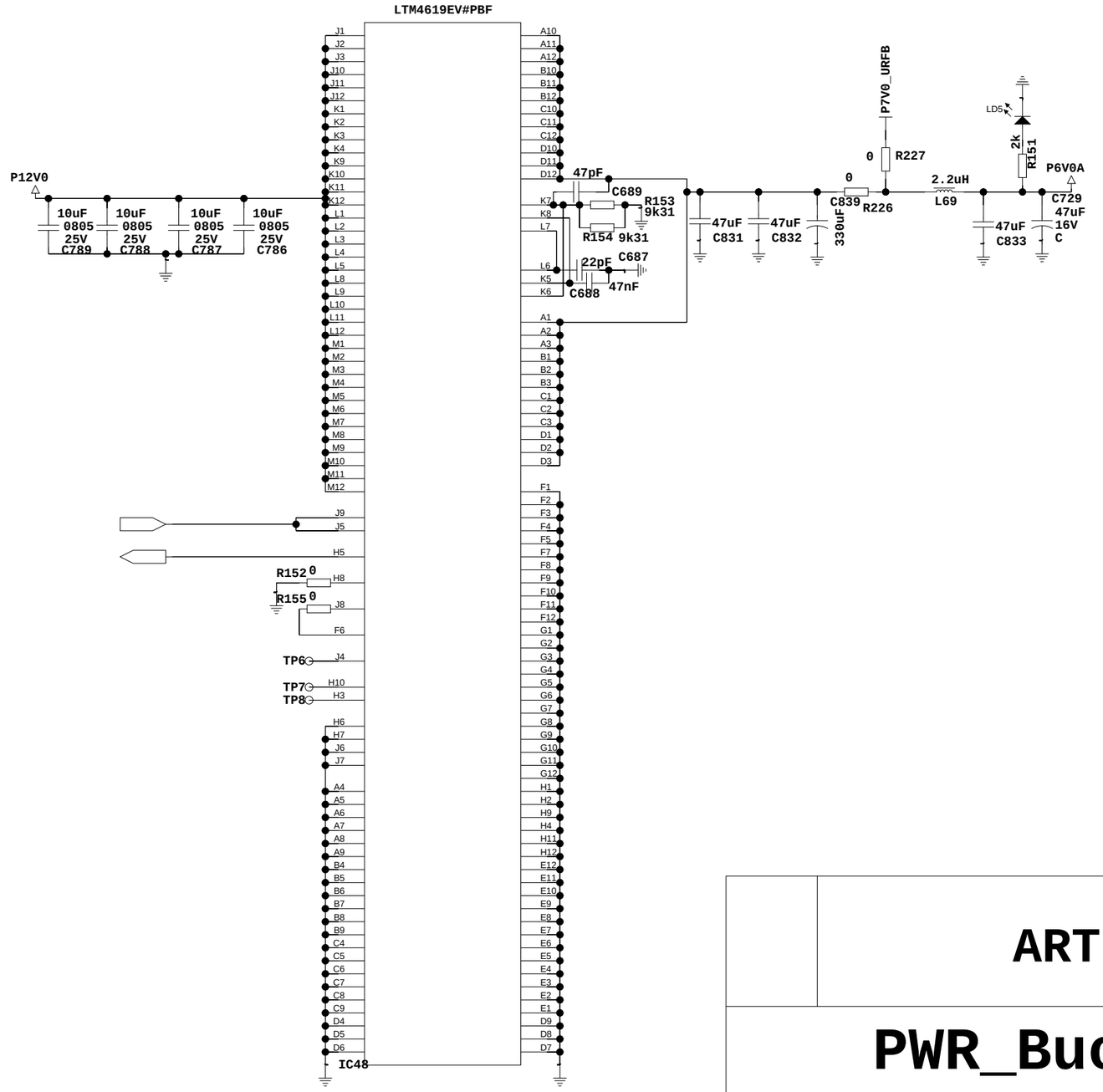


# ARTIQ Sinara

# PWR_Buck_6V_8A

| | | |
|---|---|---|
| | 1 | v0.95 |
| G.K. | 18 23 | 21/12/2016:23:49 |

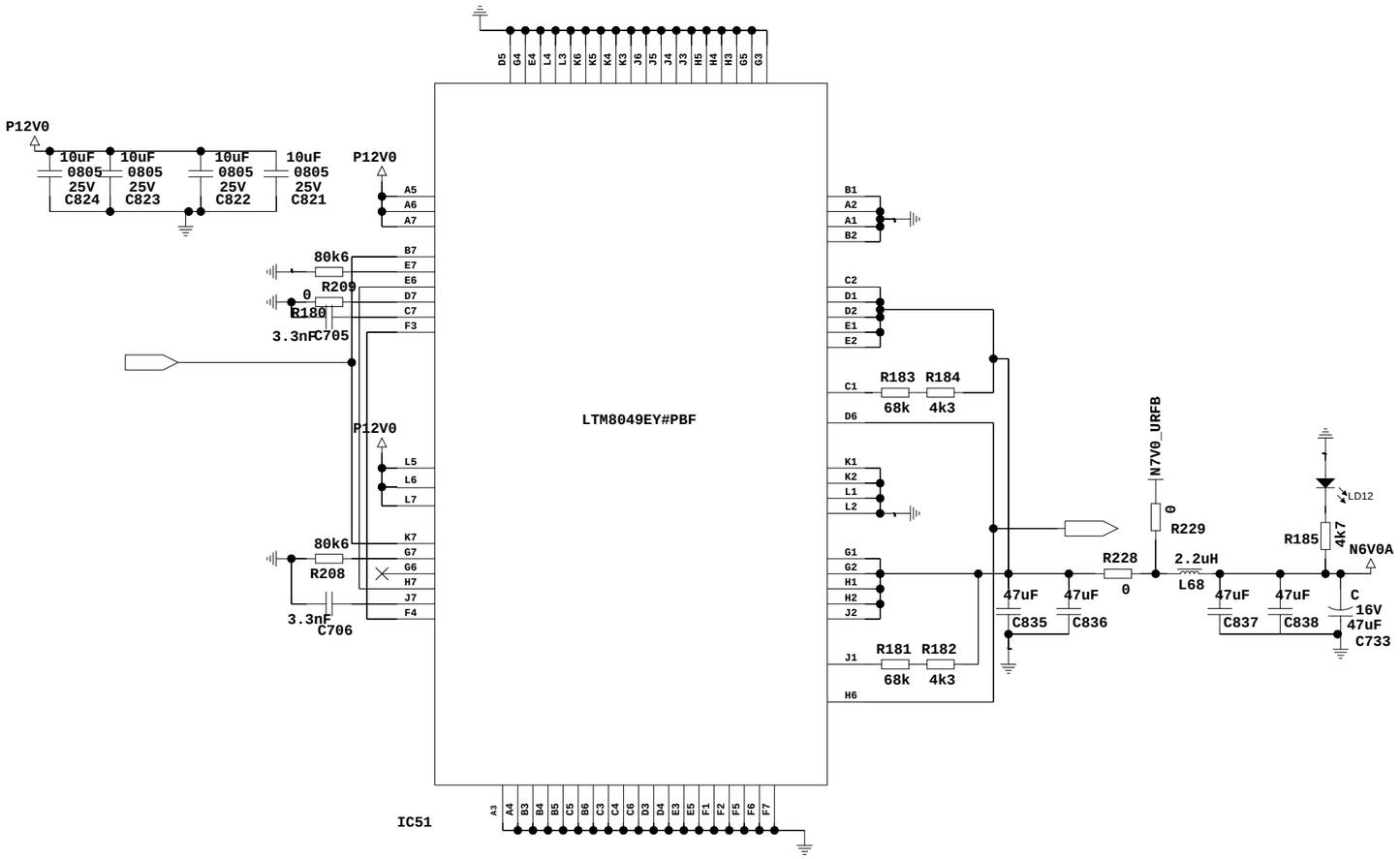


# ARTIQ Sinara

# PWR_SEPIC_N6V

| | | |
|---|---|---|
| | 1 | v0.95 |
| G.K. | 19 23 | 22/12/2016:22:39 |

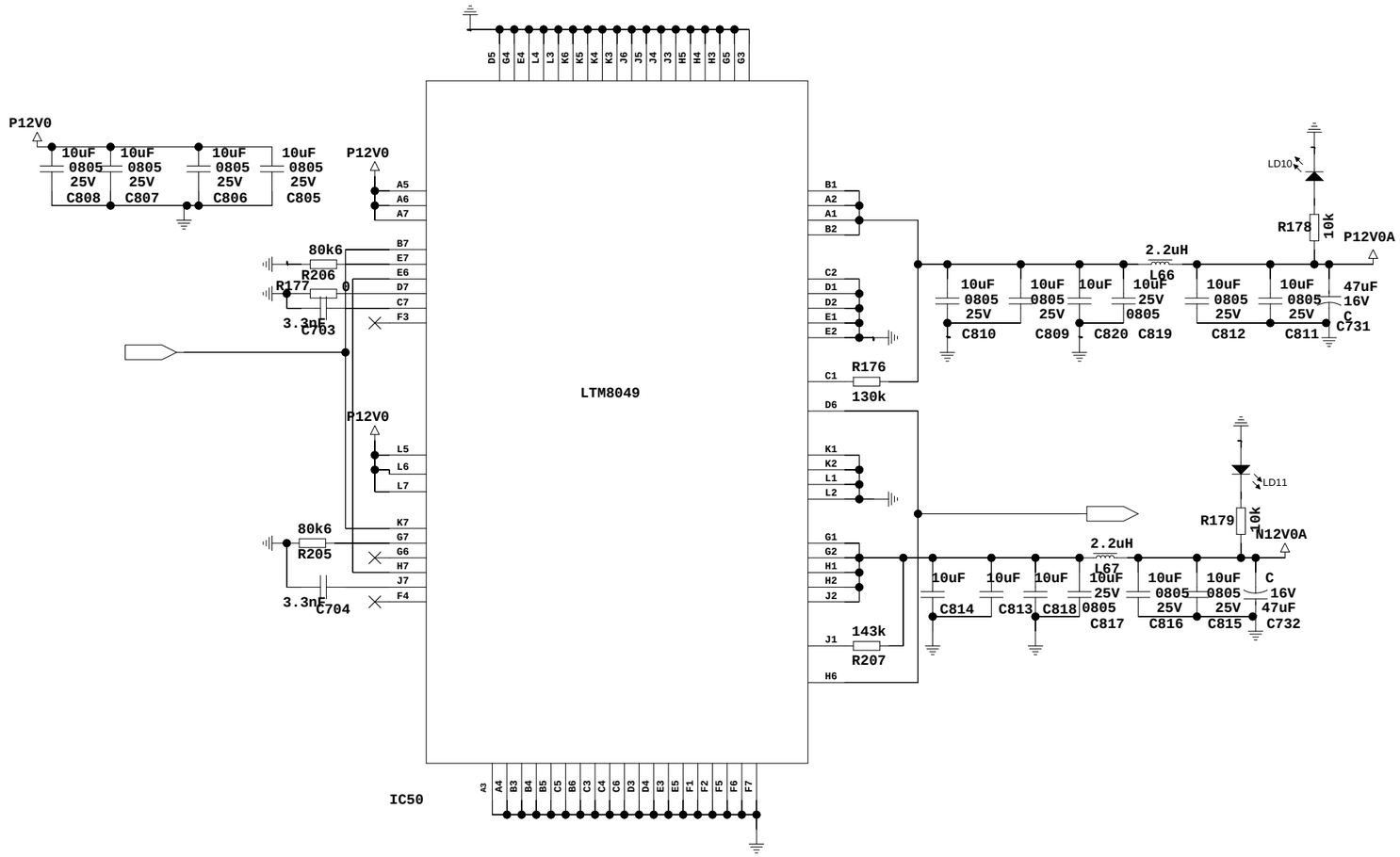


# ARTIQ Sinara

## PWR_SEPIC_P12V_N12V

| | | |
|---|---|---|
| | 1 | v0.95 |
| G.K. | 20 23 | 22/12/2016:22:39 |

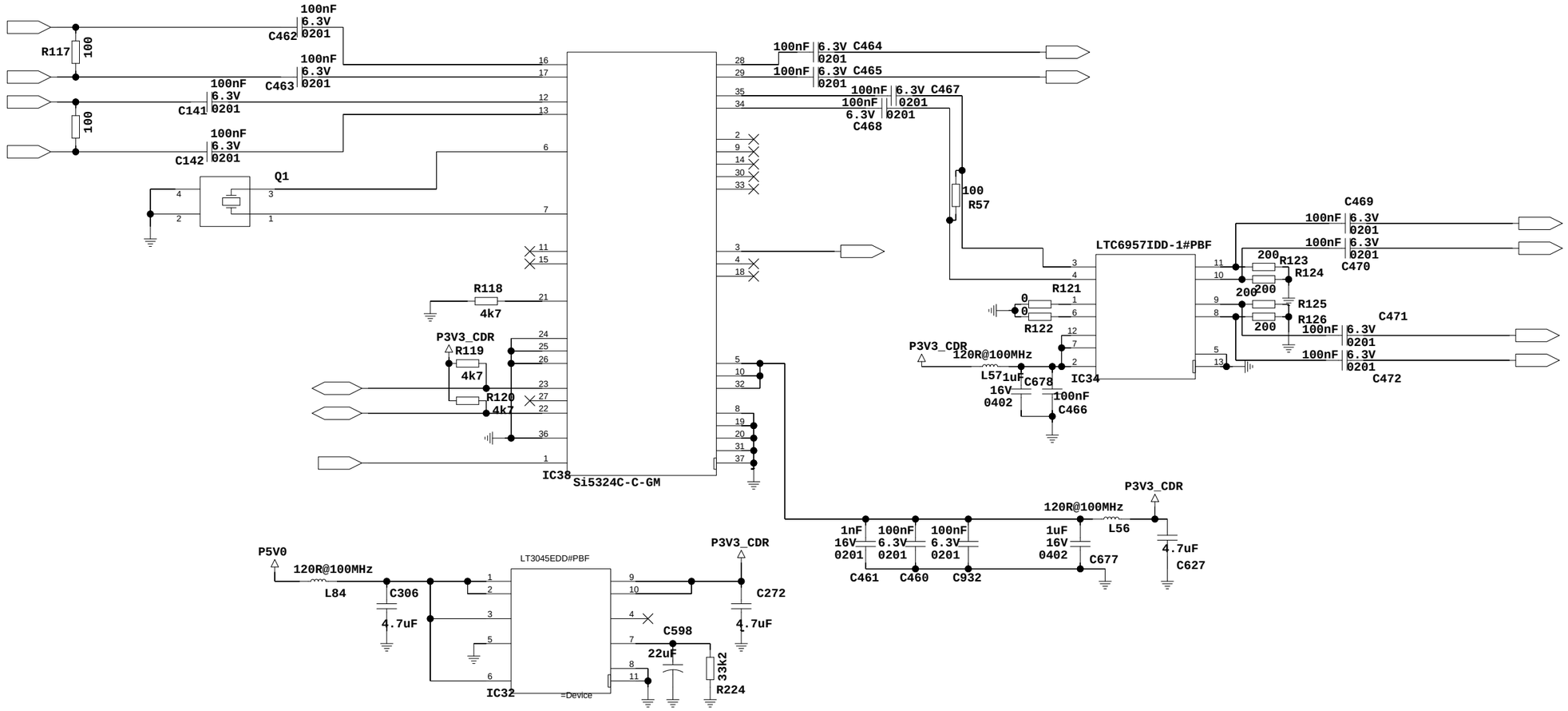


# ARTIQ Sinara

# SI5324_CLK_RECOVERY

| | | |
|---|---|---|
| | 1 | v0.95 |
| G.K. | 22 23 | 08/01/2017:17:21 |

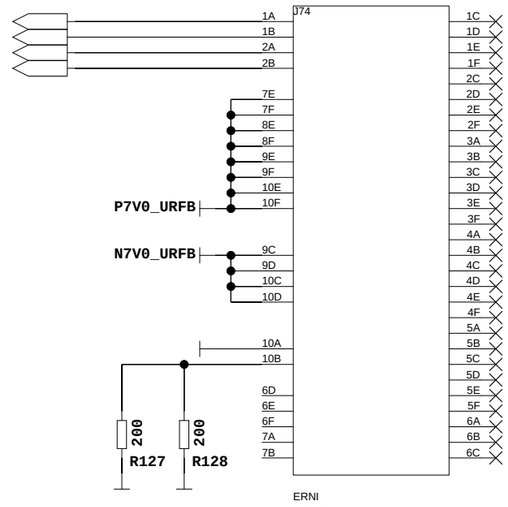


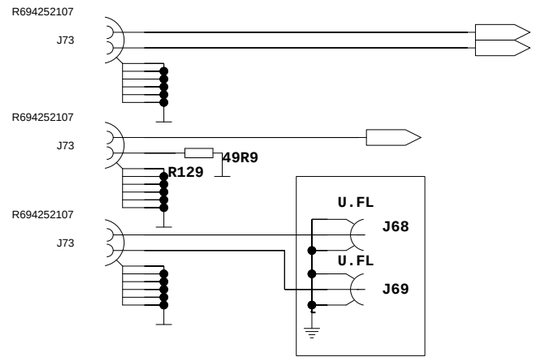


# uRFB_Connectors

## ARTIQ Sinara

| | | |
|---|---|---|
| | 1 | v0.95 |
| G.K. | 23 23 | 21/12/2016:23:49 |

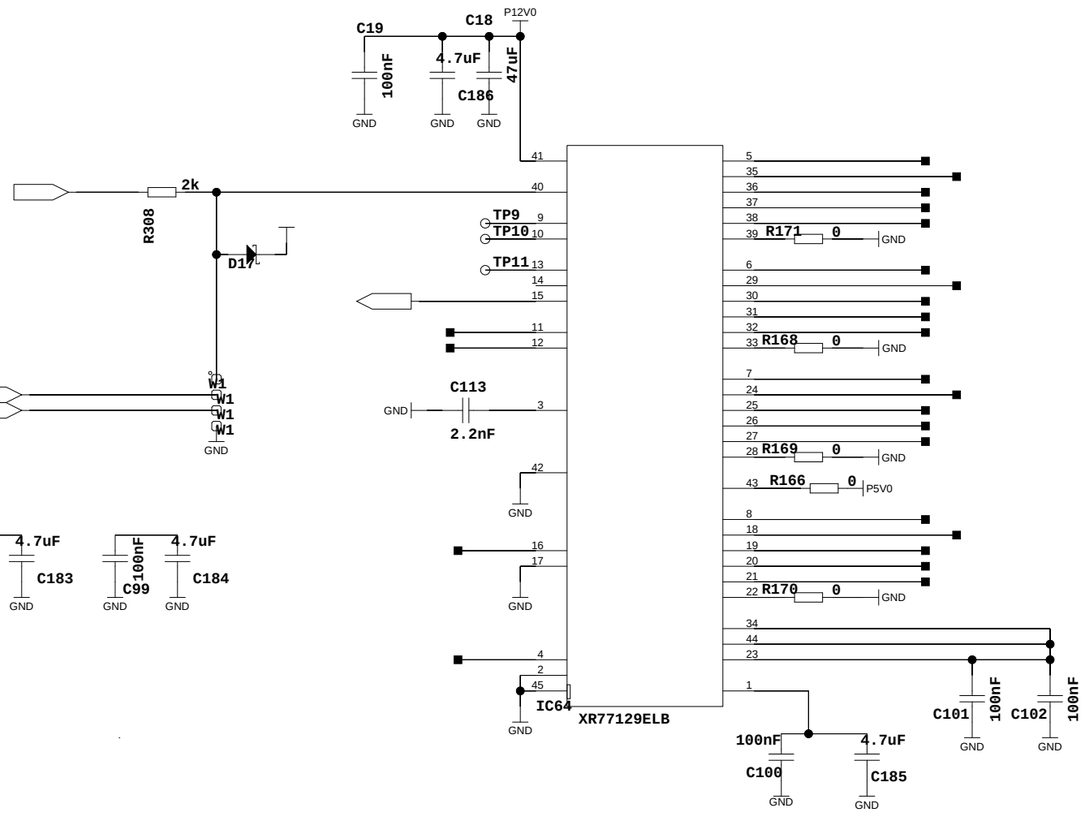


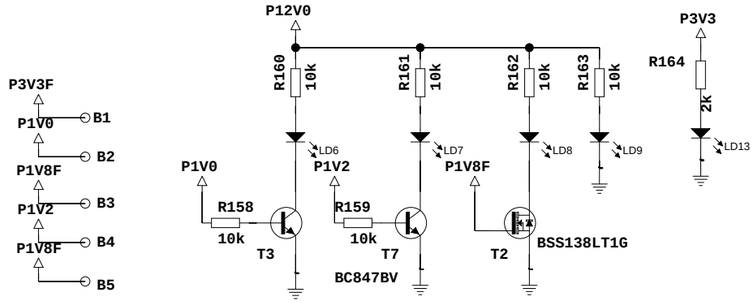


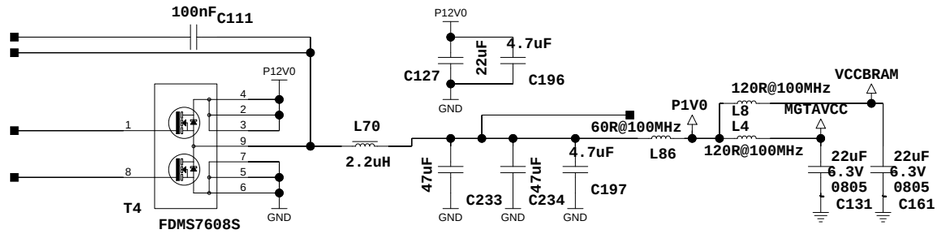


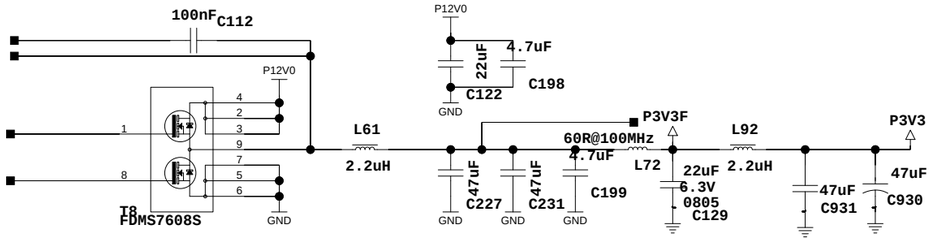


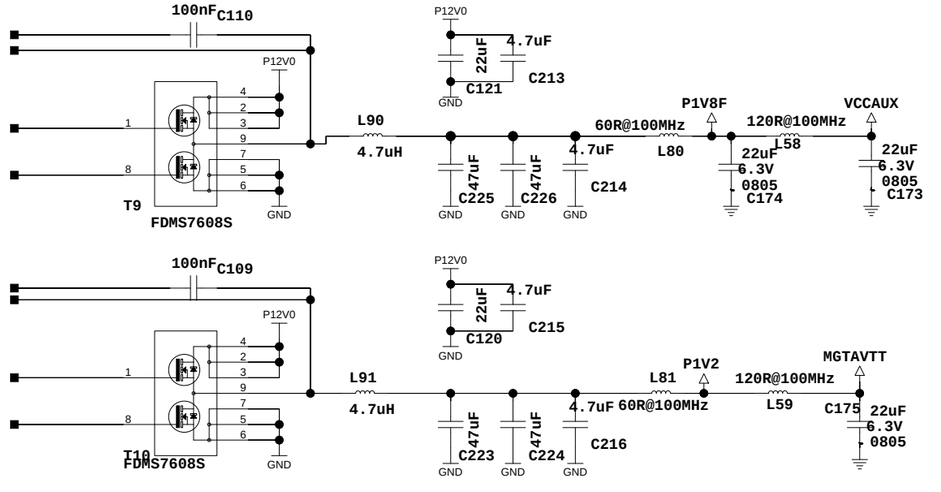


# ARTIQ Sinara

# PWR_buck_FPGA_SUPPLY

| | | |
|---|---|---|
| | 1 | v0.95 |
| G.K. | 1 | 24/12/2016:00:46 |