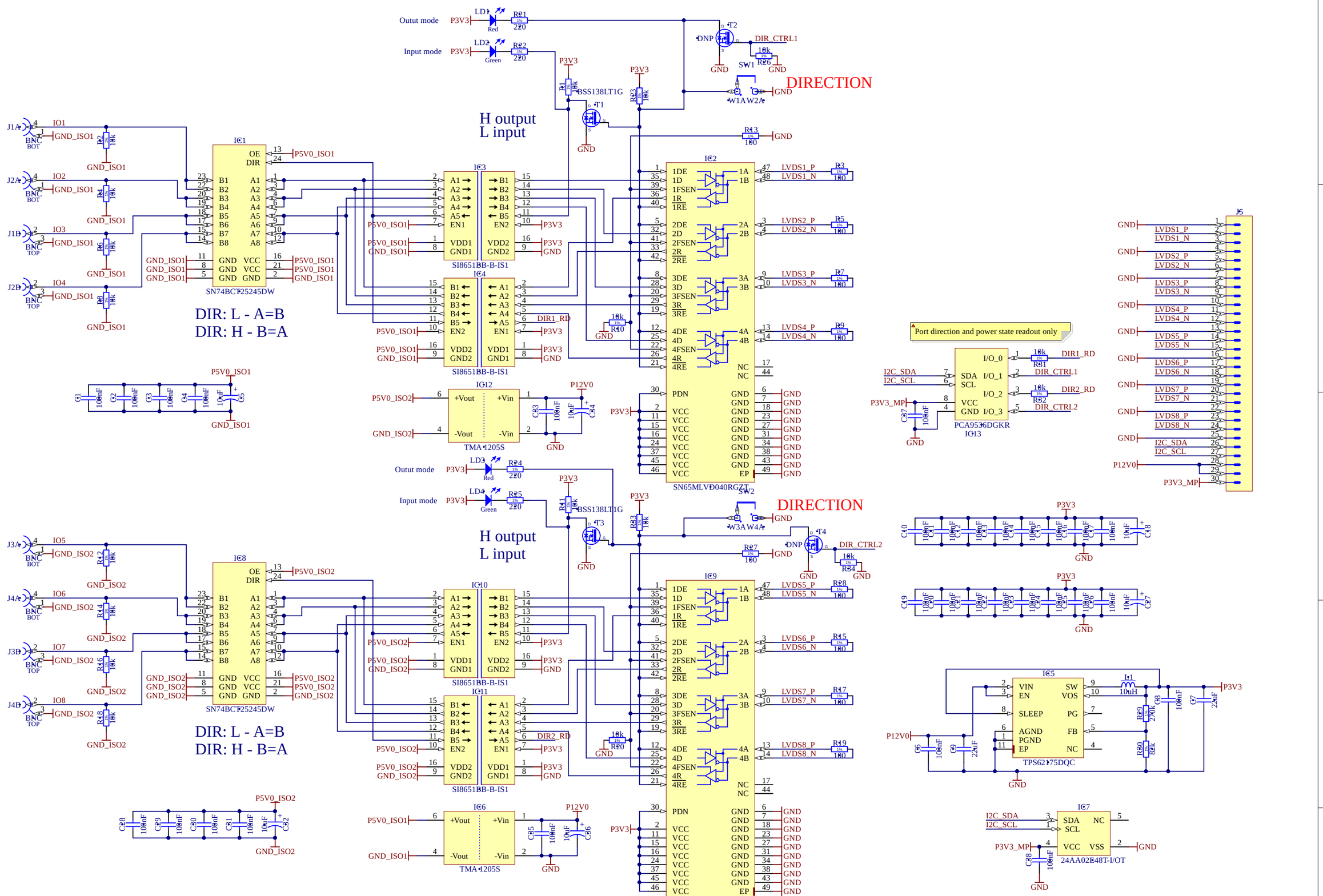
Outut mode
Input mode
H output
L input
DIRECTION
DIR: L - A=B
DIR: H - B=A
DIR: L - A=B
DIR: H - B=A
Port direction and power state readout only
SN74BCT25245DW
SI8651BB-B-IS1
TMA1205S
SN65MLVD040RGZT
PCA9536DGKR
TPS62175DQC
24AA02E48T-I/OT
ARTIQ
Warsaw Univeristy of Technology
Nowowiejska 15/19
ISE
Project/Equipment ADC/DAC MEZZANINE
Document
Title
Title2
Designer G.K.
Drawn by G.K.
Check.by -
Last Mod. -
File PCB_3U_BNC.schdoc
Print Date 17.12.2016 16:51:02
Sheet - of -
Size A3
Rev -

IC6
IC2
SW2
IC1
C34
L1
IC12
SW1
IC8
IC11
T3
C36
C35
J5
IC7

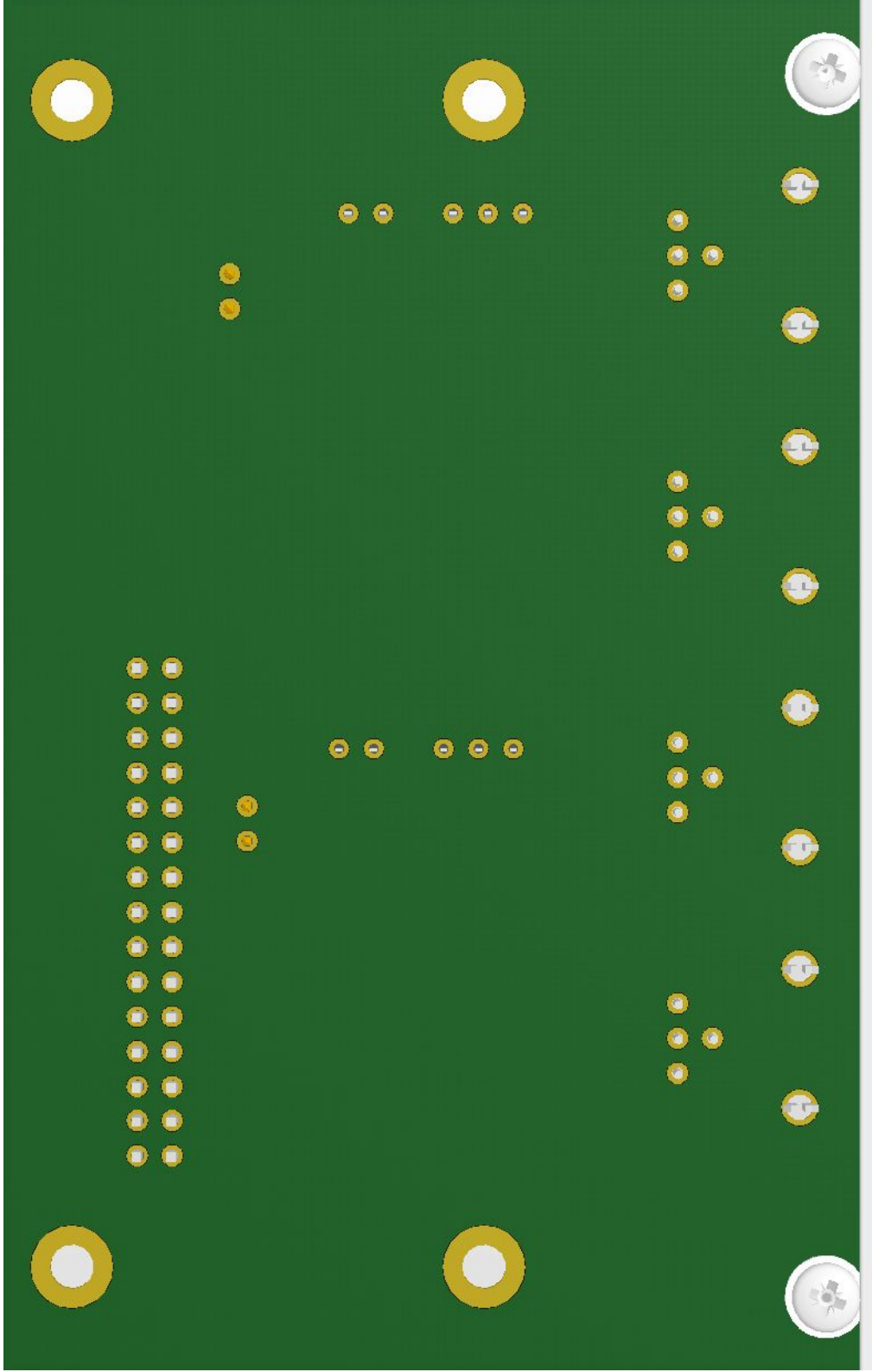

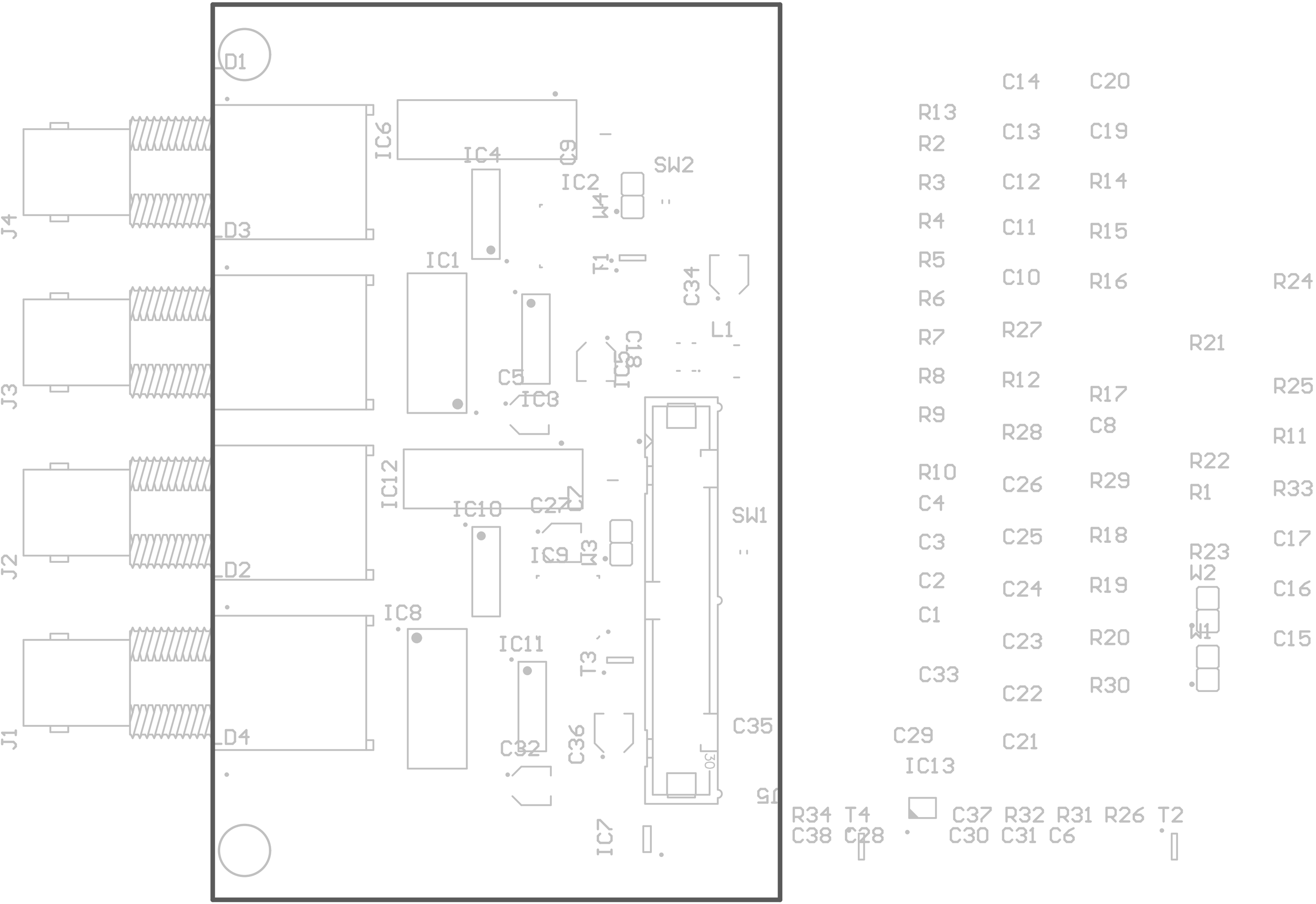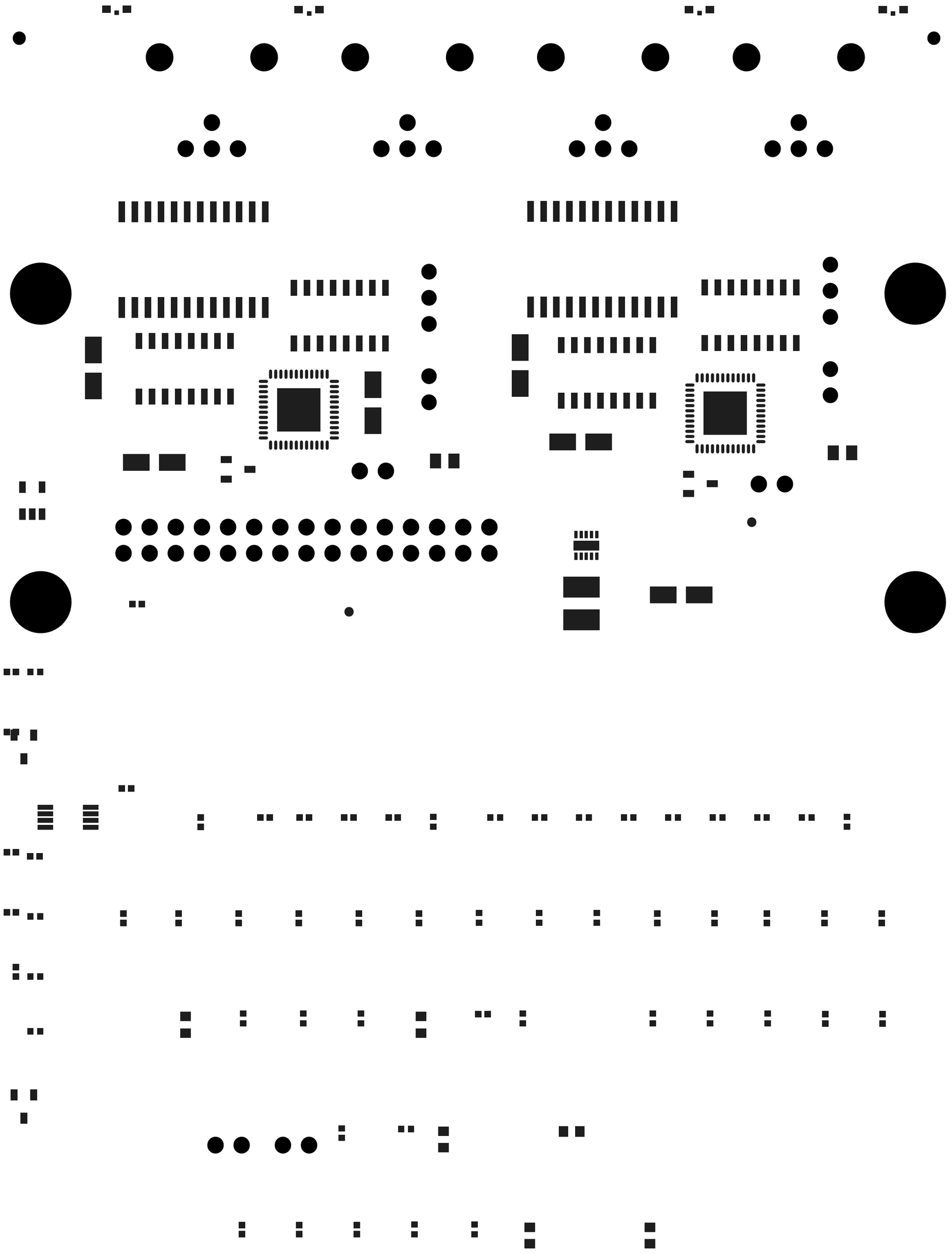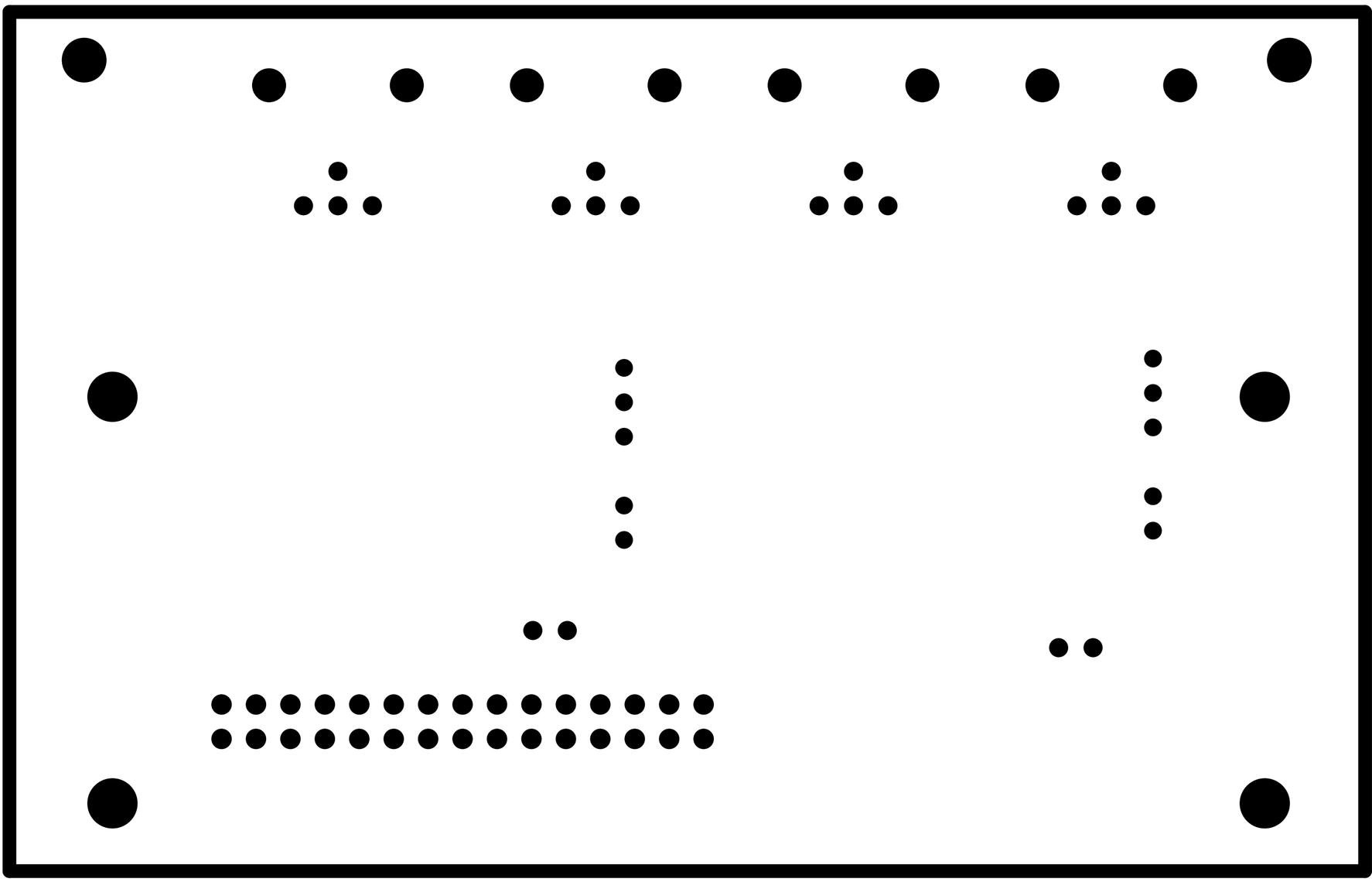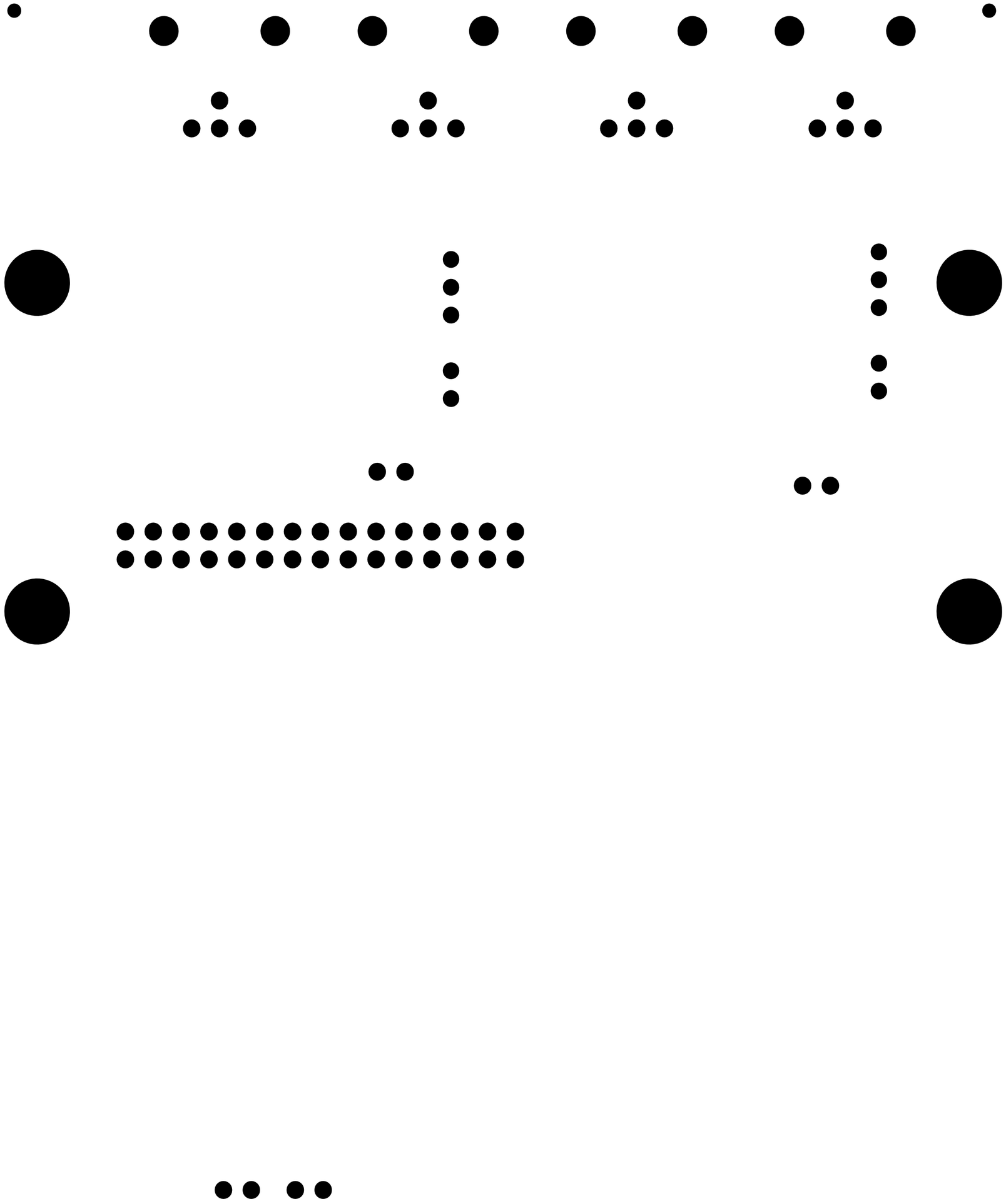
D1
IC6
IC4
C9
SW2
IC2
W4
D3
IC1
T1
C34
L1
C18
IC5
C5
IC3
J4
J3
IC12
IC10
C27
SW1
IC9
W3
D2
IC8
IC11
T3
J2
C35
C36
C32
D4
J1
J5
IC7
R13
R2
R3
R4
R5
R6
R7
R8
R9
R10
C4
C3
C2
C1
C33
C29
IC13
C14
C13
C12
C11
C10
R27
R12
R28
C26
C25
C24
C23
C22
C21
C20
C19
R14
R15
R16
R17
C8
R29
R18
R19
R20
R30
R21
R22
R1
R23
W2
W1
R24
R25
R11
R33
C17
C16
C15
R34
T4
C38
C28
C37
R32
R31
R26
T2
C30
C31
C6