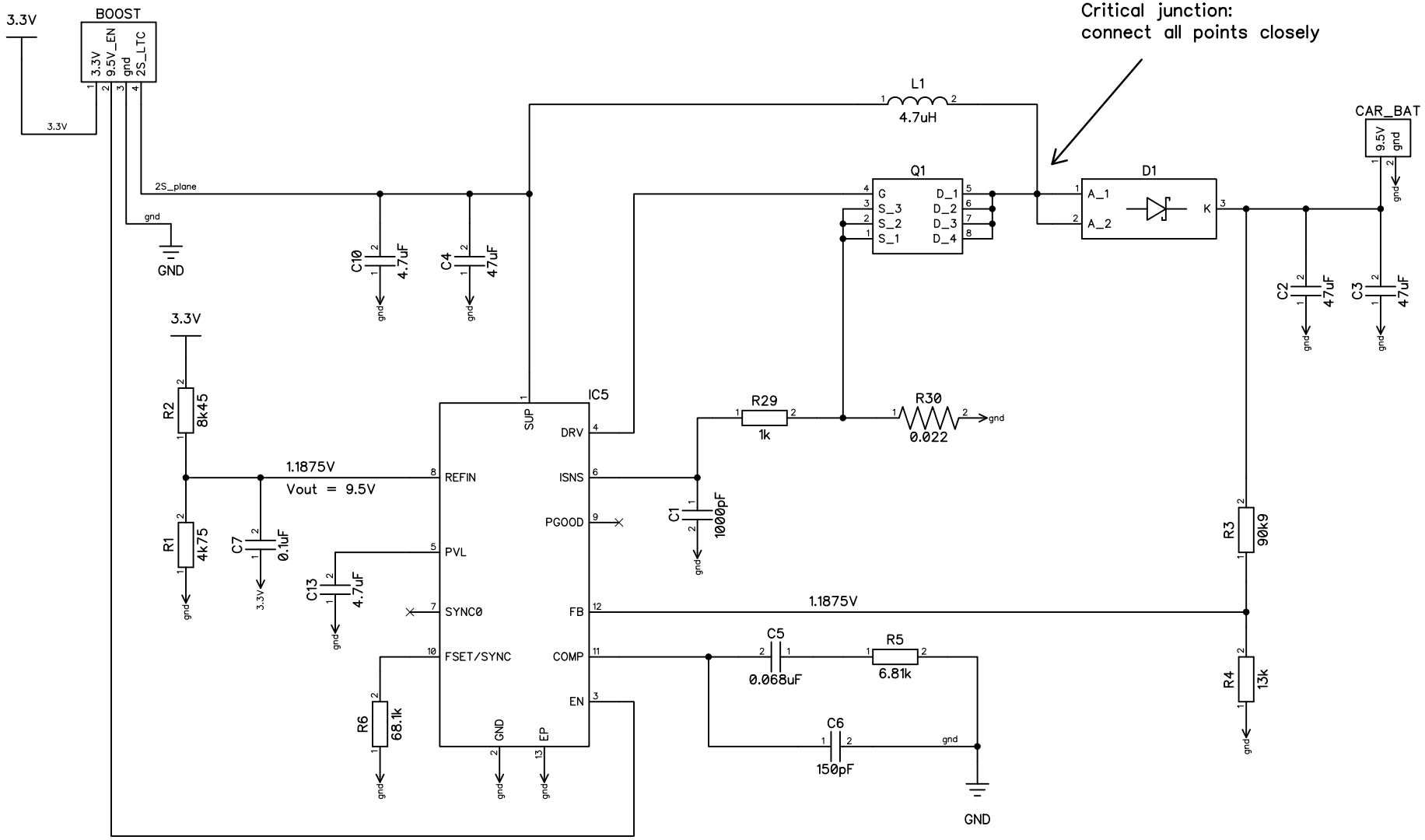

Rev_1	2S to 9.5V	2021	Ricardo	Barbosa