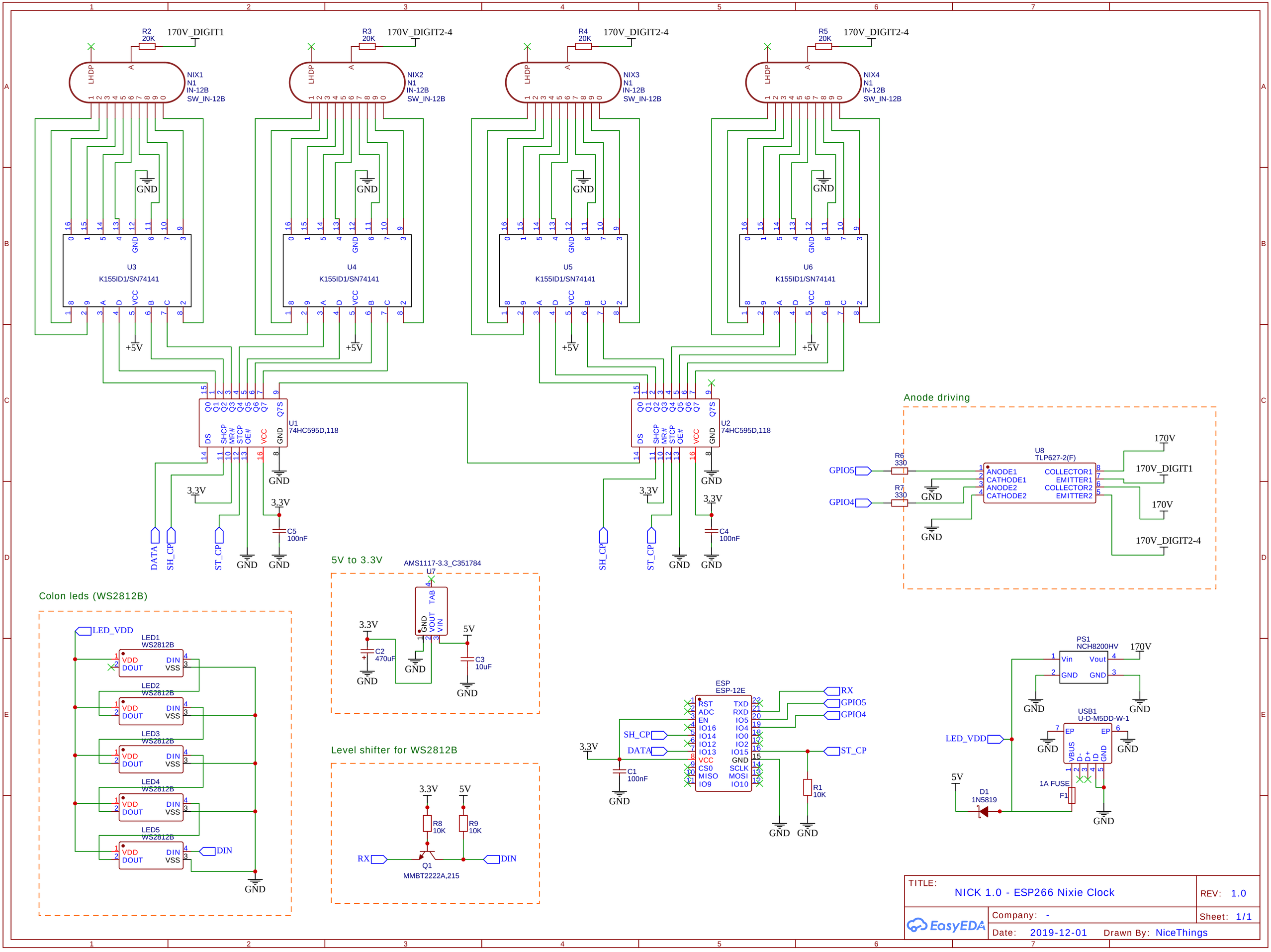

TITLE: NICK 1.0 - ESP266 Nixie Clock	REV: 1.0
EasyEDA	Company: -
	Sheet: 1/1
	Date: 2019-12-01 Drawn By: NiceThings