A Unified Framework for Psychometrics in Experimental Psychology: The Standardized Generalized Hierarchical Factor Model

Ricardo Rey-Sáez[1], Alicia Franco-Martínez[1], Javier Revuelta[2], and Miguel A. Vadillo[1]

[1]Department of Basic Psychology, Universidad Autónoma de Madrid

[2]Department of Social Psychology and Methodology, Universidad Autónoma de Madrid

Author Note

Ricardo Rey-Sáez https://orcid.org/0000-0001-6739-2035

Alicia Franco-Martínez https://orcid.org/0000-0002-9710-1240

Javier Revuelta https://orcid.org/0000-0003-4705-6282

Miguel A. Vadillo https://orcid.org/0000-0001-8421-816X

All data, models, and scripts required to reproduce the results of this work are publicly available at https://osf.io/5dutv/ and https://github.com/RicardoReySaez/GenHFM.

Correspondence concerning this article should be addressed to Ricardo Rey-Sáez, Department of Basic Psychology, Universidad Autónoma de Madrid, Ivan Pavlov Street, 6, Fuencarral-El Pardo, Madrid 28049, Spain, Email: ricardoreysaez95@gmail.com

SM1: Equivalence between Spearman correction for attenuation and frequentist hierarchical models

Previous work has suggested that hierarchical models provide more precise estimates of correlations between experimental effects than the traditional Spearman correction for attenuation (Mehrvarz & Rouder, 2025; Rouder et al., 2023). We show, however, that this apparent gain in precision is not due to the hierarchical structure per se, but rather to the use of Bayesian estimation, where prior distributions act as regularizers. Both Rouder et al. (2023) and Mehrvarz and Rouder (2025) model these matrices using an inverse-Wishart prior,

$$\mathbf{\Sigma}_\beta \sim \text{Inverse-Wishart}\left(\nu = J + 1,\ \mathbf{\Psi} = a^2 \cdot \mathbf{I}\right)$$

where ν and $\mathbf{\Psi}$ are the shape and scale parameters of the inverse Wishart distribution, J is the number of tasks, $\mathbf{I}$ is a $J \times J$ identity matrix and a^2 is described by the authors as "a prior setting that corresponds to the prior expected value of variance" (Mehrvarz & Rouder, 2025, p. 4). In their simulation study, the authors set $a^2 = 0.025^2$ as the prior variance parameter while generating the data using the same population variance value, $\sigma_\beta^2 = 0.025^2$. Consequently, the prior is intended to be centered on the true value used to generate the data in their simulation studies.

However, it is worth noting that a^2 does not correspond strictly to the expected value of the variance in this setting. For an inverse-Wishart prior in J dimensions, the mean $\mathbb{E}[\mathbf{\Sigma}]$ exists only if $\nu > J + 1$, and the element-wise variances exist only if $\nu > J + 3$. With the choice $\nu = J + 1$, neither the mean nor the variance are finite. Therefore, a^2 functions as a scale parameter, but its interpretation as a "prior expected variance" is technically imprecise given the selected degrees of freedom.

To better illustrate the influence of the parameter a, we simulated 50,000 samples from the inverse-Wishart distribution with $J = 2$ and $a^2 = 0.025^2$, and examined the resulting marginal distribution of the variance components (Figure 1). As shown, this prior assigns a large

proportion of its probability mass to values very close to zero, while remaining extremely diffuse for larger variances. Approximately 61% of the simulated values fall below a^2, whereas the remaining 39% are spread between 0.025^2 and infinity. Overall, this prior tends to regularize variance estimates toward zero.

Figure 1

Sampling distribution of variance values drawn from the inverse-Wishart prior

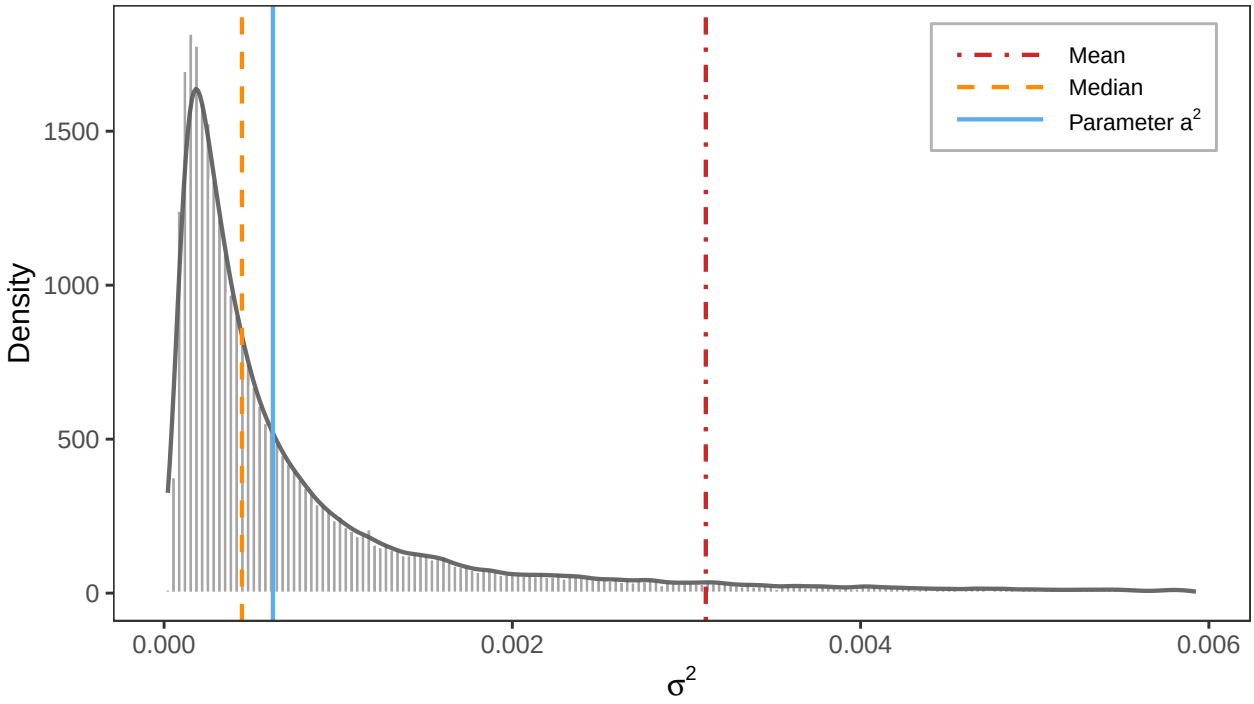

Although this inverse-Wishart prior is uniform over the space of correlations, its regularization on the variances affects the posterior distribution of the correlations. To illustrate this point, we replicated the simulation reported by Rouder et al. (2023) for estimating the correlation between two tasks, using their original `R` code. The only modification we introduced was to vary the true population correlation between tasks from .1 to .9 in increments of .1. For each value of the true correlation, we simulated 1,000 datasets and estimated the correlation using three methods: the Spearman correction for attenuation, a frequentist hierarchical model, and the Bayesian hierarchical model implementing the exact inverse-Wishart prior parametrization used by Rouder et al. (2023) and Mehrvarz and Rouder (2025). Given that the frequentist hierarchical model relies solely on the likelihood without incorporating prior distributions, this comparison

serves to isolate the shrinkage effect introduced specifically by the inverse-Wishart prior.

Figure 2

Sampling distribution of correlation estimates with the Spearman correction for attenuation, frequentist and Bayesian hierarchical model (HM)

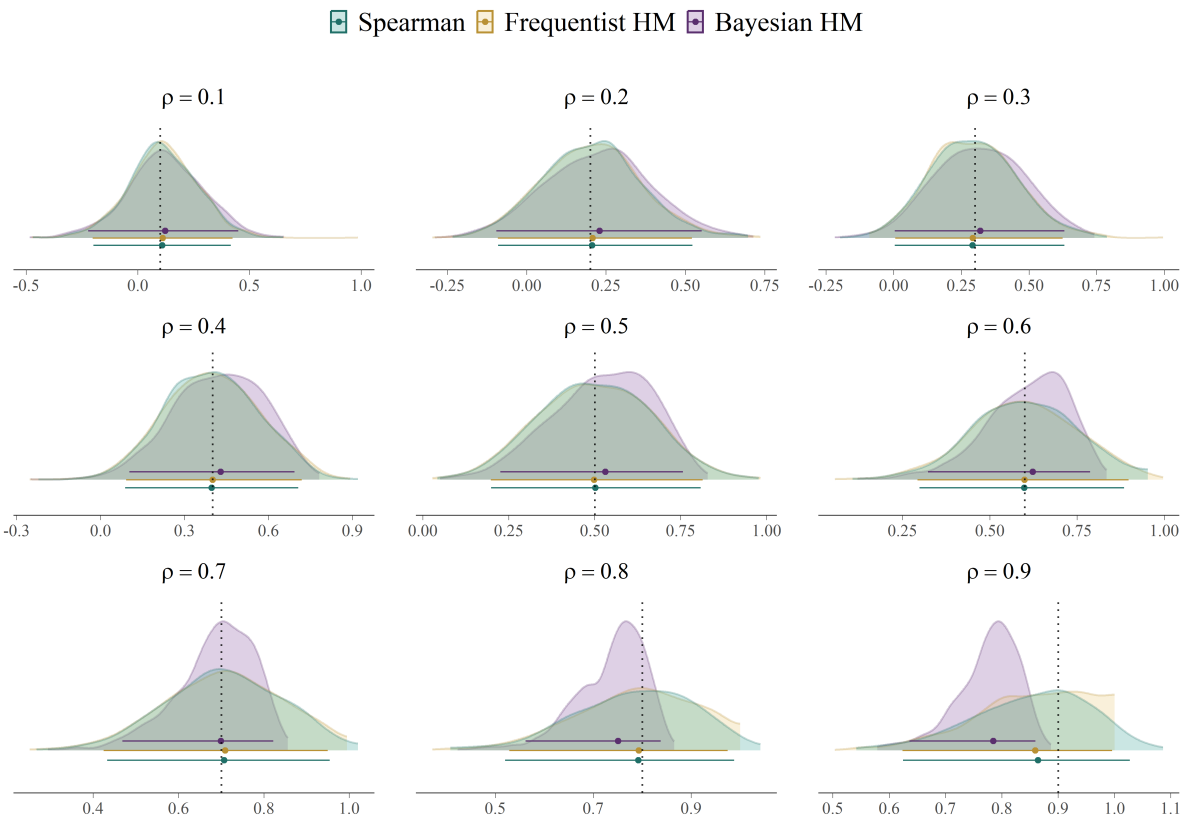

Figure 2 shows the sampling distributions of the 1,000 correlation estimates obtained with each method (posterior means for the Bayesian model). Across all values of the true correlation, Spearman's correction for attenuation and the frequentist hierarchical model yield nearly identical estimates. In contrast, the Bayesian hierarchical model appears increasingly precise as the true correlation grows. Table 1 summarizes the standard deviations of these sampling distributions: while Spearman's correction and the frequentist model produce almost identical variability, the Bayesian model shows larger dispersion when ρ is low and smaller dispersion when ρ is high. However, at high true correlations ($\rho = .8$ and $\rho = .9$), this apparent gain in precision reflects overconfidence rather than accuracy, and the posterior means become systematically biased away

from the true value. Only around $\rho = .3$ or $\rho = .4$ do the three methods display comparable uncertainty and accuracy.

Table 1

Sampling standard deviation of the distribution of correlation estimates

Method	$\rho = 0.1$	$\rho = 0.2$	$\rho = 0.3$	$\rho = 0.4$	$\rho = 0.5$	$\rho = 0.6$	$\rho = 0.7$	$\rho = 0.8$	$\rho = 0.9$
Spearman	0.155	0.155	0.158	0.164	0.158	0.154	0.141	0.121	0.098
Frequentist HM	0.159	0.158	0.166	0.166	0.160	0.154	0.140	0.119	0.097
Bayesian HM	0.171	0.166	0.165	0.162	0.143	0.125	0.097	0.074	0.054

Overall, the practical equivalence between Spearman's correction and the frequentist hierarchical model, together with their divergence from the Bayesian hierarchical model, indicates that the added precision is a consequence of the prior specification, not of the hierarchical structure itself.

SM2: Expected Values and Variances of Zero-Truncated Normal Distributions

To ensure positive values, the parameters σ and τ were modeled as zero-truncated normal distributions. Let $\alpha = (a - \mu_X)/\sigma_X$, with $a = 0$ denoting the lower truncation limit. For a truncated normal variable X, the expected value and variance are (Greene, 2011, p. 836):

$$\mathbb{E}[X] = \mu_X + \sigma_X \cdot \lambda(\alpha) \quad \text{and} \quad \mathbb{V}[X] = \sigma^2 \cdot [1 - \delta(\alpha)] \tag{1}$$

where μ_X and σ_X^2 denote the mean and variance of the untruncated normal distribution, respectively, and

$$\lambda(\alpha) = \frac{\phi(\alpha)}{1 - \Phi(\alpha)}, \qquad \delta(\alpha) = \lambda(\alpha) \cdot [\lambda(\alpha) - \alpha], \tag{2}$$

with $\phi(\cdot)$ and $\Phi(\cdot)$ being the standard normal probability density and cumulative distribution functions, respectively.

To optimize sampling in *Stan*, we adopted a two-step procedure to define the truncated distribution. First, the variable Z was defined as a standardized normal variable truncated at zero. In this case, $\mu_Z = 0$ and $\sigma_Z = 1$, $\alpha = 0/1 = 0$, so the standardized truncation point is $\alpha = (0 - 0)/1 = 0$. Consequently,

$$\lambda(0) = \frac{\phi(0)}{1 - \Phi(0)}, \tag{3}$$

where $\phi(0)$ and $\Phi(0)$ denote the standard normal density and cumulative distribution evaluated at zero whose values are $1/\sqrt{2 \cdot \pi}$ and $1/2$, respectively. Substituting these values yields $\lambda(0) = \sqrt{2/\pi}$, and therefore the expected value and variance of the standardized truncated normal distribution are

$$\mathbb{E}[Z] = \sqrt{\frac{2}{\pi}} \quad \text{and} \quad \mathbb{V}[Z] = 1 - \frac{2}{\pi}. \tag{4}$$

Next, we defined the variable $Y = \text{shift} + \text{scale} \cdot Z$ where *shift* and *scale* are positive-valued parameters. The expected value and variance of Y can then be obtained by a change of variable:

$$\mathbb{E}[Y] = \text{shift} + \text{scale} \cdot \mathbb{E}[Z], \qquad \mathbb{V}[Y] = \text{scale}^2 \cdot \mathbb{V}[Z] \tag{5}$$

The main limitation of this approximation is that it does not provide direct access to the mean and variance of the corresponding untruncated normal distribution. To recover these quantities, it is necessary to establish the equivalence between *shift* and *scale* and the parameters μ_X and σ_X^2 of the untruncated distribution.

From μ_X and σ_X to *shift* and *scale*

Starting from known values of μ_X and σ_X, *shift* and *scale* can be obtained analytically. First, by equating the variances of Y and X and solving for *scale*:

$$\begin{aligned}
\mathbb{V}[Y] &= \mathbb{V}[X] \\
\text{scale}^2 \cdot \mathbb{V}[Z] &= \sigma_X^2 \cdot [1 - \delta(\alpha)] \\
\text{scale}^2 \cdot \left[1 - \frac{2}{\pi}\right] &= \sigma_X^2 \cdot [1 - \delta(\alpha)] \\
\text{scale}^2 &= \frac{\sigma_X^2 \cdot [1 - \delta(\alpha)]}{\left[1 - \frac{2}{\pi}\right]} \\
\text{scale} &= \sigma_X \cdot \sqrt{\frac{1 - \delta(\alpha)}{\left[1 - \frac{2}{\pi}\right]}}
\end{aligned} \tag{6}$$

Once *scale* is known, *shift* can be obtained from the equality of expected values:

$$\begin{aligned}
\mathbb{E}[Y] &= \mathbb{E}[X] \\
\text{shift} + \text{scale} \cdot \mathbb{E}[Z] &= \mu_X + \sigma_X \cdot \lambda(\alpha) \\
\text{shift} + \text{scale} \cdot \sqrt{\frac{2}{\pi}} &= \mu_X + \sigma_X \cdot \lambda(\alpha) \\
\text{shift} &= \mu_X + \sigma_X \cdot \lambda(\alpha) - \text{scale} \cdot \sqrt{\frac{2}{\pi}}
\end{aligned} \tag{7}$$

Although these expressions allow computing *shift* and *scale* given μ_X and σ_X, the inverse transformation (i.e., recovering μ_X and σ_X from *shift* and *scale*) has no closed-form solution and must be solved numerically. This is because the parameters are linked through the standardized

truncation point, α, which simultaneously depends on both μ_X and σ_X. Moreover, the functions $\lambda(\alpha)$ and $\delta(\alpha)$ involve the standard normal cumulative distribution, $\Phi(\alpha)$, whose inverse has no analytic expression.

From *shift* and *scale* to μ_X and σ_X

We reparameterized the truncated normal formulation in terms of α and σ_X. Since $\alpha = (a - \mu_X)/\sigma_X$ and $a = 0$, it follows that $\mu_X = -\alpha \cdot \sigma_X$. Using Equation 6, we can solve for σ_X^2:

$$\begin{aligned} \text{scale}^2 &= \frac{\sigma_X^2 \cdot [1 - \delta(\alpha)]}{\left[1 - \frac{2}{\pi}\right]} \\ \frac{\text{scale}^2 \cdot \left[1 - \frac{2}{\pi}\right]}{1 - \delta(\alpha)} &= \sigma_X^2 \end{aligned} \tag{8}$$

Next, from Equation 7, we can solve for σ_X:

$$\begin{aligned} \text{shift} + \text{scale} \cdot \sqrt{\frac{2}{\pi}} &= \mu_X + \sigma_X \cdot \lambda(\alpha) \\ \text{shift} + \text{scale} \cdot \sqrt{\frac{2}{\pi}} &= -\alpha \cdot \sigma_X + \sigma_X \cdot \lambda(\alpha) \\ \text{shift} + \text{scale} \cdot \sqrt{\frac{2}{\pi}} &= \sigma_X \cdot [\lambda(\alpha) - \alpha] \\ \frac{\text{shift} + \text{scale} \cdot \sqrt{\frac{2}{\pi}}}{\lambda(\alpha) - \alpha} &= \sigma_X \end{aligned} \tag{9}$$

We can now square Equation 9 and set it equal to Equation 8, leaving α as the only unknown parameter:

$$\left(\frac{\text{shift} + \text{scale} \cdot \sqrt{\frac{2}{\pi}}}{\lambda(\alpha) - \alpha}\right)^2 = \frac{\text{scale}^2 \cdot \left[1 - \frac{2}{\pi}\right]}{1 - \delta(\alpha)} \tag{10}$$

Rearranging, we define the target function $f(\alpha)$:

$$f(\alpha) = \left(\frac{\text{shift} + \text{scale} \cdot \sqrt{\frac{2}{\pi}}}{\lambda(\alpha) - \alpha}\right)^2 - \frac{\text{scale}^2 \cdot \left[1 - \frac{2}{\pi}\right]}{1 - \delta(\alpha)} = 0 \tag{11}$$

The goal is to identify the value of α that satisfies $f(\alpha) = 0$, which can be done numerically using standard root-finding or standard optimization methods. Once α is estimated, σ_X^2 can be obtained from either Equation 8 or Equation 9, and μ_X follows directly as $\mu_X = -\alpha \cdot \sigma_X$. The R code below implements the function $f(\alpha)$ using a least-squares approach. For demonstration, the example sets shift = 0.2 and scale = 0.3, although in practice these would be replaced by the values of interest.

```
# Shift and scale fixed values
shift <- .2; scale <- .3

# Lambda and delta functions
lambda <- function(alpha) dnorm(alpha) / (1 - pnorm(alpha))
delta  <- function(alpha) lambda(alpha) * (lambda(alpha) - alpha)

# Least-squares objective f(alpha) function
f_alpha <- function(alpha, shift, scale){
  # Variance from Eq. (9)
  S2X_eq1 <- ((shift + scale * sqrt(2/pi)) / (lambda(alpha) - alpha))^2
  # Variance from Eq. (8)
  S2X_eq2 <- (scale^2 * (1 - 2/pi)) / (1 - delta(alpha))
  # Squared difference between variance estimates
  (S2X_eq1 - S2X_eq2)^2
}

# Minimize f(alpha) function to estimate alpha
fit_LS <- optim(par = 0, fn = f_alpha, shift = shift, scale = scale,
                method = "BFGS")

# Store the estimated alpha value that minimizes the squared differences
alpha_LS <- fit_LS$par

# Recover mu and sigma parameters from alpha
sigma_LS <- (shift + scale * sqrt(2/pi)) / (lambda(alpha_LS) - alpha_LS)
mu_LS <- -alpha_LS * sigma_LS
```

SM3: Expected Values for σ^2 and τ^2

As noted in the main text, reliability calculations depend on μ_{σ^2} for the shifted-lognormal model and on μ_{σ^2} and μ_{τ^2} for the ex-Gaussian model. Here, to maintain consistency with the notation introduced in the previous subsection, we denote these quantities as $\mathbb{E}\left[\sigma^2\right]$ and $\mathbb{E}\left[\tau^2\right]$. These expectations, however, are not directly available and cannot be computed simply as $(\mathbb{E}[\sigma])^2$ or $(\mathbb{E}[\tau])^2$. The key point is that the square of the mean is not equivalent to the mean of the squared quantities. In other words, squaring the average of the standard deviation parameters is not the same as averaging the squared values of these standard deviations (i.e., the mean of a distribution of variances).

This distinction arises because the squaring function ($x \mapsto x^2$) is convex, and according to Jensen's inequality, $\mathbb{E}\left[x^2\right] \geq (\mathbb{E}\left[x\right])^2$. As a result, using squared means would systematically underestimate the true expected variances $\mathbb{E}\left[\sigma^2\right]$ and $\mathbb{E}\left[\tau^2\right]$. When applied to reliability calculations, this underestimation of variance leads to inflated reliability estimates.

This quadratic expectation can be obtained directly from the basic definition of the variance of a random variable, $\mathbb{V}\left[X\right] = \mathbb{E}[X^2] - (\mathbb{E}[X])^2$, so that $\mathbb{E}[X^2]$ can be expressed as $\mathbb{E}[X^2] = (\mathbb{E}[X])^2 + \mathbb{V}\left[X\right]$.

We simply apply this relation to derive the expected quadratic terms $\mathbb{E}[\sigma^2]$ and $\mathbb{E}[\tau^2]$ from the means and variances of their corresponding truncated normal distributions. Substituting the expressions from Equation 5 for $\mathbb{E}[X]$ and $\mathbb{V}[X]$, the expected square becomes

$$\begin{aligned}\mathbb{E}[X^2] &= (\text{shift} + \text{scale} \cdot \mathbb{E}\left[Z\right])^2 + \text{scale}^2 \cdot \mathbb{V}\left[Z\right] \\ &= \left(\text{shift} + \text{scale} \cdot \sqrt{\frac{2}{\pi}}\right)^2 + \text{scale}^2 \cdot \left[1 - \frac{2}{\pi}\right]\end{aligned} \tag{12}$$

This expression provides a closed-form solution for $\mathbb{E}[X^2]$ in terms of the *shift* and *scale* parameters of the truncated normal distribution, which can then be directly used to compute $\mathbb{E}[\sigma^2]$ and $\mathbb{E}[\tau^2]$ for the shifted-lognormal and ex-Gaussian models, respectively.

However, no closed-form solution exists for the expected value $\mathbb{E}\left[1/\text{rate}^2\right]$ in the

ex-Gaussian model parameterized with the exponential rate parameter. To compute reliability, we can approximate $\mathbb{E}[\tau^2]$ using an inner Monte Carlo step. For each task j and posterior draw s, the expectation $\mathbb{E}[\tau^2]$ can be approximated as

$$\mathbb{E}[\tau_j^2]^{(s)} = \frac{1}{B}\sum_{b=1}^{B} \frac{1}{\left(\text{shift}_j^{(s)} + \text{scale}_j^{(s)} \cdot Z_b\right)^2}, \qquad Z_b \sim \text{Normal}^+(0,1)\,, \tag{13}$$

that is, the average of $1/rate^2$ evaluated at B samples from the truncated standard normal distribution.

SM4: Rotational indeterminancy and identification

In exploratory factor models, the population covariance matrix is defined as $\mathbf{\Sigma} = \mathbf{\Lambda} \cdot \mathbf{\Lambda}' + \mathbf{\Psi}$. A critical consequence of this definition is that the likelihood is evaluated in terms of $\mathbf{\Sigma}$, not the particular configuration of factor loadings $\mathbf{\Lambda}$ that produces it. Therefore, infinitely many combinations of $\mathbf{\Lambda}$ (via rotation, column permutation, or sign flipping) can yield the exact same covariance matrix.

In Bayesian estimation, this indeterminacy implies that the likelihood surface is multimodal. The MCMC sampler explores these equally valid but differently rotated solutions, exhibiting random sign flips and changing factor orders across iterations. Consequently, standard posterior summaries are meaningless; for example, averaging loadings across unaligned draws causes the means to converge to zero due to symmetry.

To address this, we avoided imposing hard constraints during estimation (e.g., fixing zeros), which can bias the factor structure (Anderson & Rubin, 1956; Carvalho et al., 2008; Papastamoulis & Ntzoufras, 2022). Instead, we employed a *post hoc* strategy using the *MatchAlign* algorithm (Poworoznek et al., 2024). This method allows the sampler to explore the posterior freely and aligns the samples after estimation in three steps: (1) Each posterior draw is orthogonally rotated (using Varimax) to anchor the orientation; (2) a representative draw (pivot) is selected based on the median leading (largest) eigenvalue; finally, (3) all other draws are aligned to the pivot via signed permutations to resolve label switching and sign ambiguity.

For unidimensional and confirmatory models, rotational indeterminacy is resolved by design (due to the single column or fixed zero constraints). However, sign indeterminacy remains. To resolve this, we followed the strategy implemented in `blavaan` (Merkle et al., 2021): after estimation, we constrained one anchor loading per factor to be strictly positive, flipping the signs of the corresponding factor column (and associated correlations) in any draw where the anchor was negative.

SM5: Scaled-Beta probability density function

Let $X \sim \text{Beta}\,(\alpha,\ \beta)$ defined on the interval (0,1). The probability density function of X is

$$f_X(x) = \frac{1}{\mathrm{B}(\alpha,\beta)}\, x^{\alpha-1} \cdot (1-x)^{\beta-1}, \qquad \alpha > 0,\ \beta > 0,$$

where $\mathrm{B}(\alpha,\beta)$ is the Beta function,

$$\mathrm{B}(\alpha,\beta) = \frac{\Gamma(\alpha)\cdot\Gamma(\beta)}{\Gamma(\alpha+\beta)}.$$

We can re-scale this distribution to the interval (-1,1) applying the transformation $Y = 2 \cdot X - 1$. The Jacobian of this transformation is $\left|\frac{dX}{dY}\right| = \frac{1}{2}$. By change of variables, the density of Y becomes

$$\begin{aligned} f_Y(y) &= f_X\left(\tfrac{y+1}{2}\right) \cdot \left|\tfrac{dX}{dY}\right| \\ &= \frac{1}{\mathrm{B}(\alpha,\beta)} \cdot \left(\frac{y+1}{2}\right)^{\alpha-1} \cdot \left(1 - \frac{y+1}{2}\right)^{\beta-1} \cdot \frac{1}{2} \\ &= \frac{2^{-(\alpha+\beta-1)}}{\mathrm{B}(\alpha,\beta)} \cdot (1+y)^{\alpha-1} \cdot (1-y)^{\beta-1}, \qquad y \in (-1,1), \end{aligned}$$

and the log-density is given by:

$$\log f_Y(y) = (\alpha-1)\cdot\log(1+y) + (\beta-1)\cdot\log(1-y) -$$

$$(\alpha+\beta-1)\cdot\log(2) - \log\mathrm{B}\,(\alpha,\beta)$$

SM6: Bayesian hierarchical model specifications

Gaussian hierarchial model

Figure 3
Gaussian hierarchical model diagram

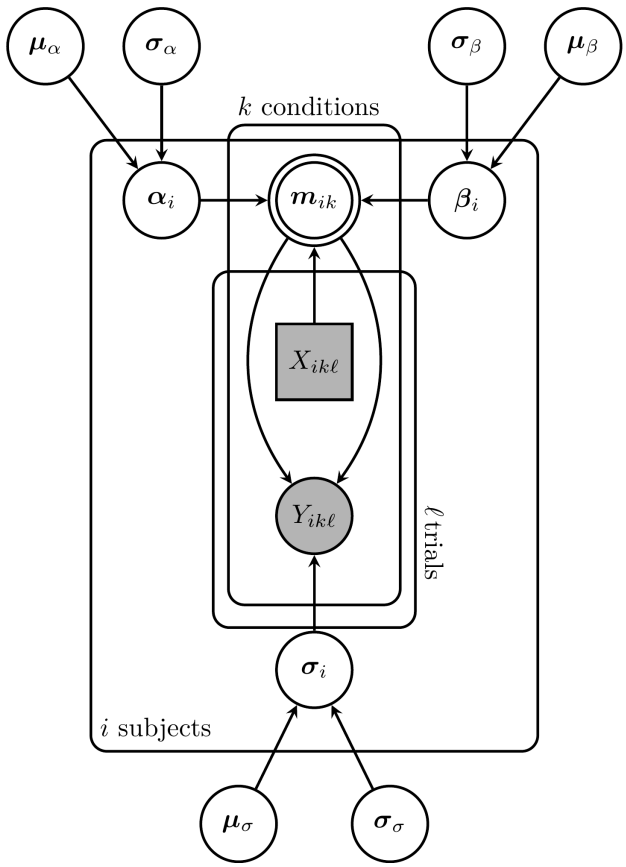

$$
\begin{aligned}
\mu_\alpha &\sim \text{Normal}^+\,(\mu = 0,\, \sigma = 10) \\
\mu_\beta &\sim \text{Normal}\,(\mu = 0,\, \sigma = 10) \\
\mu_\sigma &\sim \text{Normal}^+\,(\mu = 0,\, \sigma = 10) \\
\sigma_\alpha &\sim \text{Inverse-Gamma}\,(\alpha = 0.5,\, \beta = 0.5) \\
\sigma_\beta &\sim \text{Inverse-Gamma}\,(\alpha = 0.5,\, \beta = 0.5) \\
\sigma_\sigma &\sim \text{Inverse-Gamma}\,(\alpha = 0.5,\, \beta = 0.5) \\
\boldsymbol{\alpha}_i &\sim \text{Normal}\,(\mu = \mu_\alpha,\, \sigma = \sigma_\alpha) \\
\boldsymbol{\beta}_i &\sim \text{Normal}\,(\mu = \mu_\beta,\, \sigma = \sigma_\beta) \\
\boldsymbol{\sigma}_i &\sim \text{Normal}^+\,(\mu = \mu_\sigma,\, \sigma = \sigma_\sigma) \\
\boldsymbol{m}_{ik} &= \begin{cases} \boldsymbol{\alpha}_i - \frac{1}{2} \cdot \boldsymbol{\beta}_i & \text{if } X_{ik\ell} = 1 \\ \boldsymbol{\alpha}_i + \frac{1}{2} \cdot \boldsymbol{\beta}_i & \text{if } X_{ik\ell} = 2 \end{cases} \\
Y_{ik\ell} &\sim \text{Normal}\,(\mu = \boldsymbol{m}_{ik},\, \sigma = \boldsymbol{\sigma}_i)
\end{aligned}
$$

Ex-Gaussian hierarchial model (τ parameterization)

Figure 4

Ex-Gaussian hierarchical model diagram: τ parameterization

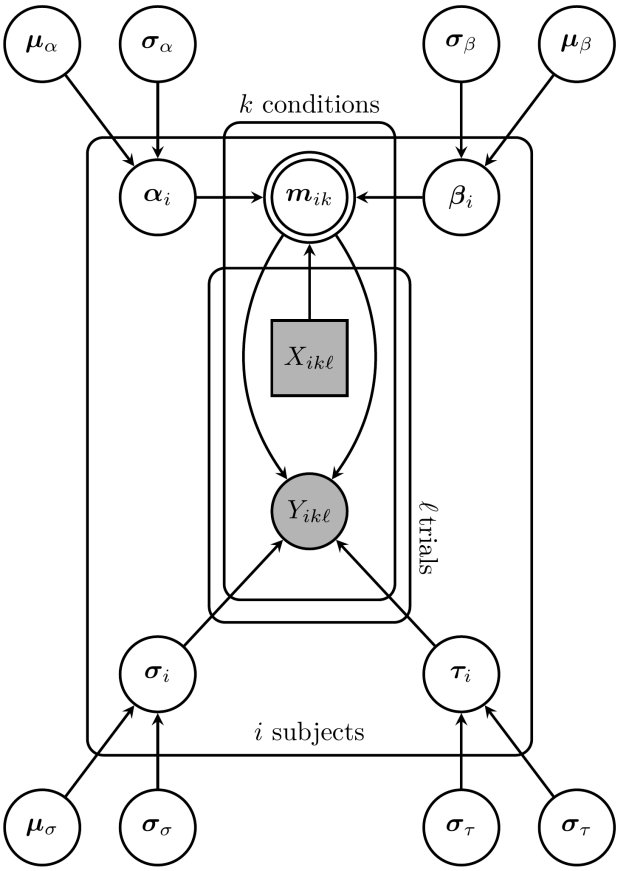

$$
\begin{aligned}
\mu_\alpha &\sim \text{Normal}^+\,(\mu = 0,\, \sigma = 10) \\
\mu_\beta &\sim \text{Normal}\,(\mu = 0,\, \sigma = 10) \\
\mu_\sigma &\sim \text{Normal}^+\,(\mu = 0,\, \sigma = 10) \\
\mu_\tau &\sim \text{Normal}^+\,(\mu = 0,\, \sigma = 10) \\
\sigma_\alpha &\sim \text{Inverse-Gamma}\,(\alpha = 0.5,\, \beta = 0.5) \\
\sigma_\beta &\sim \text{Inverse-Gamma}\,(\alpha = 0.5,\, \beta = 0.5) \\
\sigma_\sigma &\sim \text{Inverse-Gamma}\,(\alpha = 0.5,\, \beta = 0.5) \\
\sigma_\tau &\sim \text{Inverse-Gamma}\,(\alpha = 0.5,\, \beta = 0.5) \\
\boldsymbol{\alpha}_i &\sim \text{Normal}\,(\mu = \mu_\alpha,\, \sigma = \sigma_\alpha) \\
\boldsymbol{\beta}_i &\sim \text{Normal}\,(\mu = \mu_\beta,\, \sigma = \sigma_\beta) \\
\boldsymbol{\sigma}_i &\sim \text{Normal}^+\,(\mu = \mu_\sigma,\, \sigma = \sigma_\sigma) \\
\boldsymbol{\tau}_i &\sim \text{Normal}^+\,(\mu = \mu_\tau,\, \sigma = \sigma_\tau) \\
\boldsymbol{m}_{ik} &= \begin{cases} \boldsymbol{\alpha}_i - \frac{1}{2} \cdot \boldsymbol{\beta}_i & \text{if } X_{ik\ell} = 1 \\ \boldsymbol{\alpha}_i + \frac{1}{2} \cdot \boldsymbol{\beta}_i & \text{if } X_{ik\ell} = 2 \end{cases} \\
Y_{ik\ell} &\sim \text{ex-Gaussian}\left(\mu = \boldsymbol{m}_{ik},\, \sigma = \boldsymbol{\sigma}_i,\, \lambda = \frac{1}{\boldsymbol{\tau}_i}\right)
\end{aligned}
$$

Ex-Gaussian hierarchial model (λ parameterization)

Figure 5

Ex-Gaussian hierarchical model diagram: λ parameterization

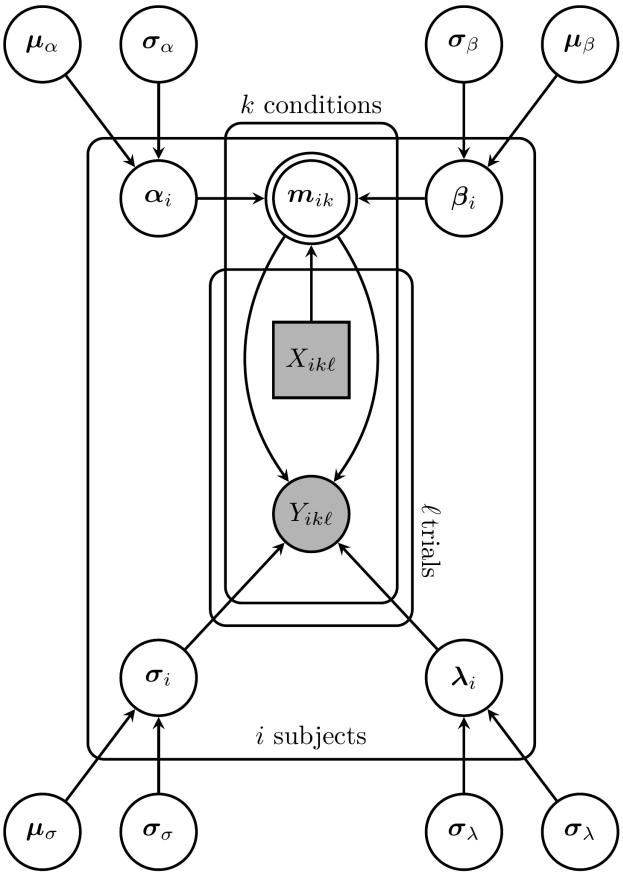

$$
\begin{aligned}
\mu_\alpha &\sim \text{Normal}^+\,(\mu = 0,\, \sigma = 10) \\
\mu_\beta &\sim \text{Normal}\,(\mu = 0,\, \sigma = 10) \\
\mu_\sigma &\sim \text{Normal}^+\,(\mu = 0,\, \sigma = 10) \\
\mu_\lambda &\sim \text{Normal}^+\,(\mu = 0,\, \sigma = 10) \\
\sigma_\alpha &\sim \text{Inverse-Gamma}\,(\alpha = 0.5,\, \beta = 0.5) \\
\sigma_\beta &\sim \text{Inverse-Gamma}\,(\alpha = 0.5,\, \beta = 0.5) \\
\sigma_\sigma &\sim \text{Inverse-Gamma}\,(\alpha = 0.5,\, \beta = 0.5) \\
\sigma_\lambda &\sim \text{Inverse-Gamma}\,(\alpha = 0.5,\, \beta = 0.5) \\
\boldsymbol{\alpha}_i &\sim \text{Normal}\,(\mu = \mu_\alpha,\, \sigma = \sigma_\alpha) \\
\boldsymbol{\beta}_i &\sim \text{Normal}\,(\mu = \mu_\beta,\, \sigma = \sigma_\beta) \\
\boldsymbol{\sigma}_i &\sim \text{Normal}^+\,(\mu = \mu_\sigma,\, \sigma = \sigma_\sigma) \\
\boldsymbol{\lambda}_i &\sim \text{Normal}^+\,(\mu = \mu_\lambda,\, \sigma = \sigma_\lambda) \\
\boldsymbol{m}_{ik} &= \begin{cases} \boldsymbol{\alpha}_i - \frac{1}{2} \cdot \boldsymbol{\beta}_i & \text{if } X_{ik\ell} = 1 \\ \boldsymbol{\alpha}_i + \frac{1}{2} \cdot \boldsymbol{\beta}_i & \text{if } X_{ik\ell} = 2 \end{cases} \\
Y_{ik\ell} &\sim \text{ex-Gaussian}\,(\mu = \boldsymbol{m}_{ik},\, \sigma = \boldsymbol{\sigma}_i,\, \lambda = \boldsymbol{\lambda}_i)
\end{aligned}
$$

Shifted-lognormal hierarchical model

Figure 6

Shifted-lognormal hierarchical model diagram

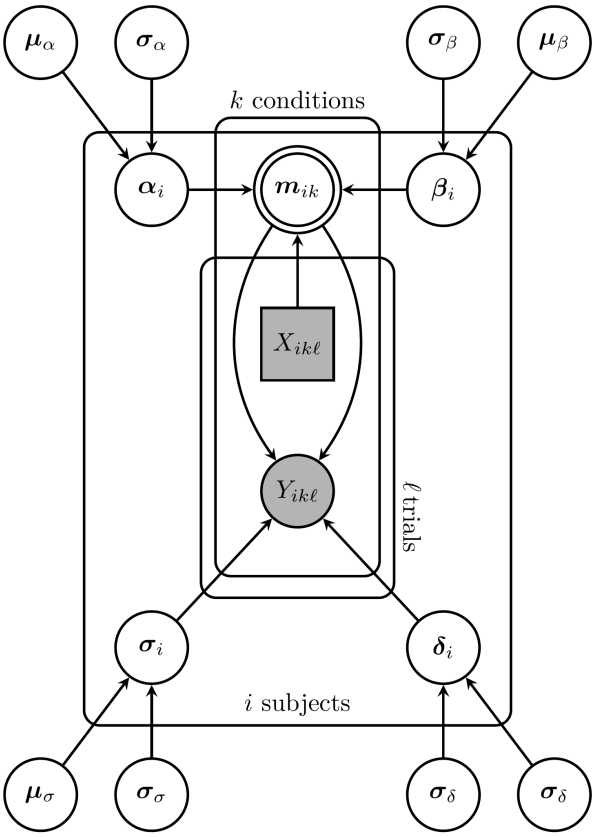

$$
\begin{aligned}
\mu_\alpha &\sim \text{Normal}^+\,(\mu = 0,\, \sigma = 10) \\
\mu_\beta &\sim \text{Normal}\,(\mu = 0,\, \sigma = 10) \\
\mu_\sigma &\sim \text{Normal}^+\,(\mu = 0,\, \sigma = 10) \\
\mu_\delta &\sim \text{Normal}^+\,(\mu = 0,\, \sigma = 10) \\
\sigma_\alpha &\sim \text{Inverse-Gamma}\,(\alpha = 0.5,\, \beta = 0.5) \\
\sigma_\beta &\sim \text{Inverse-Gamma}\,(\alpha = 0.5,\, \beta = 0.5) \\
\sigma_\sigma &\sim \text{Inverse-Gamma}\,(\alpha = 0.5,\, \beta = 0.5) \\
\sigma_\delta &\sim \text{Inverse-Gamma}\,(\alpha = 0.5,\, \beta = 0.5) \\
\boldsymbol{\alpha}_i &\sim \text{Normal}\,(\mu = \mu_\alpha,\, \sigma = \sigma_\alpha) \\
\boldsymbol{\beta}_i &\sim \text{Normal}\,(\mu = \mu_\beta,\, \sigma = \sigma_\beta) \\
\boldsymbol{\sigma}_i &\sim \text{Normal}^+\,(\mu = \mu_\sigma,\, \sigma = \sigma_\sigma) \\
\boldsymbol{\delta}_i &\sim \text{Normal}^+\,(\mu = \mu_\delta,\, \sigma = \sigma_\delta) \\
\boldsymbol{m}_{ik} &= \begin{cases} \boldsymbol{\alpha}_i - \frac{1}{2} \cdot \boldsymbol{\beta}_i & \text{if } X_{ik\ell} = 1 \\ \boldsymbol{\alpha}_i + \frac{1}{2} \cdot \boldsymbol{\beta}_i & \text{if } X_{ik\ell} = 2 \end{cases} \\
Y_{ik\ell} &\sim \text{Shifted-lognormal}\,(\mu = \boldsymbol{m}_{ik},\, \sigma = \boldsymbol{\sigma}_i,\, \delta = \boldsymbol{\delta}_i)
\end{aligned}
$$

SM7: meta-analysis results

To synthesize the parameter estimates obtained from the Gaussian, Ex-Gaussian, and Shifted-Lognormal multilevel models across the 59 datasets, we conducted a series of multilevel meta-analyses using the `{metafor}` package (Viechtbauer, 2010). For each model parameter (e.g., μ_α, σ_β), the posterior mean estimated from the individual dataset fitting was used as the observed effect size, weighted by the posterior variance as the sampling variance. To ensure distributional assumptions were met and to respect the parameter space, strictly positive parameters (e.g., standard deviations of random effects, σ, τ, shift and scale parameters) were meta-analyzed on the natural logarithmic scale. The resulting pooled estimates and confidence intervals for these parameters were back-transformed (exponentiated) for reporting.

To obtain specific pooled estimates for each experimental paradigm, Task (Flanker, Simon, Stroop) was included as a fixed effect moderator (specified without an intercept). To account for the nested structure of the data – where multiple datasets often originated from the same published study – we included task-specific random effects (i.e., random intercepts for each task type) grouped by study. We specified a diagonal covariance structure, which allows for distinct heterogeneity variances for each task. All models were estimated using Restricted Maximum Likelihood (REML), and standard errors and 95% confidence intervals were computed using the Knapp-Hartung adjustment to ensure robust inference.

Table 2

Meta-analysis Results: Gaussian Model Point Estimates and Confidence Intervals

	Flanker		Simon		Stroop	
Param.	Est.	95% CI	Est.	95% CI	Est.	95% CI
μ_α	0.621	[0.027, 1.215]	0.557	[0.204, 0.910]	0.654	[0.209, 1.099]
μ_β	0.045	[-0.049, 0.139]	0.054	[-0.052, 0.160]	0.064	[-0.009, 0.138]
μ_σ	0.172	[0.106, 0.278]	0.153	[0.085, 0.273]	0.188	[0.113, 0.313]
σ_α	0.098	[0.035, 0.271]	0.086	[0.039, 0.190]	0.115	[0.051, 0.263]
σ_β	0.027	[0.012, 0.062]	0.026	[0.014, 0.047]	0.036	[0.022, 0.059]
σ_σ	0.072	[0.051, 0.102]	0.065	[0.046, 0.093]	0.070	[0.053, 0.093]
shift_σ	0.075	[0.042, 0.133]	0.066	[0.030, 0.145]	0.092	[0.035, 0.239]
scale_σ	0.120	[0.085, 0.169]	0.108	[0.076, 0.155]	0.117	[0.088, 0.155]

Note. Est. represent meta-analitic pooled point estimates

Table 3

Meta-analysis Results: Ex-Gaussian Model Point Estimates and Confidence Intervals

	Flanker		Simon		Stroop	
Param.	Est.	95% CI	Est.	95% CI	Est.	95% CI
μ_α	0.470	[0.004, 0.937]	0.421	[0.201, 0.640]	0.483	[0.025, 0.942]
μ_β	0.035	[-0.043, 0.112]	0.053	[-0.018, 0.124]	0.038	[-0.041, 0.116]
μ_σ	0.059	[0.023, 0.153]	0.050	[0.029, 0.089]	0.066	[0.034, 0.129]
μ_τ	0.148	[0.077, 0.282]	0.132	[0.070, 0.249]	0.164	[0.084, 0.319]
$\mu_\lambda^\dagger$	7.758	[4.361, 13.802]	8.740	[4.407, 17.334]	6.887	[3.119, 15.208]
σ_α	0.063	[0.017, 0.229]	0.047	[0.021, 0.104]	0.084	[0.024, 0.292]
σ_β	0.021	[0.008, 0.057]	0.023	[0.012, 0.043]	0.025	[0.011, 0.054]
σ_σ	0.021	[0.009, 0.051]	0.015	[0.010, 0.023]	0.025	[0.014, 0.044]
σ_τ	0.004	[0.001, 0.013]	0.004	[0.001, 0.009]	0.004	[0.002, 0.009]
$\sigma_\lambda^\dagger$	14.143	[4.956, 40.356]	17.837	[4.260, 74.689]	8.146	[1.376, 48.221]
shift_σ	0.030	[0.015, 0.059]	0.030	[0.020, 0.045]	0.032	[0.018, 0.058]
shift_τ	0.061	[0.044, 0.085]	0.052	[0.026, 0.103]	0.075	[0.031, 0.178]
$\text{shift}_\lambda^\dagger$	2.847	[1.503, 5.390]	3.063	[1.911, 4.909]	2.840	[1.673, 4.821]
scale_σ	0.035	[0.015, 0.084]	0.026	[0.017, 0.039]	0.041	[0.023, 0.074]
scale_τ	0.106	[0.059, 0.190]	0.100	[0.062, 0.159]	0.108	[0.074, 0.159]
$\text{scale}_\lambda^\dagger$	6.239	[3.693, 10.538]	7.006	[3.424, 14.337]	4.735	[1.946, 11.520]

Note. Est. represents meta-analytic pooled point estimates. † These parameters were estimated using a model with rate (λ) parameterization rather than a τ-based formulation.

Table 4

Meta-analysis Results: Shifted-lognormal Model Point Estimates and Confidence Intervals

	Flanker		Simon		Stroop	
Param.	Est.	95% CI	Est.	95% CI	Est.	95% CI
μ_α	-1.208	[-2.427, 0.011]	-1.288	[-1.943, -0.632]	-1.103	[-1.954, -0.251]
μ_β	0.130	[-0.108, 0.368]	0.217	[-0.214, 0.648]	0.157	[0.001, 0.313]
μ_δ	0.262	[0.061, 0.463]	0.241	[0.185, 0.297]	0.259	[0.110, 0.408]
μ_σ	0.432	[0.332, 0.561]	0.435	[0.359, 0.528]	0.430	[0.306, 0.603]
σ_α	0.273	[0.197, 0.378]	0.238	[0.165, 0.343]	0.275	[0.213, 0.355]
σ_β	0.075	[0.040, 0.139]	0.080	[0.066, 0.096]	0.074	[0.056, 0.098]
σ_δ	0.066	[0.032, 0.138]	0.045	[0.025, 0.081]	0.063	[0.033, 0.124]
σ_σ	0.100	[0.087, 0.115]	0.097	[0.081, 0.117]	0.093	[0.070, 0.124]
shift_σ	0.297	[0.185, 0.476]	0.307	[0.247, 0.381]	0.289	[0.127, 0.660]
scale_σ	0.166	[0.144, 0.190]	0.161	[0.134, 0.194]	0.155	[0.116, 0.206]

Note. Est. represent meta-analitic pooled point estimates

SM8: population correlation matrices in the simulation study

Unidimensional models

$\mathbf{\Lambda} = .3$

$$\mathbf{R}_{\text{uni, .3}} = \begin{bmatrix} 1.000 & 0.090 & 0.090 & 0.090 & 0.090 & 0.090 \\ 0.090 & 1.000 & 0.090 & 0.090 & 0.090 & 0.090 \\ 0.090 & 0.090 & 1.000 & 0.090 & 0.090 & 0.090 \\ 0.090 & 0.090 & 0.090 & 1.000 & 0.090 & 0.090 \\ 0.090 & 0.090 & 0.090 & 0.090 & 1.000 & 0.090 \\ 0.090 & 0.090 & 0.090 & 0.090 & 0.090 & 1.000 \end{bmatrix}$$

$\mathbf{\Lambda} = .5$

$$\mathbf{R}_{\text{uni, .5}} = \begin{bmatrix} 1.000 & 0.250 & 0.250 & 0.250 & 0.250 & 0.250 \\ 0.250 & 1.000 & 0.250 & 0.250 & 0.250 & 0.250 \\ 0.250 & 0.250 & 1.000 & 0.250 & 0.250 & 0.250 \\ 0.250 & 0.250 & 0.250 & 1.000 & 0.250 & 0.250 \\ 0.250 & 0.250 & 0.250 & 0.250 & 1.000 & 0.250 \\ 0.250 & 0.250 & 0.250 & 0.250 & 0.250 & 1.000 \end{bmatrix}$$

$\mathbf{\Lambda} = .7$

$$\mathbf{R}_{\text{uni, .7}} = \begin{bmatrix} 1.000 & 0.490 & 0.490 & 0.490 & 0.490 & 0.490 \\ 0.490 & 1.000 & 0.490 & 0.490 & 0.490 & 0.490 \\ 0.490 & 0.490 & 1.000 & 0.490 & 0.490 & 0.490 \\ 0.490 & 0.490 & 0.490 & 1.000 & 0.490 & 0.490 \\ 0.490 & 0.490 & 0.490 & 0.490 & 1.000 & 0.490 \\ 0.490 & 0.490 & 0.490 & 0.490 & 0.490 & 1.000 \end{bmatrix}$$

Exploratory Factor Models

$\mathbf{\Lambda} = .3$

$$\mathbf{R}_{\text{uni, .3}} = \begin{bmatrix} 1.000 & 0.098 & 0.098 & 0.054 & 0.054 & 0.054 \\ 0.098 & 1.000 & 0.098 & 0.054 & 0.054 & 0.054 \\ 0.098 & 0.098 & 1.000 & 0.054 & 0.054 & 0.054 \\ 0.054 & 0.054 & 0.054 & 1.000 & 0.098 & 0.098 \\ 0.054 & 0.054 & 0.054 & 0.098 & 1.000 & 0.098 \\ 0.054 & 0.054 & 0.054 & 0.098 & 0.098 & 1.000 \end{bmatrix}$$

$\mathbf{\Lambda} = .5$

$$\mathbf{R}_{\text{uni, .5}} = \begin{bmatrix} 1.000 & 0.273 & 0.273 & 0.150 & 0.150 & 0.150 \\ 0.273 & 1.000 & 0.273 & 0.150 & 0.150 & 0.150 \\ 0.273 & 0.273 & 1.000 & 0.150 & 0.150 & 0.150 \\ 0.150 & 0.150 & 0.150 & 1.000 & 0.273 & 0.273 \\ 0.150 & 0.150 & 0.150 & 0.273 & 1.000 & 0.273 \\ 0.150 & 0.150 & 0.150 & 0.273 & 0.273 & 1.000 \end{bmatrix}$$

$\mathbf{\Lambda} = .7$

$$\mathbf{R}_{\text{uni, .7}} = \begin{bmatrix} 1.000 & 0.534 & 0.534 & 0.294 & 0.294 & 0.294 \\ 0.534 & 1.000 & 0.534 & 0.294 & 0.294 & 0.294 \\ 0.534 & 0.534 & 1.000 & 0.294 & 0.294 & 0.294 \\ 0.294 & 0.294 & 0.294 & 1.000 & 0.534 & 0.534 \\ 0.294 & 0.294 & 0.294 & 0.534 & 1.000 & 0.534 \\ 0.294 & 0.294 & 0.294 & 0.534 & 0.534 & 1.000 \end{bmatrix}$$

Confirmatory Factor Models

$\mathbf{\Lambda} = .3$

$$\mathbf{R}_{\text{uni, .3}} = \begin{bmatrix} 1.000 & 0.090 & 0.090 & 0.045 & 0.045 & 0.045 \\ 0.090 & 1.000 & 0.090 & 0.045 & 0.045 & 0.045 \\ 0.090 & 0.090 & 1.000 & 0.045 & 0.045 & 0.045 \\ 0.045 & 0.045 & 0.045 & 1.000 & 0.090 & 0.090 \\ 0.045 & 0.045 & 0.045 & 0.090 & 1.000 & 0.090 \\ 0.045 & 0.045 & 0.045 & 0.090 & 0.090 & 1.000 \end{bmatrix}$$

$\mathbf{\Lambda} = .5$

$$\mathbf{R}_{\text{uni, .5}} = \begin{bmatrix} 1.000 & 0.250 & 0.250 & 0.125 & 0.125 & 0.125 \\ 0.250 & 1.000 & 0.250 & 0.125 & 0.125 & 0.125 \\ 0.250 & 0.250 & 1.000 & 0.125 & 0.125 & 0.125 \\ 0.125 & 0.125 & 0.125 & 1.000 & 0.250 & 0.250 \\ 0.125 & 0.125 & 0.125 & 0.250 & 1.000 & 0.250 \\ 0.125 & 0.125 & 0.125 & 0.250 & 0.250 & 1.000 \end{bmatrix}$$

$\mathbf{\Lambda} = .7$

$$\mathbf{R}_{\text{uni, .7}} = \begin{bmatrix} 1.000 & 0.490 & 0.490 & 0.245 & 0.245 & 0.245 \\ 0.490 & 1.000 & 0.490 & 0.245 & 0.245 & 0.245 \\ 0.490 & 0.490 & 1.000 & 0.245 & 0.245 & 0.245 \\ 0.245 & 0.245 & 0.245 & 1.000 & 0.490 & 0.490 \\ 0.245 & 0.245 & 0.245 & 0.490 & 1.000 & 0.490 \\ 0.245 & 0.245 & 0.245 & 0.490 & 0.490 & 1.000 \end{bmatrix}$$

SM9: ANOVA meta-models results

Table 5
Effect sizes (ω_p^2) for Correlations and Factor Loadings

	Correlations				Factor loadings				
Predictor	ASRMR	AAB	APSD	AECR	ARMSE	AAB	APSD	AECR	ϕ
DGM	**0.29**	**0.99**	**0.97**	**0.99**	**0.98**	**0.98**	**0.98**	**0.90**	**0.96**
I	**0.99**	**0.91**	**1.00**	**0.99**	**0.98**	**0.97**	**0.99**	**0.92**	**0.98**
L	**1.00**	**1.00**	**0.49**	**1.00**	**0.99**	**0.92**	**1.00**	**0.98**	**1.00**
LF	**0.95**	**0.97**	**0.98**	**0.99**	**0.85**	**0.91**	**0.98**	**0.96**	**0.82**
M	**1.00**	**1.00**	**1.00**	**1.00**	**0.97**	**0.97**	**0.94**	**0.92**	**0.95**
R	**1.00**	**0.99**	**1.00**	**0.99**	**1.00**	**0.99**	**1.00**	**0.82**	**0.99**
DGM x L	**0.90**	**0.97**	0.02	**0.98**	**0.93**	**0.90**	**0.79**	**0.91**	**0.69**
DGM x M	**0.98**	**0.94**	**1.00**	**0.98**	**0.38**	**0.85**	**0.95**	**0.96**	0.00
DGM x R	**0.93**	**0.74**	**0.99**	**0.49**	**0.90**	**0.90**	**0.82**	**0.24**	**0.88**
I x DGM	**0.78**	**0.40**	**0.81**	**0.84**	0.02	0.00	0.05	**0.66**	0.11
I x L	0.00	**0.56**	0.00	**0.96**	**0.63**	**0.37**	**0.71**	**0.75**	**0.94**
I x LF	0.10	**0.17**	**0.69**	**0.46**	**0.58**	**0.61**	**0.79**	**0.52**	**0.45**
I x M	**0.97**	**0.66**	**0.99**	**0.98**	0.00	0.00	0.00	**0.43**	0.00
I x R	**0.92**	**0.72**	**0.99**	**0.67**	0.00	**0.52**	**0.63**	**0.16**	0.08
L x M	**0.98**	**0.99**	**0.53**	**1.00**	**0.85**	**0.83**	**0.69**	**0.90**	**0.79**
LF x DGM	**0.14**	**0.67**	0.00	**0.78**	0.01	**0.14**	**0.34**	**0.68**	0.04
LF x L	**0.75**	**0.90**	**0.71**	**0.97**	**0.95**	**0.98**	**0.97**	**0.91**	**0.95**
LF x M	**0.81**	**0.93**	**0.96**	**0.99**	0.08	0.13	0.09	**0.59**	0.10
LF x R	**0.72**	**0.74**	**0.88**	**0.79**	**0.59**	**0.66**	**0.86**	**0.65**	**0.46**
R x L	**0.97**	**0.98**	**0.56**	**0.98**	**0.94**	**0.87**	**0.91**	0.00	**0.97**
R x M	**0.99**	**0.93**	**1.00**	**0.99**	**0.81**	**0.80**	**0.18**	**0.44**	**0.80**
DGM x L x M	**0.73**	**0.88**	**0.27**	**0.96**	**0.79**	**0.78**	**0.53**	**0.92**	**0.34**
DGM x R x L	0.00	**0.55**	**0.40**	**0.54**	**0.84**	**0.76**	**0.68**	**0.42**	**0.28**
DGM x R x M	**0.98**	**0.85**	**1.00**	**0.93**	0.00	**0.15**	**0.92**	**0.71**	0.00
I x DGM x L	**0.27**	**0.16**	0.11	**0.64**	**0.26**	**0.23**	**0.30**	**0.55**	**0.26**
I x DGM x M	**0.89**	**0.70**	**0.95**	**0.75**	0.10	**0.37**	**0.26**	**0.62**	0.00

Table 5
Effect sizes (ω_p^2) for Correlations and Factor Loadings (continued)

	Correlations				Factor loadings				
Predictor	ASRMR	AAB	APSD	AECR	ARMSE	AAB	APSD	AECR	ϕ
I x DGM x R	**0.75**	0.06	**0.89**	0.00	0.00	0.00	0.00	0.00	0.08
I x L x M	**0.34**	**0.16**	0.00	**0.95**	0.00	0.00	0.02	**0.55**	**0.35**
I x LF x DGM	0.00	0.00	0.00	0.03	0.00	0.00	0.00	**0.39**	0.00
I x LF x L	0.00	0.00	**0.25**	**0.20**	**0.39**	**0.62**	**0.59**	0.13	**0.41**
I x LF x M	0.00	0.00	**0.23**	**0.53**	0.00	0.00	0.00	0.11	0.00
I x LF x R	0.00	0.00	**0.37**	0.03	0.00	0.01	**0.21**	**0.46**	0.08
I x R x L	**0.24**	**0.53**	0.00	**0.79**	**0.52**	**0.44**	**0.54**	0.06	**0.77**
I x R x M	**0.95**	**0.46**	**0.98**	0.09	0.00	0.01	0.00	0.11	0.00
LF x DGM x L	0.01	**0.34**	0.00	**0.67**	0.00	0.04	0.05	**0.77**	0.02
LF x DGM x M	0.04	**0.47**	**0.54**	**0.77**	0.00	0.12	0.00	**0.76**	0.00
LF x DGM x R	0.00	0.00	0.00	0.00	0.00	0.05	**0.15**	0.09	0.04
LF x L x M	**0.76**	**0.83**	**0.38**	**0.97**	0.00	0.00	0.03	**0.73**	**0.22**
LF x R x L	**0.41**	**0.48**	**0.26**	**0.76**	**0.69**	**0.77**	**0.78**	**0.45**	**0.68**
LF x R x M	0.08	**0.45**	**0.55**	**0.56**	0.00	0.02	0.00	**0.17**	**0.16**
R x L x M	**0.81**	**0.83**	**0.50**	**0.96**	**0.59**	**0.54**	**0.43**	**0.30**	**0.23**
DGM x R x L x M	**0.70**	**0.70**	**0.43**	**0.89**	**0.27**	0.09	0.07	**0.41**	0.09
I x DGM x L x M	**0.57**	**0.46**	0.10	**0.79**	0.07	0.04	0.00	**0.46**	0.00
I x DGM x R x L	**0.17**	0.00	**0.17**	**0.21**	0.10	0.00	0.01	0.00	**0.15**
I x DGM x R x M	**0.90**	**0.72**	**0.96**	**0.30**	0.00	**0.24**	0.06	0.02	0.00
I x LF x DGM x L	0.04	0.00	0.00	**0.17**	0.00	0.00	0.00	0.09	0.00
I x LF x DGM x M	0.00	0.00	0.00	0.11	0.00	0.00	0.00	**0.31**	0.00
I x LF x DGM x R	0.00	0.00	0.00	0.00	0.00	0.00	0.00	**0.18**	0.08
I x LF x L x M	**0.18**	0.02	**0.26**	**0.58**	0.00	0.00	0.00	0.11	0.08
I x LF x R x L	**0.23**	0.04	**0.33**	**0.66**	**0.30**	**0.33**	**0.24**	**0.54**	**0.55**
I x LF x R x M	0.00	0.00	0.00	0.09	0.00	0.00	0.00	0.11	0.00
I x R x L x M	**0.17**	**0.14**	**0.21**	**0.85**	0.00	0.00	0.00	0.00	0.05
LF x DGM x L x M	0.10	**0.24**	0.00	**0.61**	0.00	**0.25**	0.09	**0.58**	0.00
LF x DGM x R x L	0.09	0.00	0.00	0.00	0.04	0.00	0.08	**0.14**	**0.18**

Table 5

Effect sizes (ω_p^2) for Correlations and Factor Loadings (continued)

	Correlations				Factor loadings				
Predictor	ASRMR	AAB	APSD	AECR	ARMSE	AAB	APSD	AECR	ϕ
LF x DGM x R x M	0.04	0.05	**0.37**	**0.43**	0.00	0.00	0.00	**0.21**	0.00
LF x R x L x M	**0.42**	**0.34**	**0.24**	**0.67**	0.00	0.00	0.00	0.00	0.00
I x DGM x R x L x M	**0.51**	**0.44**	**0.25**	0.00	0.09	0.00	0.00	0.00	0.11
I x LF x DGM x L x M	0.04	0.02	0.08	**0.27**	0.00	0.00	0.00	0.00	0.00
I x LF x DGM x R x M	0.00	0.00	0.00	0.00	0.00	0.00	0.00	0.00	0.00
I x LF x R x L x M	**0.17**	0.00	**0.34**	**0.53**	0.00	0.00	0.00	0.00	0.00
LF x DGM x R x L x M	0.12	0.05	0.00	0.05	0.06	0.12	0.00	**0.31**	0.00

Note. Effect sizes equal or higuer than .14 are marked in bold. I = Sample size (100 or 200). LF = Latent factors (unidimensional, two-factor CFA and two-factor CFA). DGM = Data-Generation Model (ex-Gaussian or Shifted-lognormal). R = Reliability (0.3, 0.5 or 0.7). L = Standardized factor loadings (0.3, 0.5 or 0.7). M = Estimation method (Gaussian HFM or True GenHFM). ASRMR = Average Standardized Root Mean Residuals. AAB = Average Absolute Bias. APSD = Average Posterior Standard Deviation (Average Standard Error in frequentist correlations). AECR = Average Empirical Coverage Rate. ϕ = Tucker Congruence Index.

SM10: Prior distributions used in Viviani et al. reanalysis

Table 6 shows the prior distributios used in the hierarchical component of the exploratory GenHFMs. In all cases, we set uniform priors for all latent factor component parameters (i.e., h^2, $\mathbf{\Lambda}$ and $\mathbf{\Psi}$).

Table 6
Prior distributions used in the Viviani et al. reanalysis for the hierarchical component

Model	Parameter	Prior Distribution
Gaussian	μ_α	Normal$(\mu = 0.654, \sigma = 0.453)$
	μ_β	Normal$(\mu = 0.064, \sigma = 0.074)$
	shift_σ	Normal$^+(\mu = 0.092, \sigma = 0.101)$
	σ_α	Student-$t^+(\nu = 3, \mu = 0.115, \sigma = 0.105)$
	σ_β	Student-$t^+(\nu = 3, \mu = 0.036, \sigma = 0.019)$
	scale_σ	Student-$t^+(\nu = 3, \mu = 0.117, \sigma = 0.034)$
Ex-Gaussian	μ_α	Normal$(\mu = 0.483, \sigma = 0.451)$
	μ_β	Normal$(\mu = 0.038, \sigma = 0.079)$
	shift_σ	Normal$^+(\mu = 0.032, \sigma = 0.021)$
	shift_λ	Normal$^+(\mu = 2.841, \sigma = 1.570)$
	σ_α	Student-$t^+(\nu = 3, \mu = 0.084, \sigma = 0.132)$
	σ_β	Student-$t^+(\nu = 3, \mu = 0.025, \sigma = 0.022)$
	scale_σ	Student-$t^+(\nu = 3, \mu = 0.041, \sigma = 0.025)$
	scale_λ	Student-$t^+(\nu = 3, \mu = 4.735, \sigma = 4.783)$
Shifted-Lognormal	μ_α	Normal$(\mu = -1.105, \sigma = 0.862)$
	μ_β	Normal$(\mu = 0.157, \sigma = 0.156)$
	μ_δ	Normal$^+(\mu = 0.259, \sigma = 0.150)$
	shift_σ	Normal$^+(\mu = 0.289, \sigma = 0.266)$
	σ_α	Student-$t^+(\nu = 3, \mu = 0.275, \sigma = 0.071)$
	σ_β	Student-$t^+(\nu = 3, \mu = 0.074, \sigma = 0.021)$
	σ_δ	Student-$t^+(\nu = 3, \mu = 0.063, \sigma = 0.046)$
	scale_σ	Student-$t^+(\nu = 3, \mu = 0.155, \sigma = 0.045)$

Note. Values in parentheses denote location and scale parameters (for Normal) or degrees of freedom, location, and scale (for Student-t). **Ex-Gaussian:** Parameterized using rate (λ) instead of τ, where $\lambda = 1/\tau$. **Notation:** Normal$^+$ and Student-t^+ denote distributions truncated at zero.

References

Anderson, T. W., & Rubin, H. (1956). Statistical inference in factor analysis. In J. Neyman (Ed.), *Proceedings of the third berkeley symposium on mathematical statistics and probability* (Vol. 5, pp. 111–150). University of California Press.

Carvalho, C. M., Chang, J., Lucas, J. E., Nevins, J. R., Wang, Q., & West, M. (2008). High-dimensional sparse factor modeling: Applications in gene expression genomics. *Journal of the American Statistical Association*, *103*(484), 1438–1456. https://doi.org/10.1198/016214508000000869

Greene, W. H. (2011). *Econometric analysis* (7th ed.). Prentice Hall.

Mehrvarz, M., & Rouder, J. N. (2025). Estimating correlations in low-reliability settings with constrained hierarchical models. *Behavior Research Methods*, *57*, 59. https://doi.org/10.3758/s13428-024-02568-0

Merkle, E. C., Fitzsimmons, E., Uanhoro, J., & Goodrich, B. (2021). Efficient Bayesian structural equation modeling in Stan. *Journal of Statistical Software*, *100*(6), 1–22. https://doi.org/10.18637/jss.v100.i06

Papastamoulis, P., & Ntzoufras, I. (2022). On the identifiability of bayesian factor analytic models. *Statistics and Computing*, *32*(2), 23. https://doi.org/10.1007/s11222-022-10084-4

Poworoznek, E., Anceschi, N., Ferrari, F., & Dunson, D. B. (2024). Efficiently resolving rotational ambiguity in bayesian matrix sampling with matching. *arXiv Preprint arXiv:2107.13783v2*. https://doi.org/10.48550/arXiv.2107.13783

Rouder, J. N., Kumar, A., & Haaf, J. M. (2023). Why many studies of individual differences with inhibition tasks may not localize correlations. *Psychonomic Bulletin & Review*. https://doi.org/10.3758/s13423-023-02293-3

Viechtbauer, W. (2010). Conducting meta-analyses in R with the metafor package. *Journal of Statistical Software*, *36*(3), 1–48. https://doi.org/10.18637/jss.v036.i03