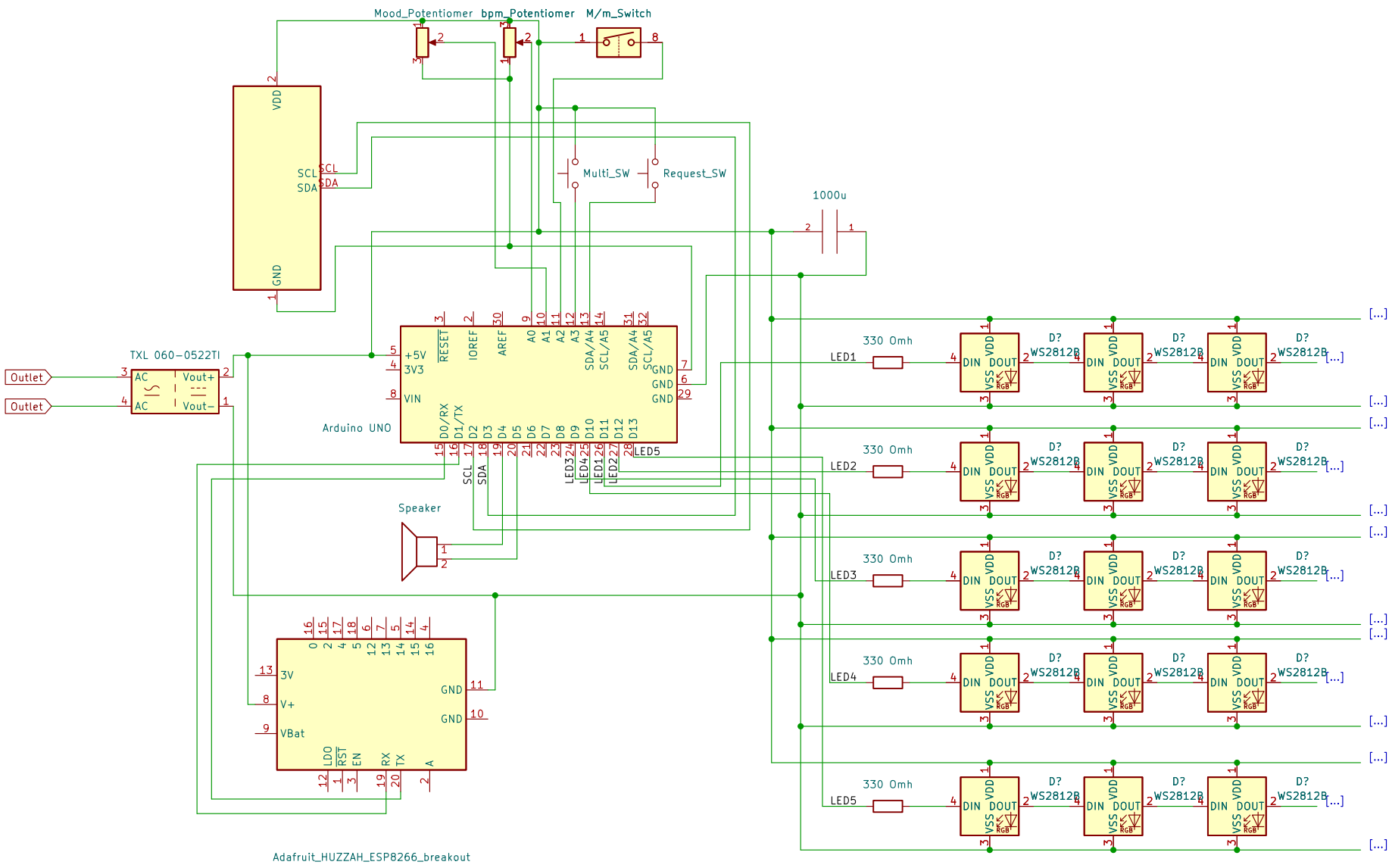

Sheet: /
File: Project.kicad_sch

Title: SonicCascadeRhythmRumble

Size: A4	Date: 2023-05-22	Rev: V2
KiCad E.D.A. eeschema (6.0.7)		Id: 1/1