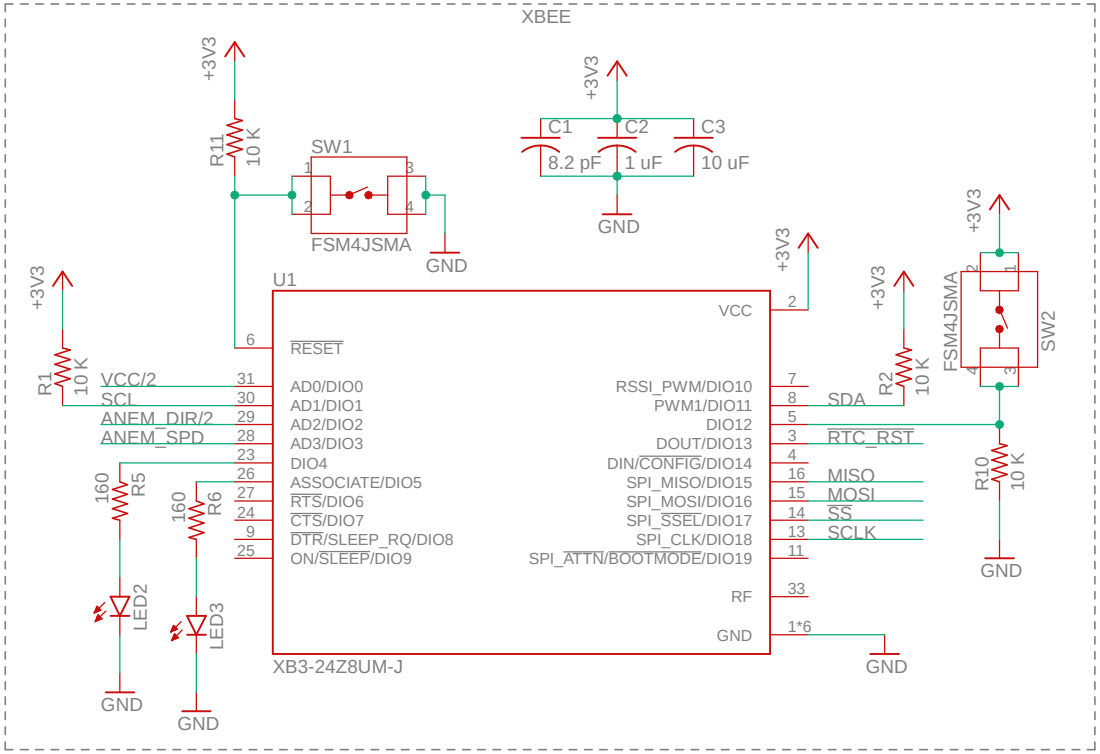

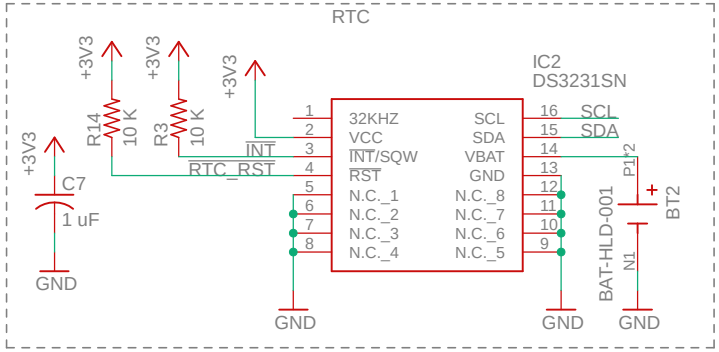

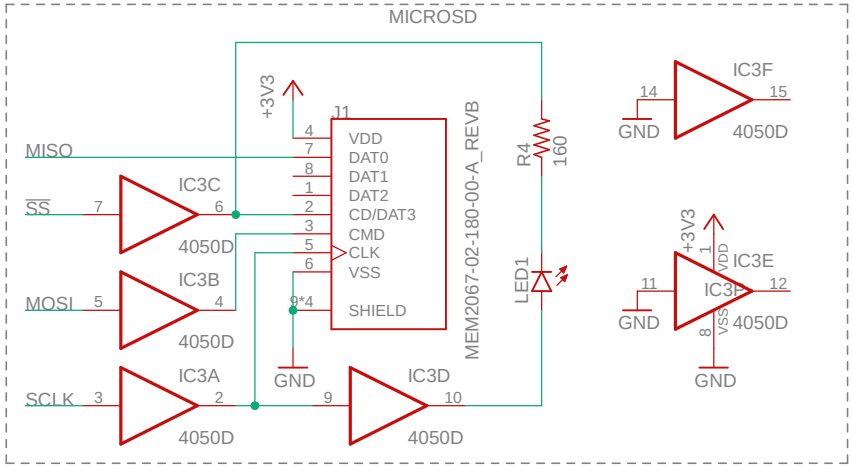

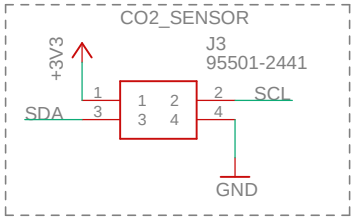

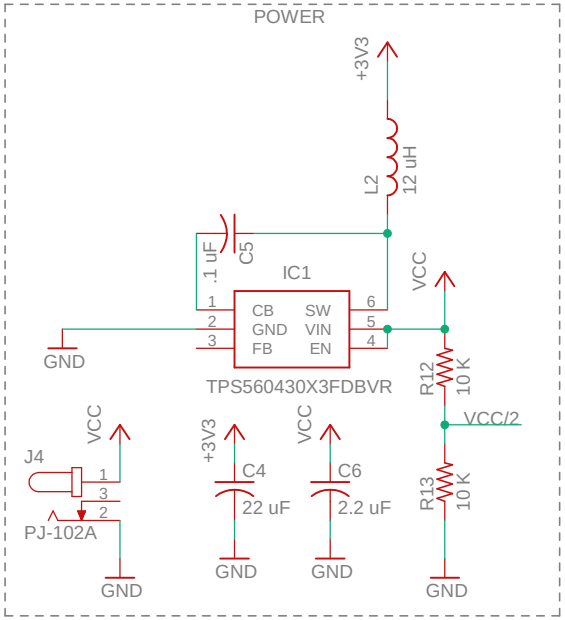

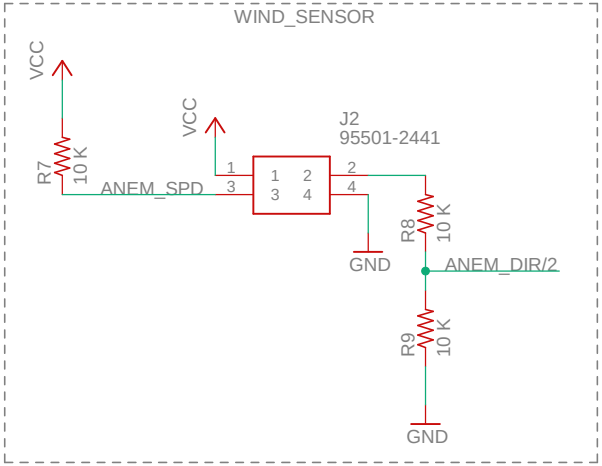

TITLE: Node

DESCRIPTION:
Mesh network CO2 sensor network node. Powered by 5 volt power jack.
Uses XBEE 3 pro mmt for processing and radio communications.
Node contains an RTC clock and MicroSD read/write capabilities.

Authors: Jacob Larkin and Adriann Liceralde v0.1

Date: 2/16/2021 2:25 PM Sheet: 1/1