Power_Buss_IF

File: pwr_S100buss.kicad_sch

Buffers_Memory

File: buffmem.kicad_sch

Video Generator

File: vidgen.kicad_sch

Clock_and_address

File: clockaddr.kicad_sch

Video Timing

File: timing.kicad_sch

IO Chips

File: inout.kicad_sch

NOTES/ERRATA from 1.0 to 1.1-002:
01. Resistor footprints are one size too small -- 1/4w uses 1/8w, etc.
02. U49/78L12 silkscreen is backwards -- mount device opposite.
03. Several chips have unconnected VCC or GND leads that might be from the use of ONE and ZERO.

ERRATA from 1.1-002 to 1.1-003
01. J6 (address select) is flipped. Rotated 180.
02. Board relies on SLAVE_CLR [54] to work but not all boards (like the SCP 200B) generate that signal. Reused spare gate of the LS125 and added a jumper and pull-up to generate that signal driven by POC [99].

Schematic page 1A
Redraw/modifications (c) Richard A. Cini
Lomas Data Produtcs

Sheet: /
File: s100_ColorMagic-1.1-003.kicad_sch

Title: Lomas Color Magic Redux

Size: USLetter	Date: 2024-06-08	**Rev: 1.1-003**
KiCad E.D.A. kicad (6.0.11-0)		Id: 1/7

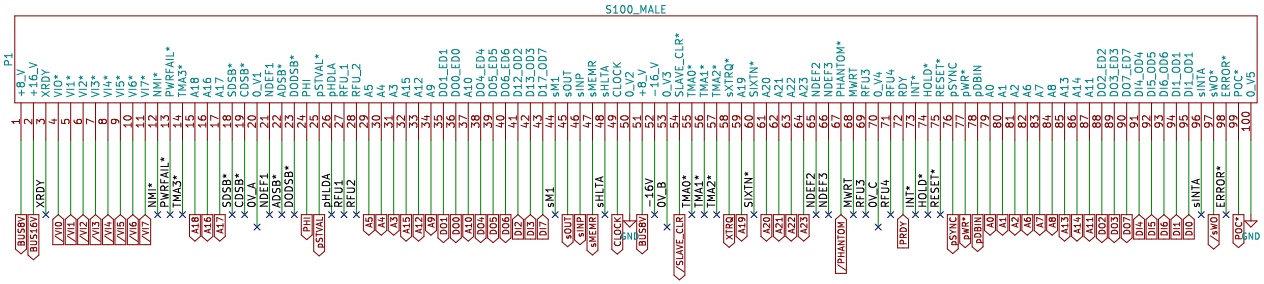

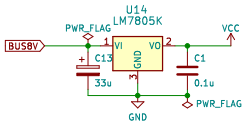

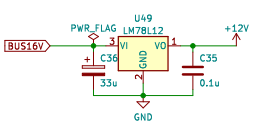

NOTE: Original board used adjustible regulators rather than fixed. So R19 (1.3k) and R20 (160) on the LM317(7812) is not used and R12 (470) and R13 (150) on the LM338 (7805K) is not used.

CARD EJECTOR HOLES

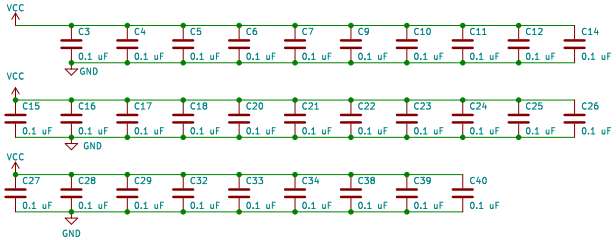

Schematic page 1A
Redraw/modifications (c) Richard A. Cini
Lomas Data Produtcs

Sheet: /Power_Buss_IF/
File: pwr_S100buss.kicad_sch

Title: Lomas Color Magic Redux

Size: B	Date: 2024-06-08	**Rev: 1.1-003**
KiCad E.D.A. kicad (6.0.11-0)		Id: 2/7

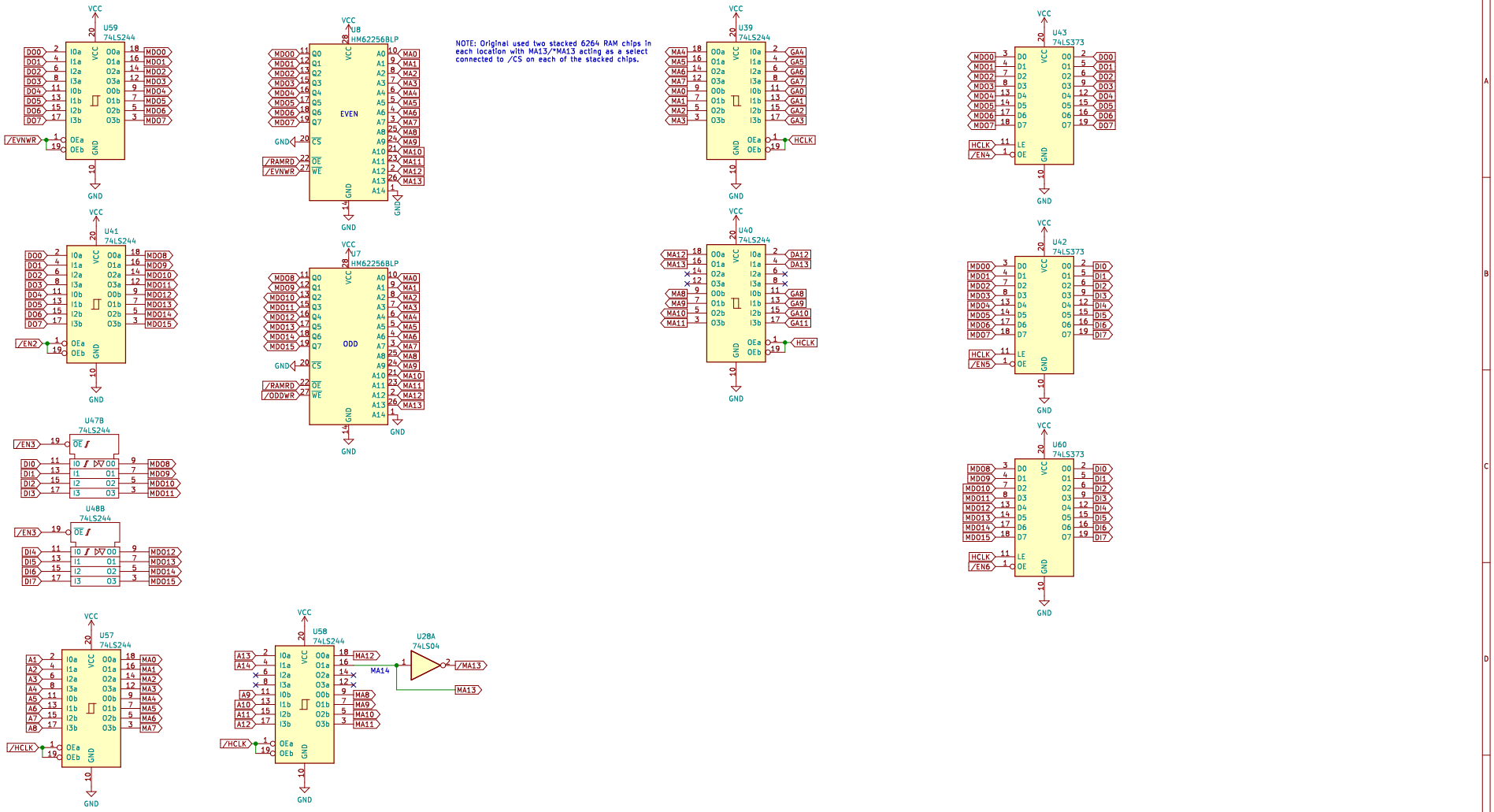

Schematic page 1A
Redraw/modifications (c) Richard A. Cini
Lomas Data Produtcs
Sheet: /Buffers_Memory/
File: buffmem.kicad_sch

Title: Lomas Color Magic Redux

Size: B	Date: 2024-06-08	**Rev: 1.1-003**
KiCad E.D.A. kicad (6.0.11-0)		Id: 3/7

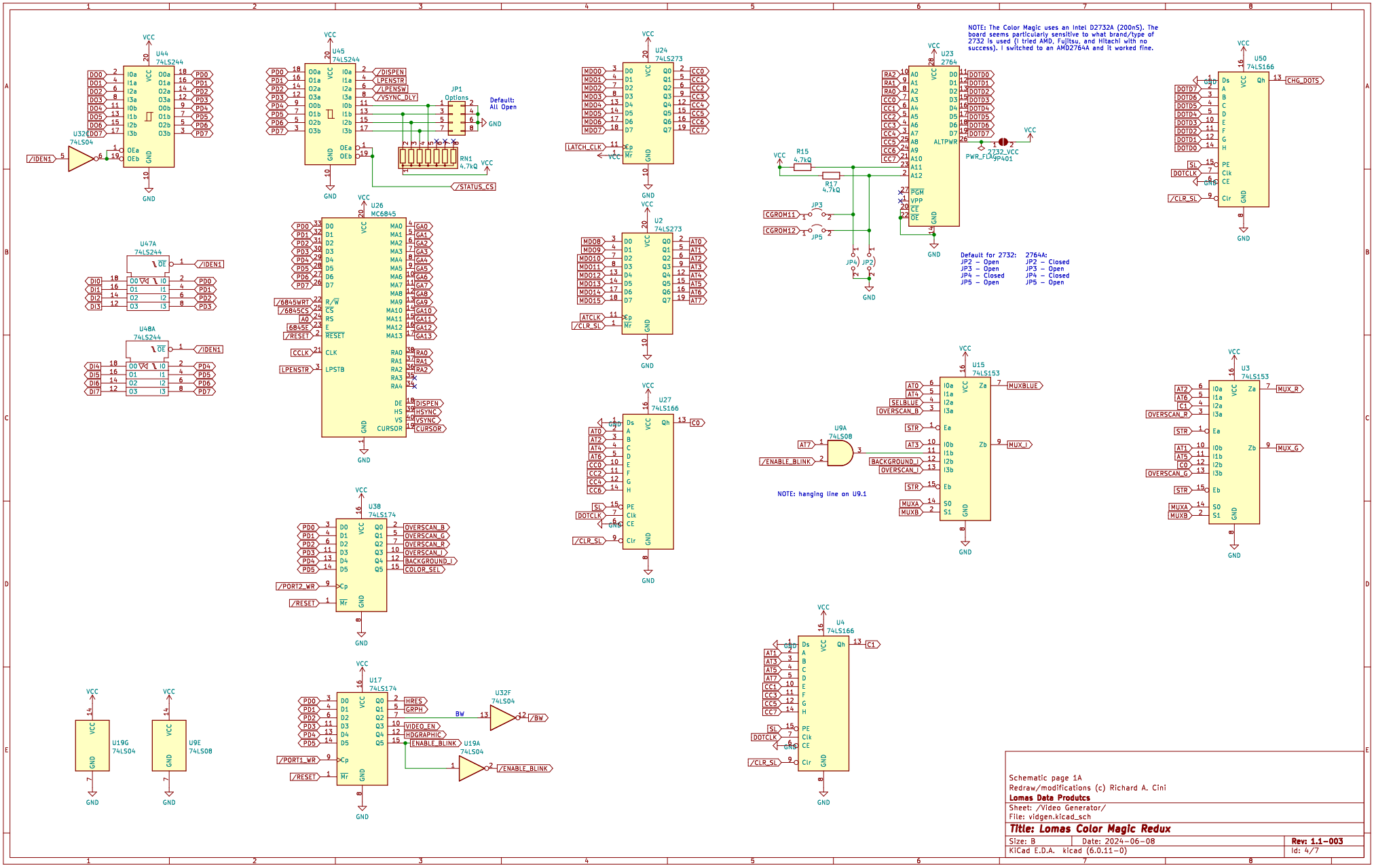
U44 74LS244
U32 74LS04
/IDEN1
U45 74LS244
/DISPEN
/LPENSTR
/LPENSW
/VSYNC_DLY
JP1 Options
Default: All Open
RN1 4.7kΩ
/STATUS_CS
U24 74LS273
LATCH_CLK
U23 2764
NOTE: The Color Magic uses an Intel D2732A (200nS). The board seems particularly sensitive to what brand/type of 2732 is used (I tried AMD, Fujitsu, and Hitachi with no success). I switched to an AMD2764A and it worked fine.
R15 4.7kΩ
R17 4.7kΩ
PWR_FLAG
JP401
2732_VCC
CGROM11
CGROM12
JP3
JP5
JP4
JP2
Default for 2732:
JP2 – Open
JP3 – Open
JP4 – Closed
JP5 – Open
2764A:
JP2 – Closed
JP3 – Open
JP4 – Closed
JP5 – Open
U50 74LS166
CHG_DOTS
DOTCLK
/CLR_SL
U47A 74LS244
U48A 74LS244
U26 MC6845
/6845WRT
/6845CS
/6845E
/RESET
CCLK
LPENSTR
DISPEN
HSYNC
VSYNC
CURSOR
U2 74LS273
ATCLK
U27 74LS166
U15 74LS153
U9A 74LS08
/ENABLE_BLINK
NOTE: hanging line on U9.1
MUXBLUE
MUX_I
MUX_R
MUX_G
U38 74LS174
/PORT2_WR
OVERSCAN_B
OVERSCAN_G
OVERSCAN_R
OVERSCAN_I
BACKGROUND_I
COLOR_SEL
U4 74LS166
U17 74LS174
/PORT1_WR
HRES
GRPH
VIDEO_EN
HDGRAPHIC
ENABLE_BLINK
BW
U32F 74LS04
/BW
U19A 74LS04
/ENABLE_BLINK
U19G 74LS04
U9E 74LS08
Schematic page 1A
Redraw/modifications (c) Richard A. Cini
Lomas Data Produtcs
Sheet: /Video Generator/
File: vidgen.kicad_sch
Title: Lomas Color Magic Redux
Size: B
Date: 2024-06-08
Rev: 1.1-003
KiCad E.D.A. kicad (6.0.11-0)
Id: 4/7

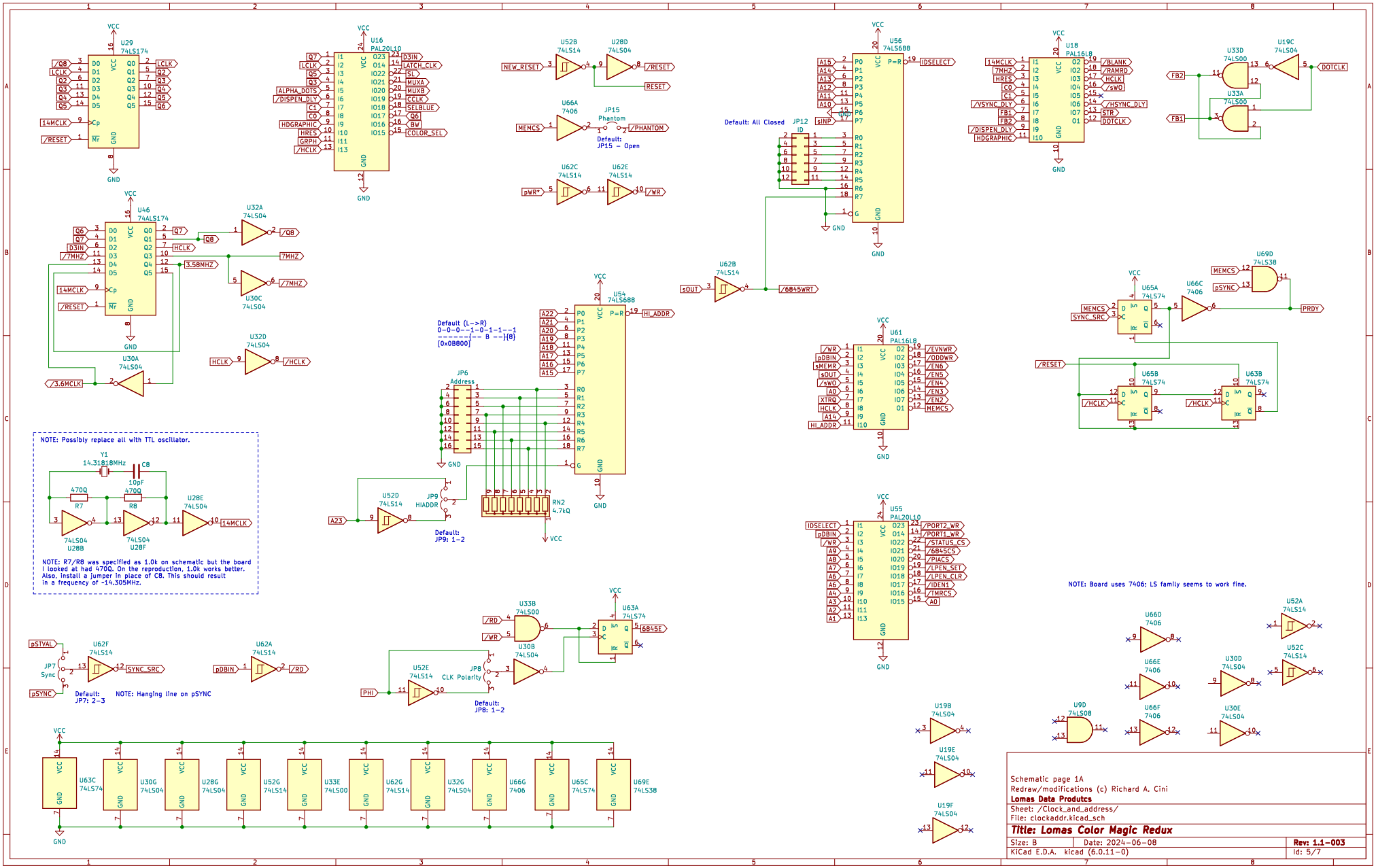

Schematic page 1A
Redraw/modifications (c) Richard A. Cini
Lomas Data Produtcs
Sheet: /Clock_and_address/
File: clockaddr.kicad_sch

Title: Lomas Color Magic Redux

Size: B	Date: 2024-06-08	**Rev: 1.1-003**
KiCad E.D.A. kicad (6.0.11-0)		Id: 5/7

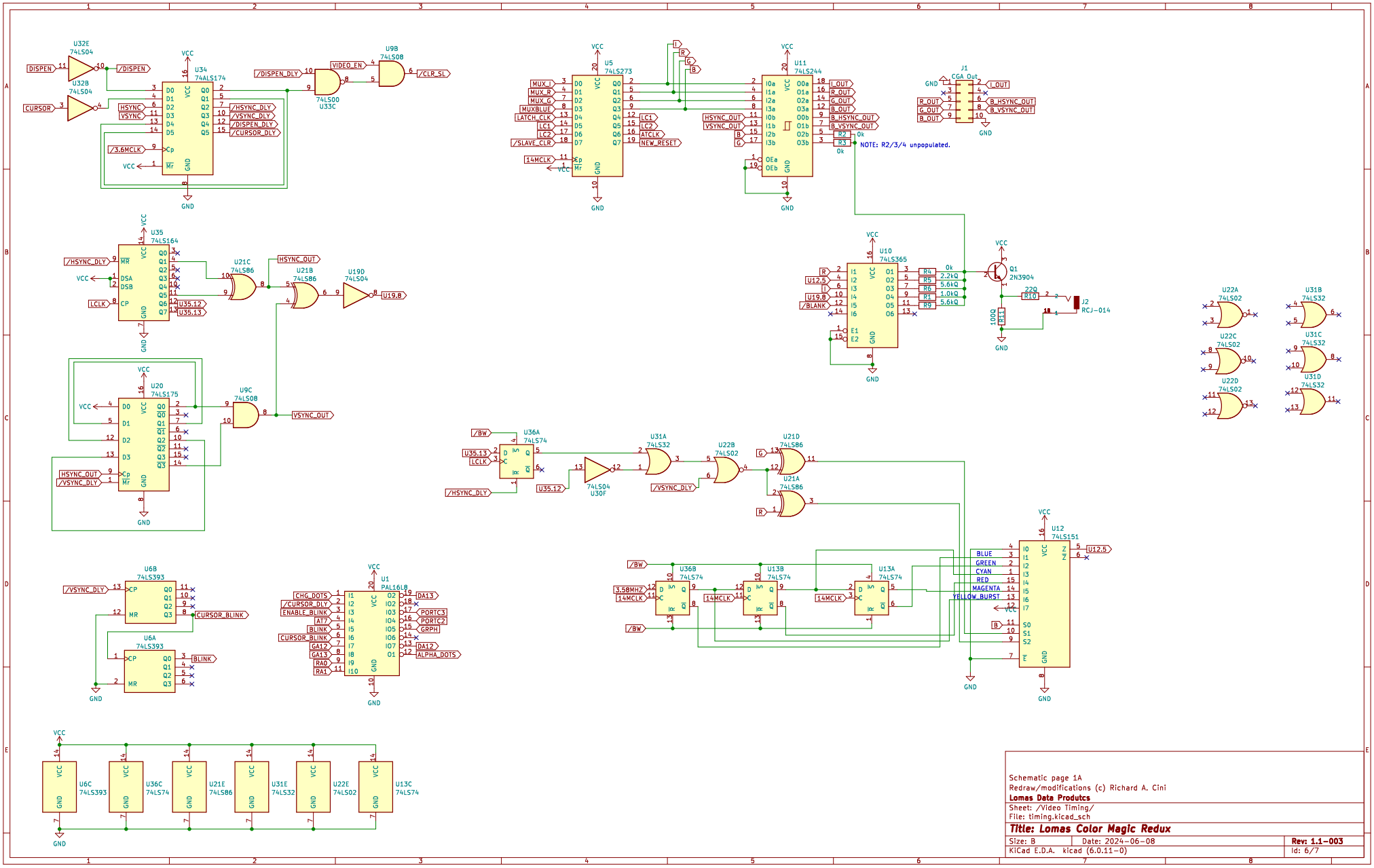

Schematic page 1A
Redraw/modifications (c) Richard A. Cini
Lomas Data Produtcs
Sheet: /Video Timing/
File: timing.kicad_sch

Title: Lomas Color Magic Redux

Size: B	Date: 2024-06-08	**Rev: 1.1-003**
KiCad E.D.A. kicad (6.0.11-0)		Id: 6/7

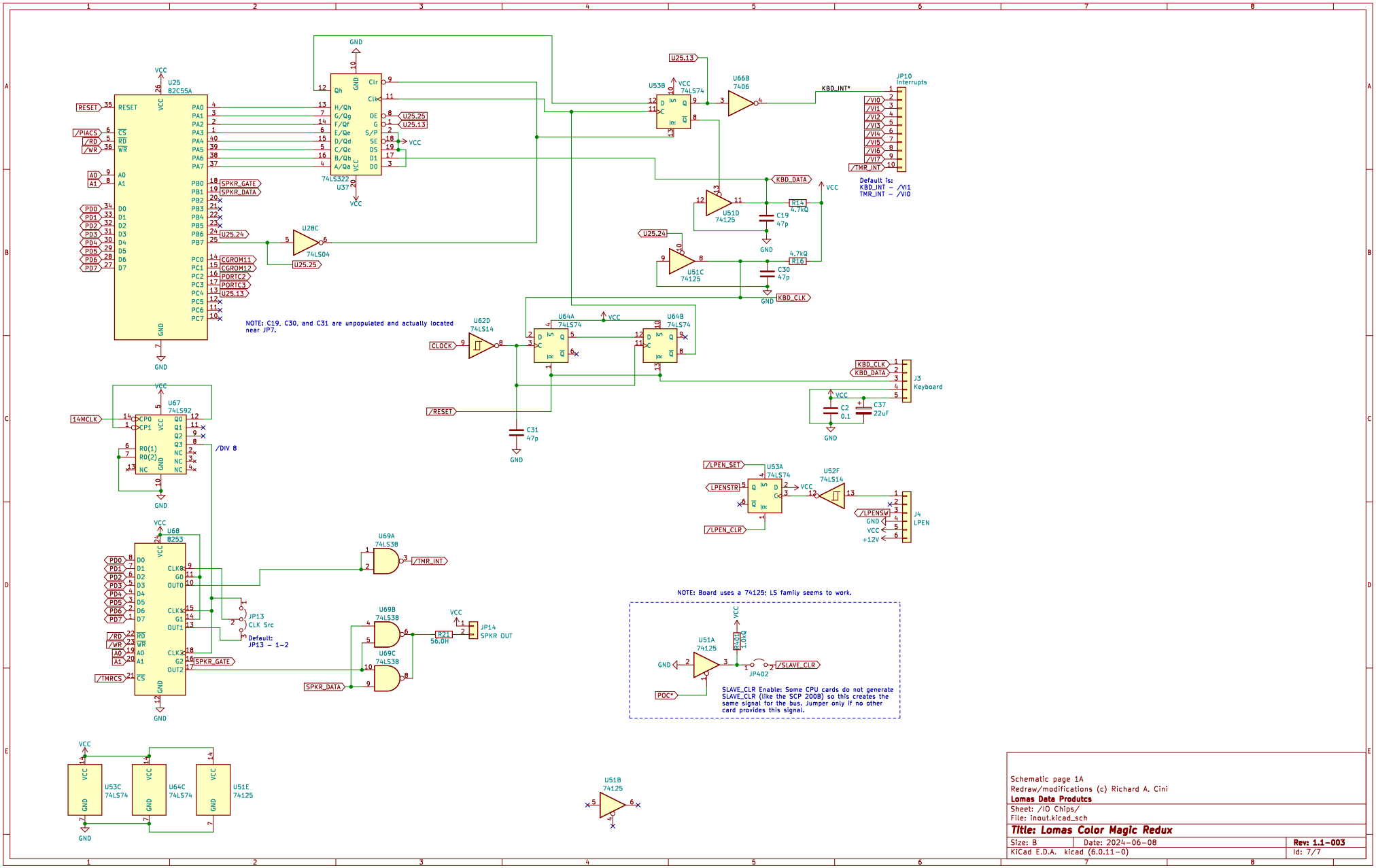

Schematic page 1A
Redraw/modifications (c) Richard A. Cini
Lomas Data Produtcs
Sheet: /IO Chips/
File: Inout.kicad_sch

Title: Lomas Color Magic Redux

Size: B	Date: 2024-06-08	Rev: 1.1-003
KiCad E.D.A. kicad (6.0.11-0)		Id: 7/7