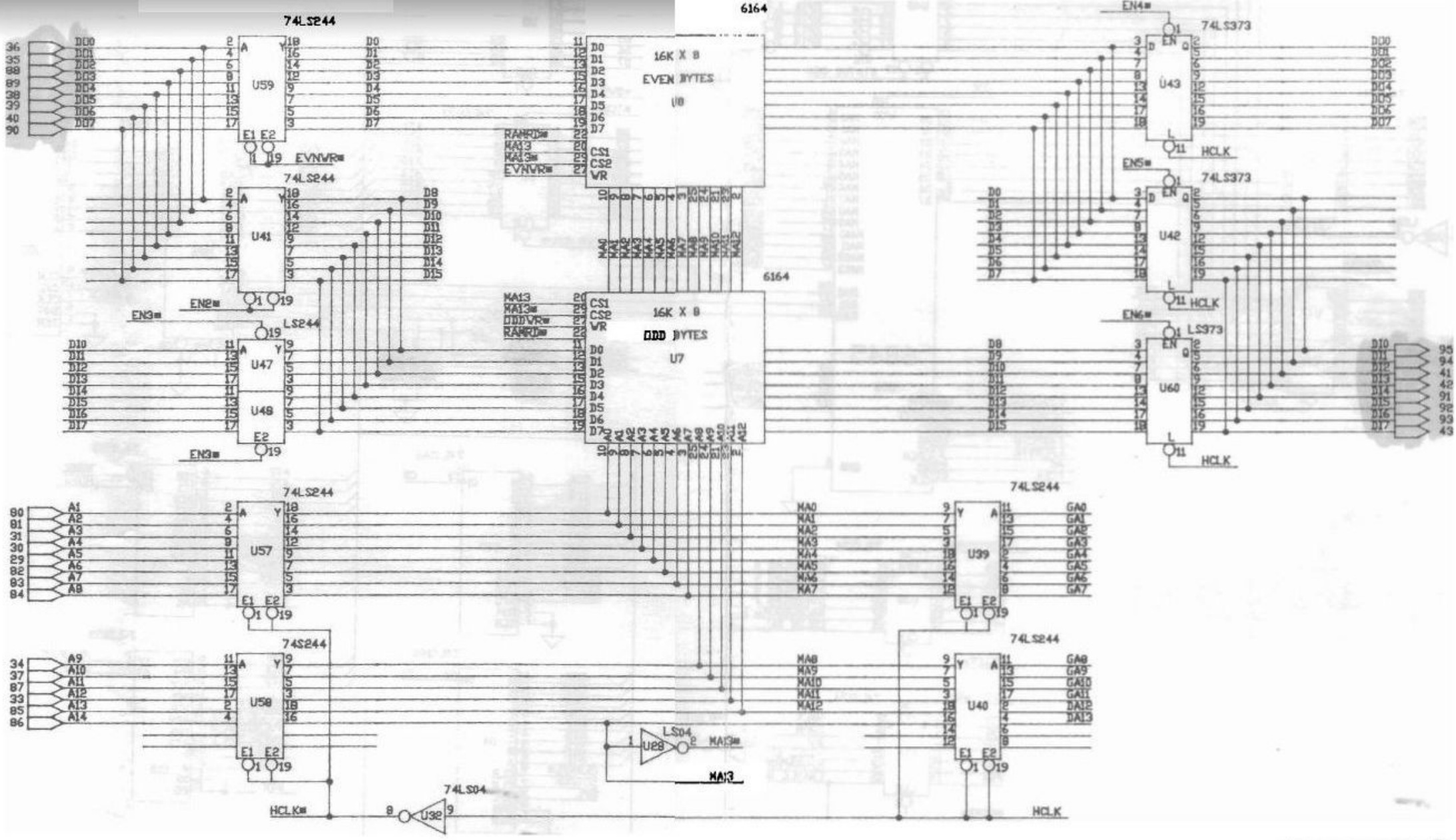

LOMAS DATA PRODUCTS, INC.

Color Magic

page 1

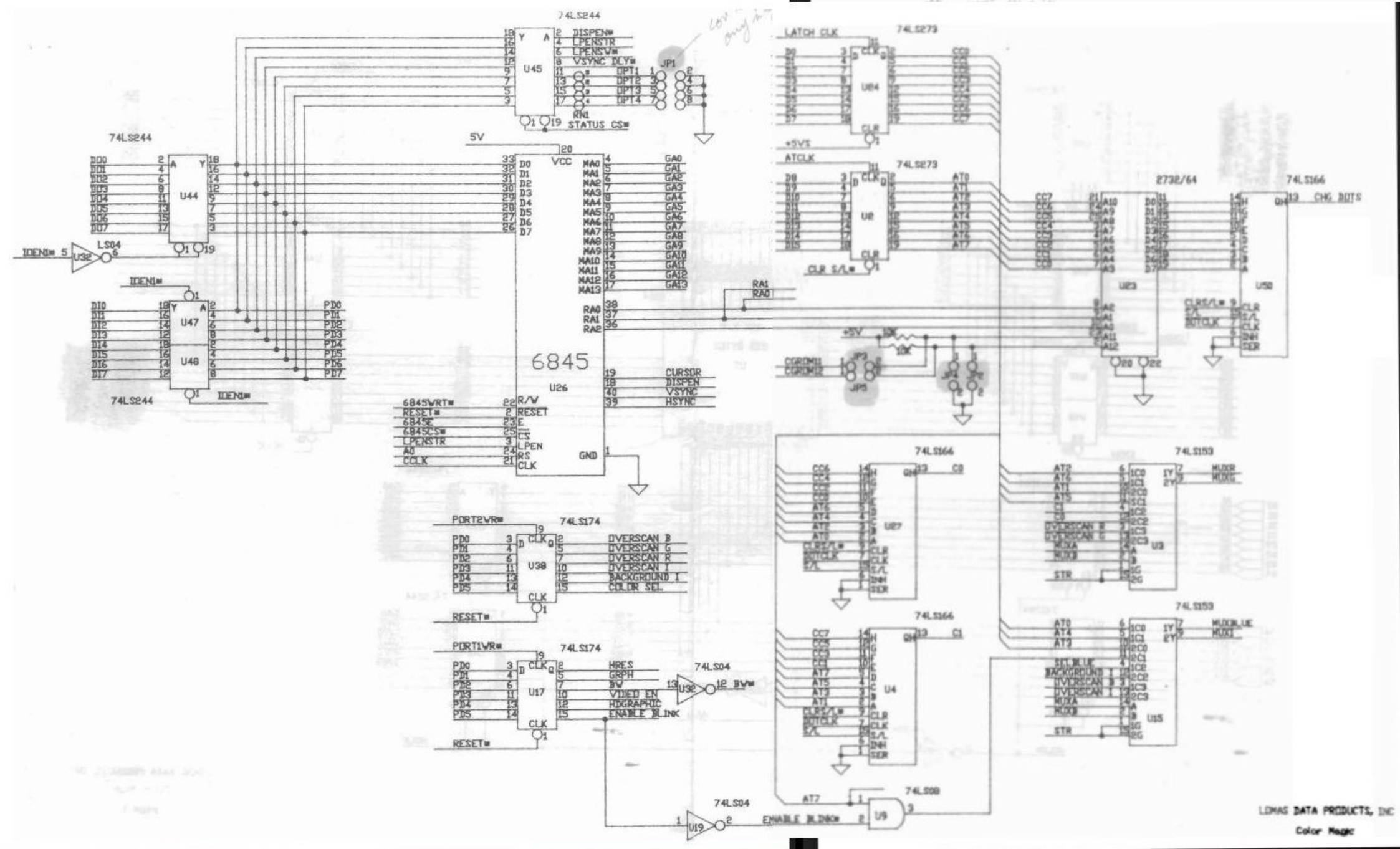
74LS244
U45
DISPENW
LPENSTR
LPENSW
VSYNC DLYW
DPT1
DPT2
DPT3
DPT4
RN1
STATUS CSW
JP1
74LS244
U44
IDENW
LS04
U32
IDENW
U47
U48
74LS244
5V
VCC
6845
U26
GND
6845WRTW
RESET
6845E
6845CSW
LPENSTR
A0
CCLK
R/W
RESET
E
CS
LPEN
RS
CLK
CURSOR
DISPEN
VSYNC
HSYNC
RA1
RA0
LATCH CLK
74LS273
U84
+5V
ATCLK
74LS273
U8
CLR S/LW
2732/64
U23
74LS166
U50
CHG DOTS
CGROM1
CGROM2
JP3
JP5
JP4
JP2
74LS164
U27
74LS164
U4
74LS153
U3
74LS153
U5
PORT2WRW
74LS174
U38
OVERSCAN B
OVERSCAN G
OVERSCAN R
OVERSCAN I
BACKGROUND I
COLOR SEL
RESET
PORT1WRW
74LS174
U17
HRES
GRPH
BV
VIDEO EN
HOGRAPHIC
ENABLE BLINK
74LS04
U32
BVW
74LS04
U19
ENABLE BLINKW
74LS08
U9
LEMAS DATA PRODUCTS, INC
Color Magic

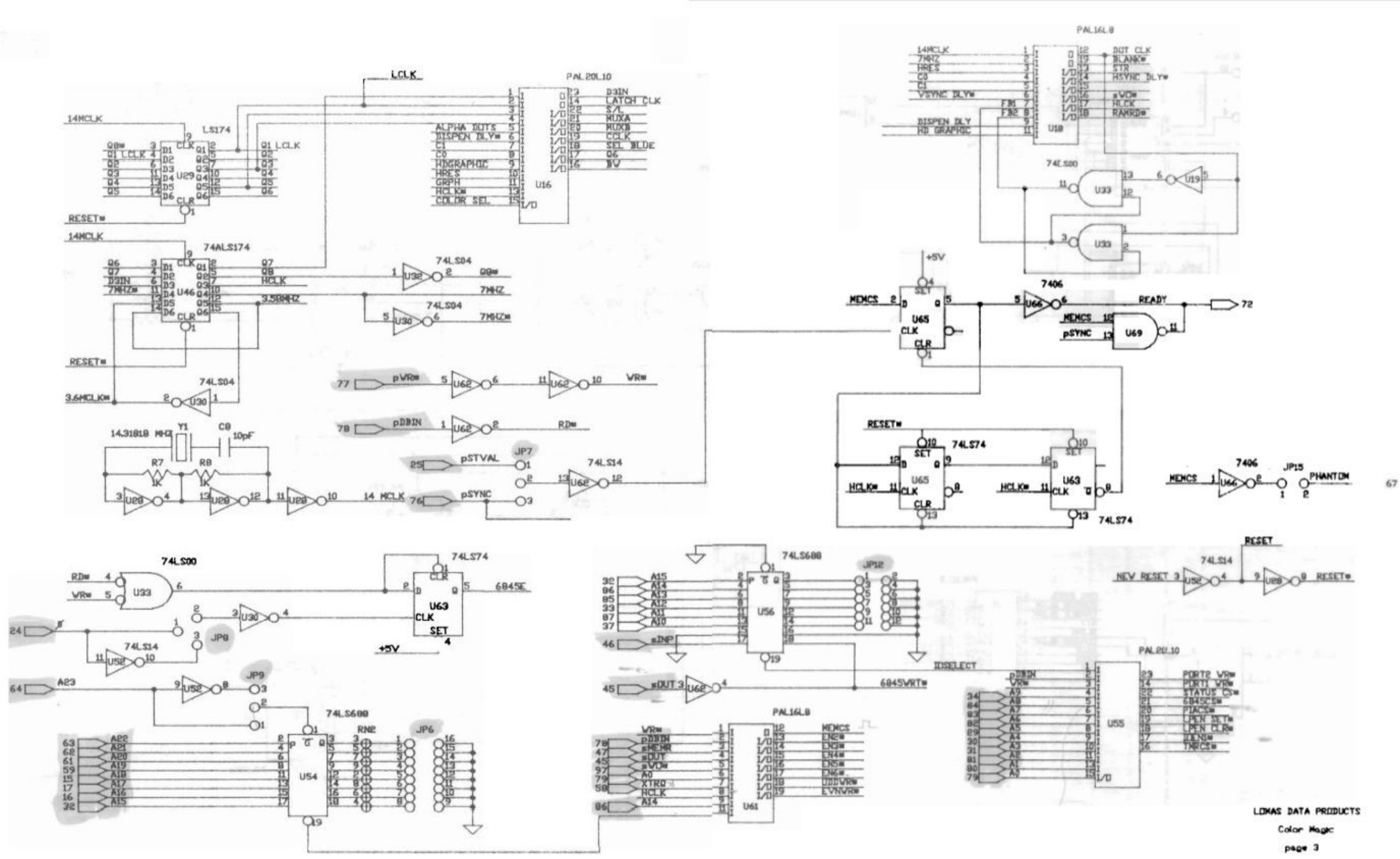

LOMAS DATA PRODUCTS

Color Magic

page 3

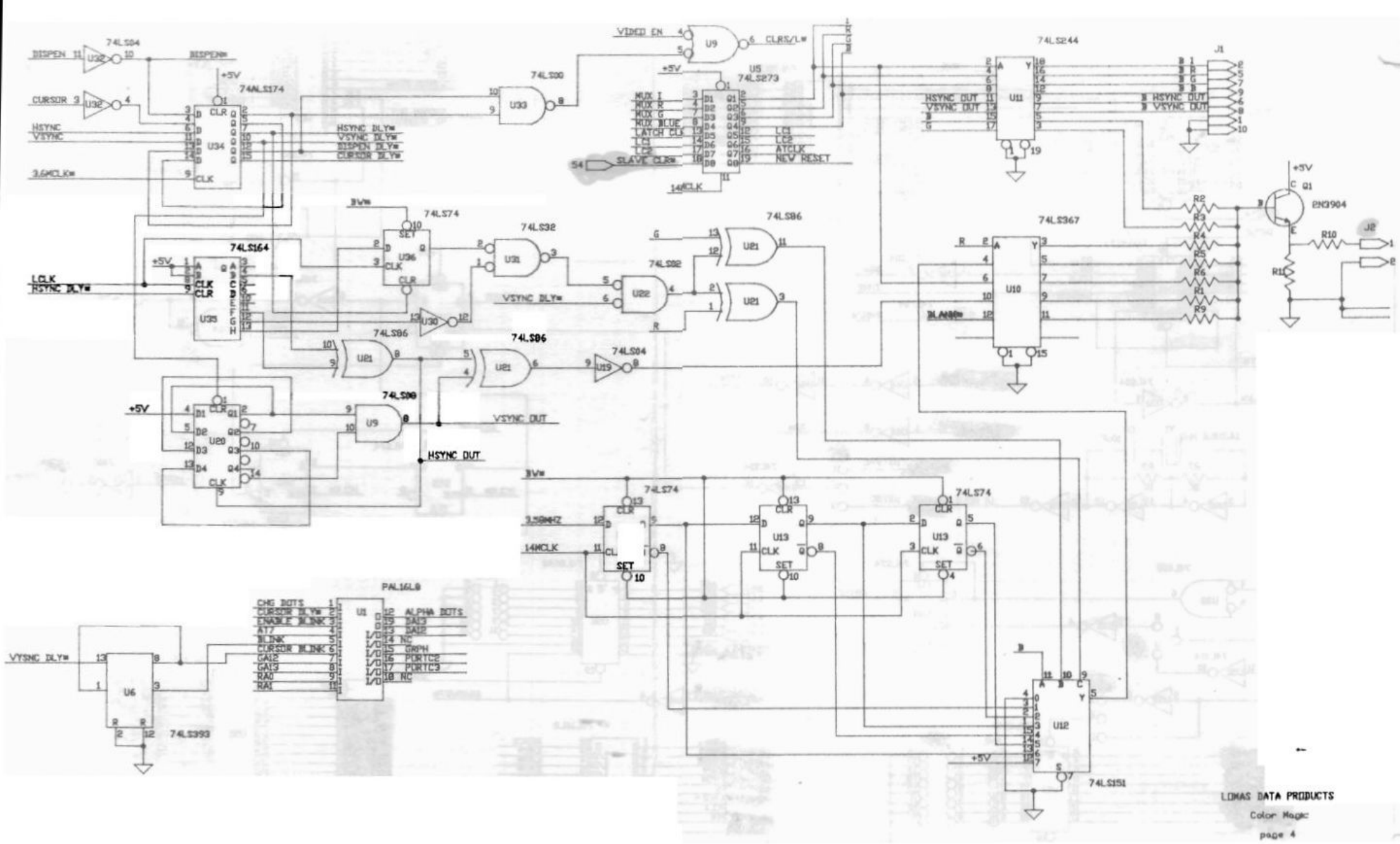

LOMAS DATA PRODUCTS

Color Magic

page 4

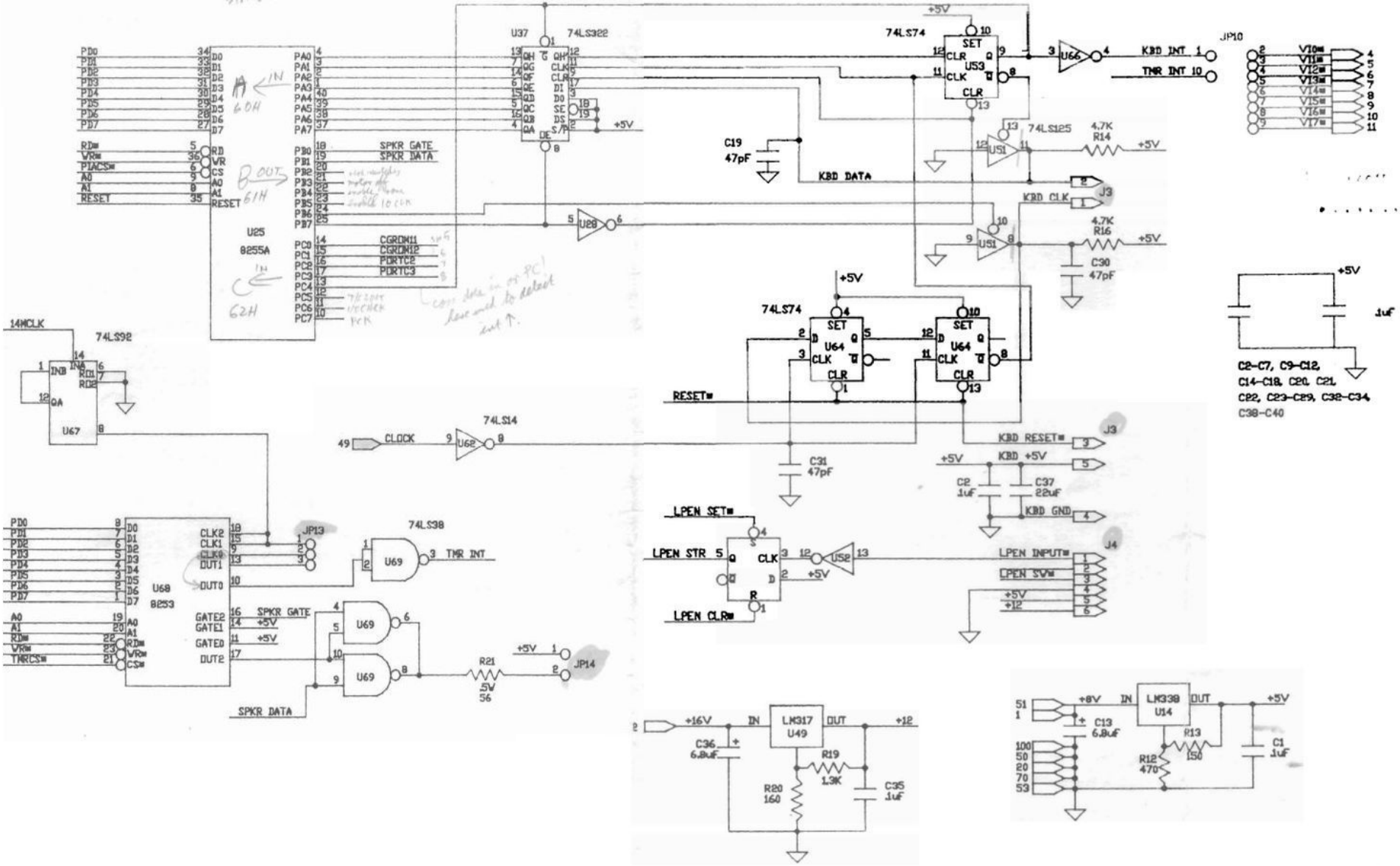

LOMAS DATA PRODUCTS

Color Magic

page 5