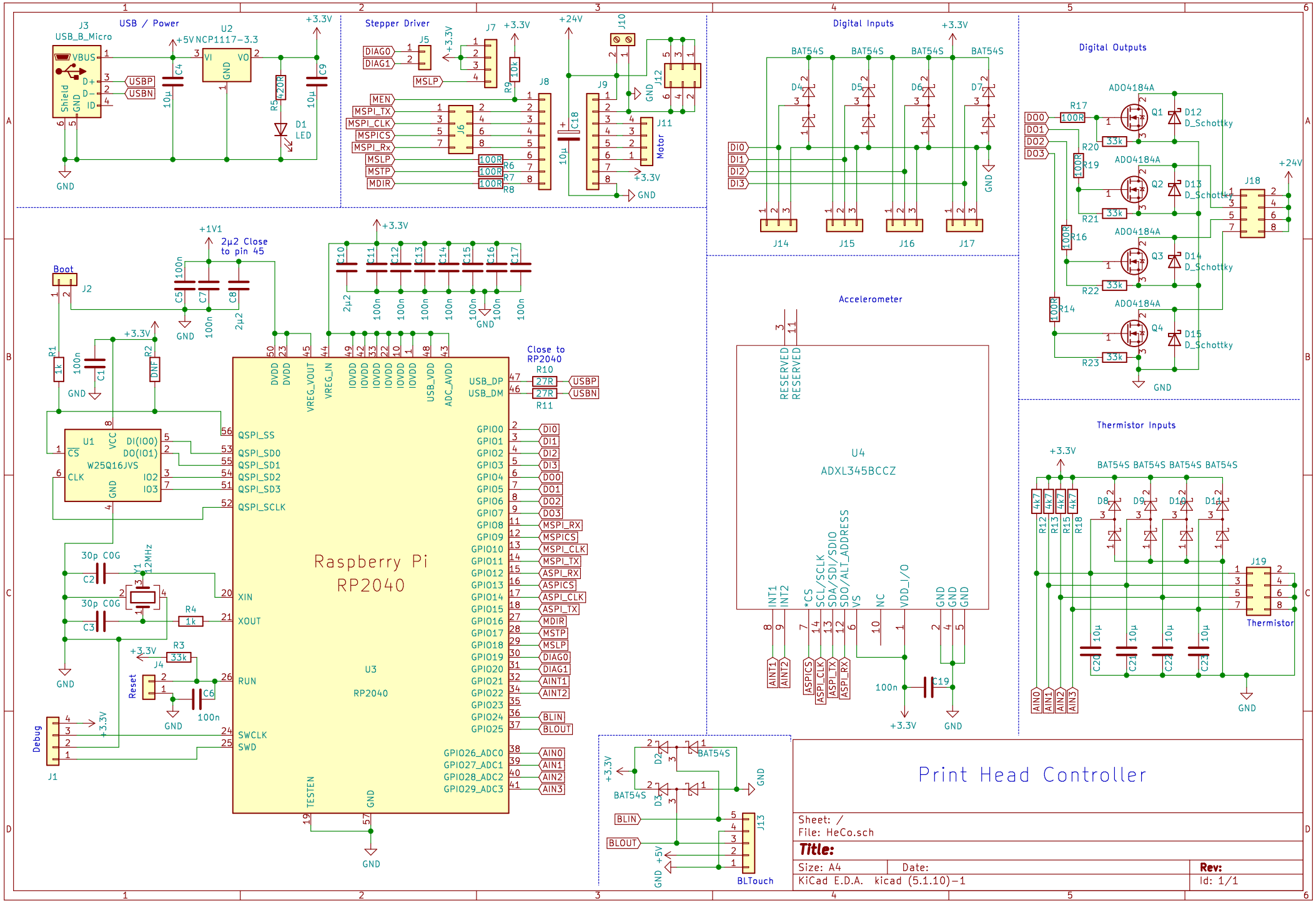
USB / Power
J3
USB_B_Micro
U2
NCP1117-3.3
+5V
+3.3V
USBP
USBN
C4
10µ
C9
10µ
R5
420R
D1
LED
GND
Stepper Driver
J5
DIAG0
DIAG1
J7
MSLP
R9
10k
J8
MEN
MSPI_TX
MSPI_CLK
MSPICS
MSPI_Rx
MSLP
MSTP
MDIR
J6
R6
R7
R8
100R
+24V
J10
J9
J12
J11
Motor
C18
10µ
Digital Inputs
BAT54S
D4
D5
D6
D7
DI0
DI1
DI2
DI3
J14
J15
J16
J17
Digital Outputs
ADO4184A
Q1
Q2
Q3
Q4
D12
D13
D14
D15
D_Schottky
R17
R20
R19
R21
R16
R22
R14
R23
100R
33k
DO0
DO1
DO2
DO3
J18
Boot
J2
+1V1
2µ2 Close to pin 45
C5
C7
C8
100n
2µ2
C10
C11
C12
C13
C14
C15
C16
C17
R1
1k
C1
R2
DNF
U1
W25Q16JVS
CS
CLK
DI(IO0)
DO(IO1)
IO2
IO3
VCC
GND
Close to RP2040
R10
R11
27R
USB_DP
USB_DM
Raspberry Pi
RP2040
U3
QSPI_SS
QSPI_SD0
QSPI_SD1
QSPI_SD2
QSPI_SD3
QSPI_SCLK
XIN
XOUT
RUN
SWCLK
SWD
TESTEN
DVDD
VREG_VOUT
VREG_IN
IOVDD
USB_VDD
ADC_AVDD
GPIO0
GPIO1
GPIO2
GPIO3
GPIO4
GPIO5
GPIO6
GPIO7
GPIO8
GPIO9
GPIO10
GPIO11
GPIO12
GPIO13
GPIO14
GPIO15
GPIO16
GPIO17
GPIO18
GPIO19
GPIO20
GPIO21
GPIO22
GPIO23
GPIO24
GPIO25
GPIO26_ADC0
GPIO27_ADC1
GPIO28_ADC2
GPIO29_ADC3
ASPI_RX
ASPICS
ASPI_CLK
ASPI_TX
DIAG0
DIAG1
AINT1
AINT2
BLIN
BLOUT
AIN0
AIN1
AIN2
AIN3
30p C0G
C2
C3
Y1
12MHz
R4
1k
R3
33k
J4
Reset
C6
100n
Debug
J1
Accelerometer
U4
ADXL345BCCZ
RESERVED
INT1
INT2
*CS
SCL/SCLK
SDA/SDI/SDIO
SDO/ALT_ADDRESS
VS
NC
VDD_I/O
C19
Thermistor Inputs
R12
R13
R15
R18
4k7
D8
D9
D10
D11
J19
Thermistor
C20
C21
C22
C23
BLTouch
J13
D2
D3
+5V
Print Head Controller
Sheet: /
File: HeCo.sch
Title:
Size: A4
Date:
Rev:
KiCad E.D.A. kicad (5.1.10)-1
Id: 1/1