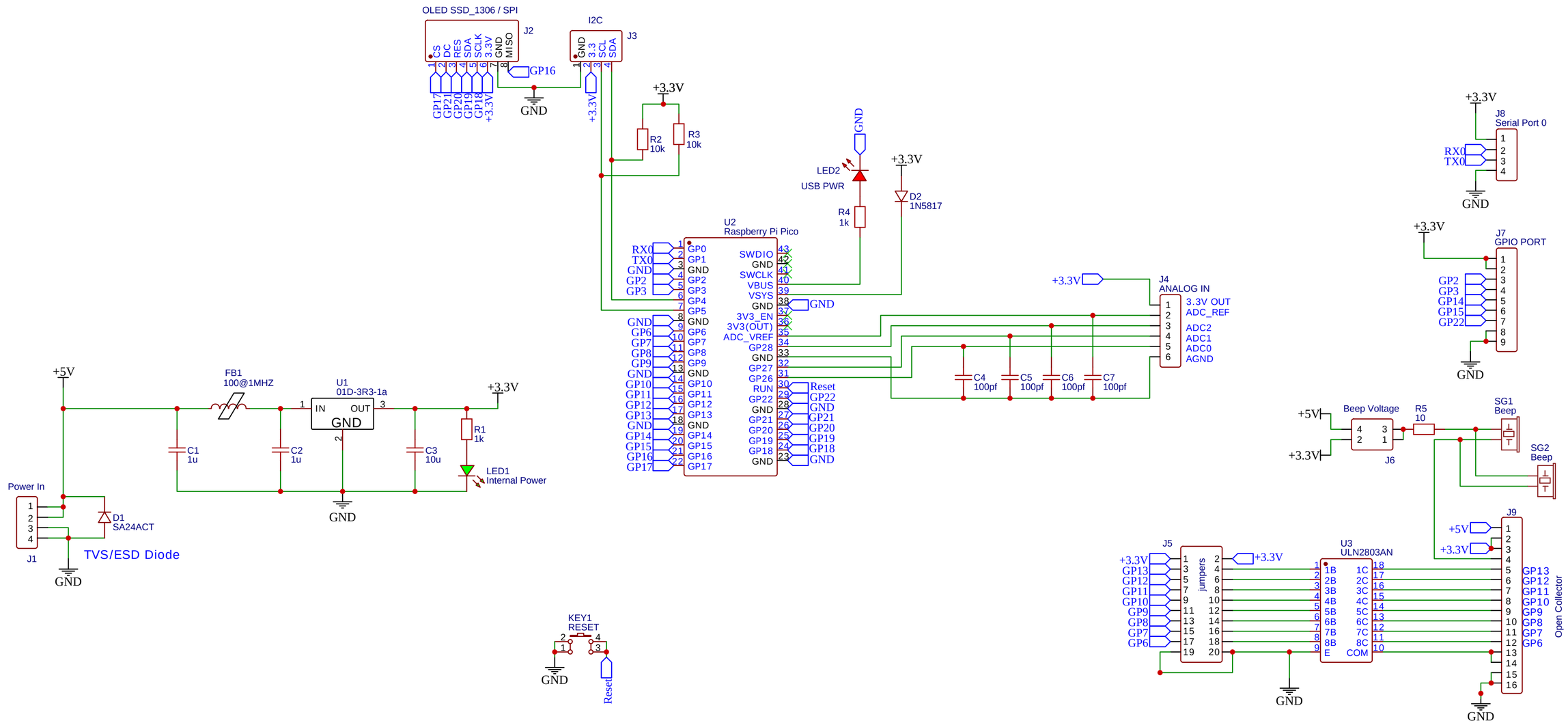

TITLE: Pico breakout Proto Board	REV: 3.0
Company: CISG	Sheet: 1/1
Date: 2022-04-18 Drawn By: Richard Spagnola	

EasyEDA