No.	REV
003-1051	5

REVISIONS

ZONE	REV	DESCRIPTION	DATE	APPROVED
	3	ADDED MPU BD AND MIL CONN.	9/2/05	
	4	CONN WIRING CHG ON 1300 CONNS	9/27/05	
B,7	5	WIRING CHG ON META DATA SWITCH	3/1/06	

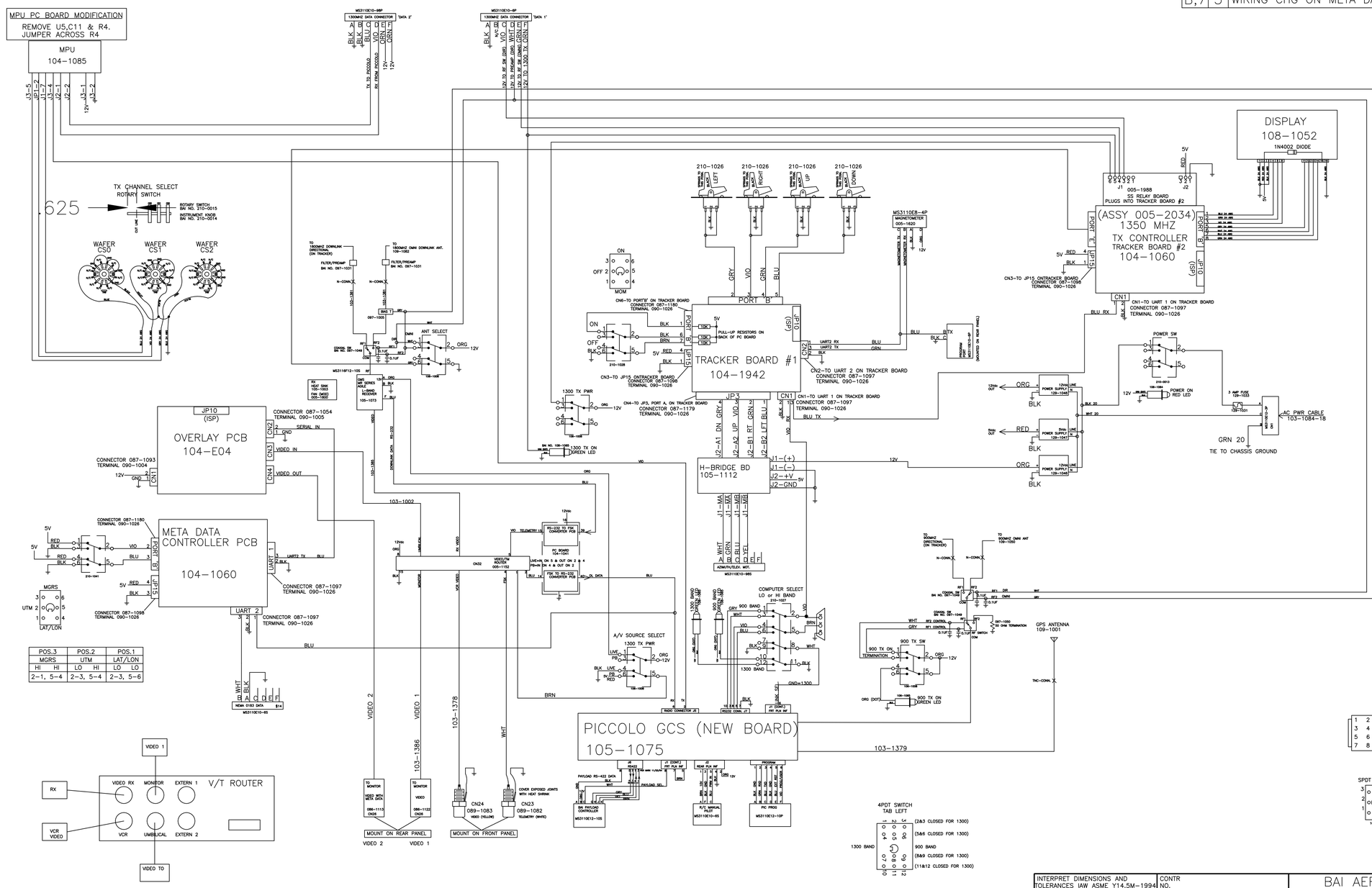

POS.3	POS.2	POS.1
MGRS	UTM	LAT/LON
HI HI	LO HI	LO LO
2-1, 5-4	2-3, 5-4	2-3, 5-6

INTERPRET DIMENSIONS AND TOLERANCES IAW ASME Y14.5M-1994 UNLESS OTHERWISE SPECIFIED. DIMENSIONS ARE IN INCHES, DO NOT SCALE.

TOLERANCES:

2 PLACE	3 PLACE	ANGLES
±.01	±.005	±0.5°

THIRD ANGLE PROJECTION

CONTR NO.

DATE 3/1/06

DRAWN BY: R. BINAS

CHECKED BY:

APPROVED BY

BAI AEROSYSTEMS, INC.
9040 GLEBE PARK RD., P.O. BOX 1600
EASTON, MARYLAND 21601
PH: 410/820-7500
FAX 410/820-8500

DRAWING NAME
BLOCK DIAGRAM
PICCOLO GCS GEN 4

SIZE	CAGE CODE	No.
D	0A9N8	003-1051

SCALE NTS | SHEET 1 OF 1 | REV 5