NEXT HIGHER ASSEMBLY	
ASSEMBLY NO.	ASSEMBLY NAME
-	-

NOTES:

1- CUT ITEM ON WATERJET USING DXF FILE 16M-1008-01_SHEET_METAL_BOX _AVIONICS.
2- MATERIAL: ALUMINUM ALLOY 5052-H32 PER ASTM-B209, .1MM THICK OR EQUIVALENT.
3- UNLESS OTHERWISE SPECIFIED ALL DIMENSIONS ARE IN MILIMETERS TOLERANCE +/- 1MM
4- FINISH: POWDER COAT :COLOR: "LIGHT GRAY" #26373 PER FED-STD-595. INSIDE AND OUTSIDE OF UNIT.
5- WELD ALL CORNERS AFTER BENDING.
6- INSTALL HARDWARE (PEM NUTS, PRESS INSERTS)

REVISION TABLE

ZONE	REV	DESCRIPTION	DATE	APPROVED
-	1	RELEASE FOR PROTOTYPE	02-09-24	XX-XX-XX

CUT AND BEND(BEND DIMENSIONS ARE SHOWN)

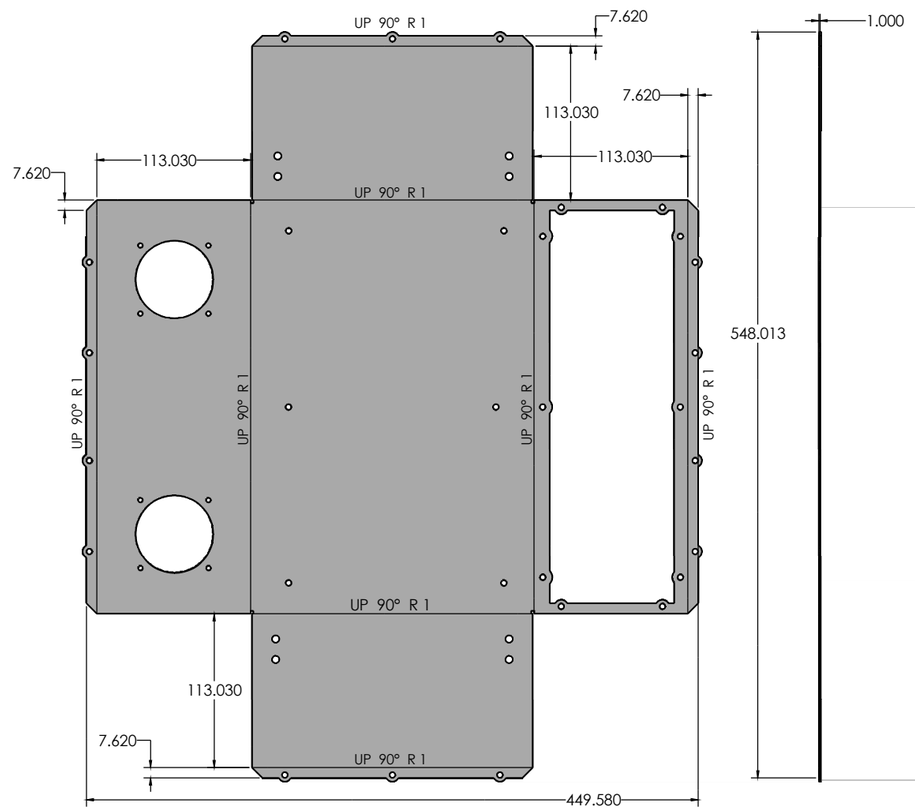

WELD ALL OPEN SEAMS

4X WELD ALONG ALL OPEN SEAMS

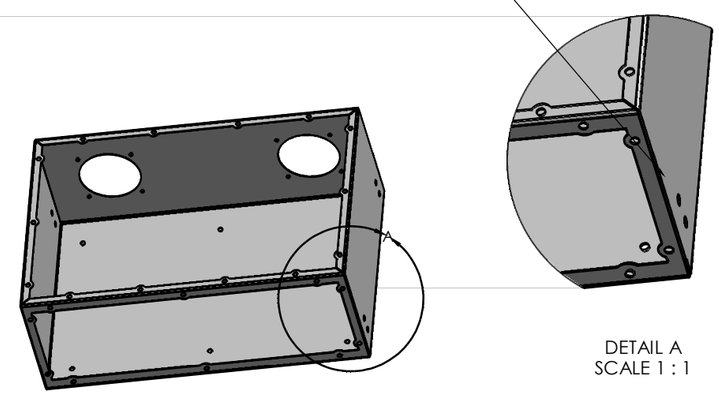

DETAIL A
SCALE 1 : 1

PROPRIETARY AND CONFIDENTIAL
THE INFORMATION CONTAINED IN THIS DRAWING IS THE SOLE PROPERTY OF EQUINOX INNOVATIVE SYSTEMS, INC. ANY REPRODUCTION OF THIS IN PART OR IN WHOLE WITHOUT THE WRITTEN PERMISSION OF EQUINOX INNOVATIVE SYSTEMS, INC. IS PROHIBITED.

INTERNATIONAL TRADE IN ARMS REGULATIONS - THIS DOCUMENT CONTAINS TECHNICAL DATA WHOSE EXPORT IS RESTRICTED BY THE ARMS EXPORT CONTROL ACT (TITLE 22, U.S.C., SEC 2751, ET SEQ.) OR THE EXPORT ADMINISTRATION ACT OF 1979 (TITLE 50, U.S.C., APP. 2401 ET SEQ.), AS AMENDED. VIOLATIONS OF THESE EXPORT LAWS ARE SUBJECT TO SEVERE CRIMINAL PENALTIES. DISSEMINATE IN ACCORDANCE WITH PROVISIONS OF DOD DIRECTIVE 5230.25.

USED ON

APPLICATION

THIRD ANGLE PROJECTION IN ACCORDANCE WITH EQUINOX STANDARDS/ ASME Y14.5

UNLESS OTHERWISE SPECIFIED:
DIMENSIONS ARE IN MM
TOLERANCES:
ANGULAR +/- 5 BEND +/- 7.65
TWO PLACE DECIMAL +/- .250
THREE PLACE DECIMAL +/- .125

REV C:2023-09-02

APROVAL CHAIN		
	INITIALS	DATE
DWG DRAFTER:	RGB	02-09-24
CHECKER:		
ENG. APPR:		

EQUINOX INNOVATIVE SYSTEMS
8901 HERRMANN DR SUITE C, COLUMBIA, MD 21045
PHONE: 443-456-4036 INFO:https://equinoxinnovativesystems.com

TITLE: AVIONICS BOX

SIZE	DRAWING. NO.	REV
D	16M-1008-01	1

CAGE CODE:		
7PY27	SCALE: NTS	SHEET 1 OF 2