Boolean Logic – Introduction to Computer (計算機概論)

Winston H. Hsu (徐宏民)
National Taiwan University, Taipei

September 19/26, 2022

Office: R512, CSIE Building
Communication and Multimedia Lab (通訊與多媒體實驗室)
http://winstonhsu.info

Some of the slides are mainly from the reference

Topics

- Introduction
- Boolean Equations
- Boolean Algebra
- From Logic to Gates
- Multilevel Combinational Logic
- Karnaugh Maps
- Combinational Building Blocks

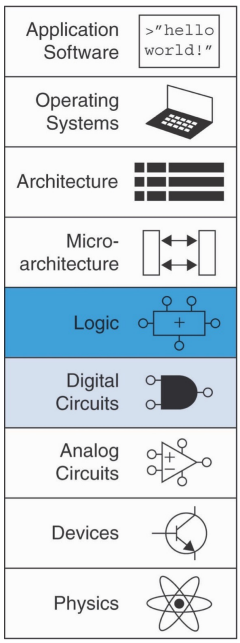

How Computer Operates?

```
if t>0 then
  a = a + 1
else

end
```

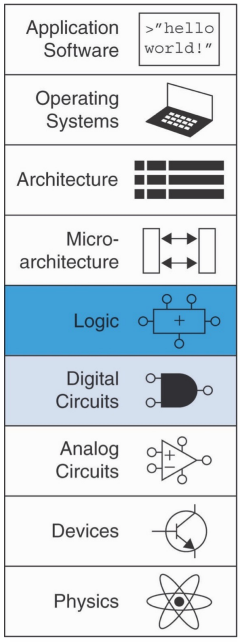

Introduction

- A logic circuit, processing discrete-valued variables, is composed of:
  - Inputs
  - Outputs
  - Functional specification
    - relationship between inputs and outputs
  - Timing specification:
    - delay between inputs changing and outputs responding

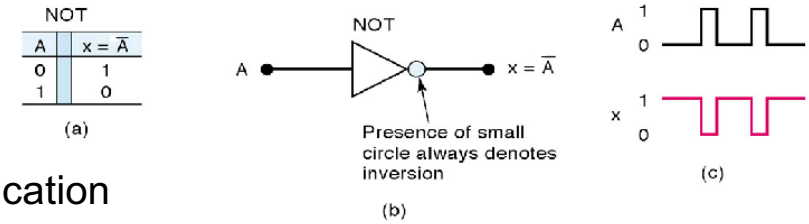

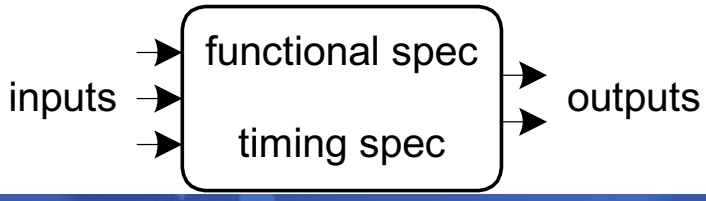

Circuits

- Nodes
  - Inputs: *A*, *B*, *C*
  - Outputs: *Y*, *Z*
  - Internal: n1
- Circuit elements
  - E1, E2, E3
  - Each a circuit

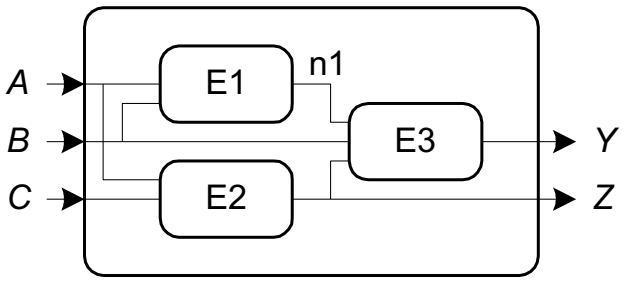

Types of Logic Circuits

- Combinational Logic
  - Memoryless
  - Outputs determined by current values of inputs
- Sequential Logic
  - Has memory
  - Outputs determined by previous and current values of inputs

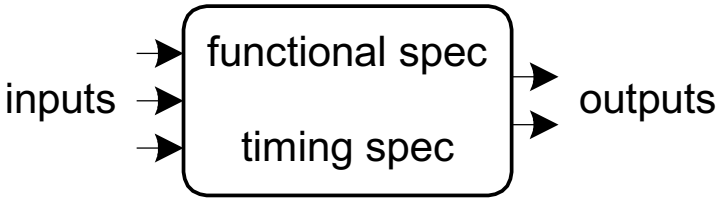

Rules of Combinational Composition

- Every element is combinational
- Every node is either an input or connects to *exactly one* output
- The circuit contains no cyclic paths
- Example:

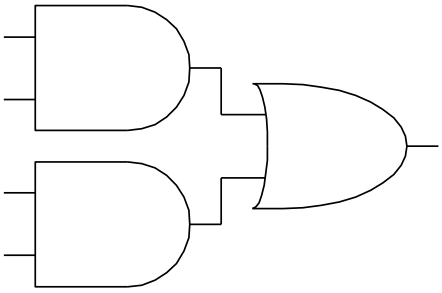

Rules of Combinational Composition (More Examples)

- Every element is combinational
- Every node is either an input or connects to *exactly one* output
- The circuit contains no cyclic paths

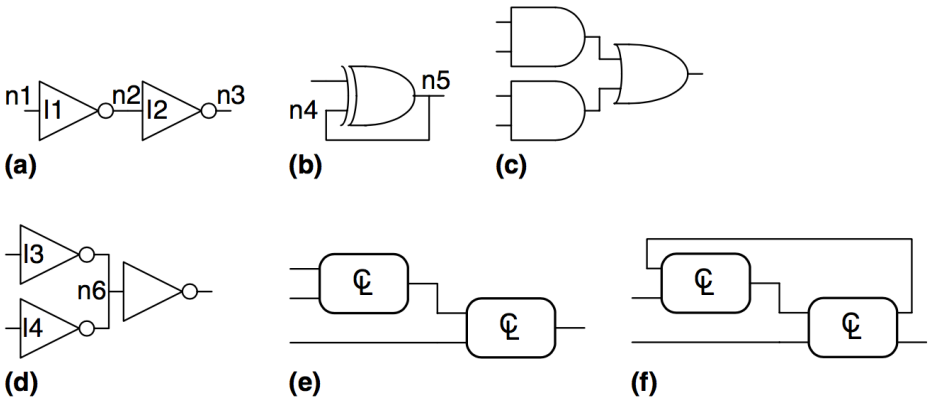

Boolean Equations

- Functional specification of outputs in terms of inputs
- Example: $S = F(A, B, C_{in})$

$$C_{out} = F(A, B, C_{in})$$

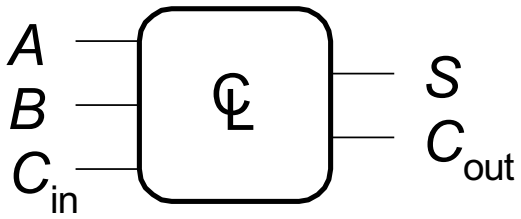

$$S = A \oplus B \oplus C_{in}$$
$$C_{out} = AB + AC_{in} + BC_{in}$$

Truth Table

- A truth table is a chart of 1s and 0s arranged to indicate the results (or outputs) of all possible inputs

(inputs) (outputs)

all possible states

A	B	C	Y
0	0	0	0
0	0	1	0
0	1	0	0
0	1	1	1
1	0	0	1
1	0	1	0
1	1	0	0
1	1	1	1

Determining Output Level From a Diagram

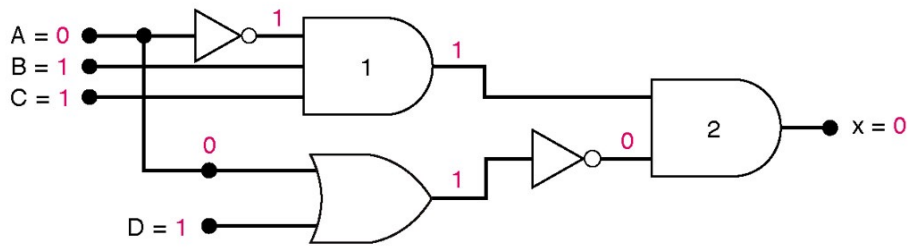

Some Definitions

- Complement: variable with a bar over it

  $\overline{A}$, $\overline{B}$, $\overline{C}$
- Literal: variable or its complement

  A, $\overline{A}$, B, $\overline{B}$, C, $\overline{C}$
- Implicant: product of literals

  $AB\overline{C}$, $\overline{A}C$, BC
- Minterm: product that includes <u>all</u> input variables

  $AB\overline{C}$, $A\overline{B}\overline{C}$, ABC
- Maxterm: sum that includes <u>all</u> input variables

  $(A+\overline{B}+C)$, $(\overline{A}+B+\overline{C})$, $(\overline{A}+\overline{B}+C)$

Precedence: NOT > AND > OR

Universality of NAND (also NOR) Gates

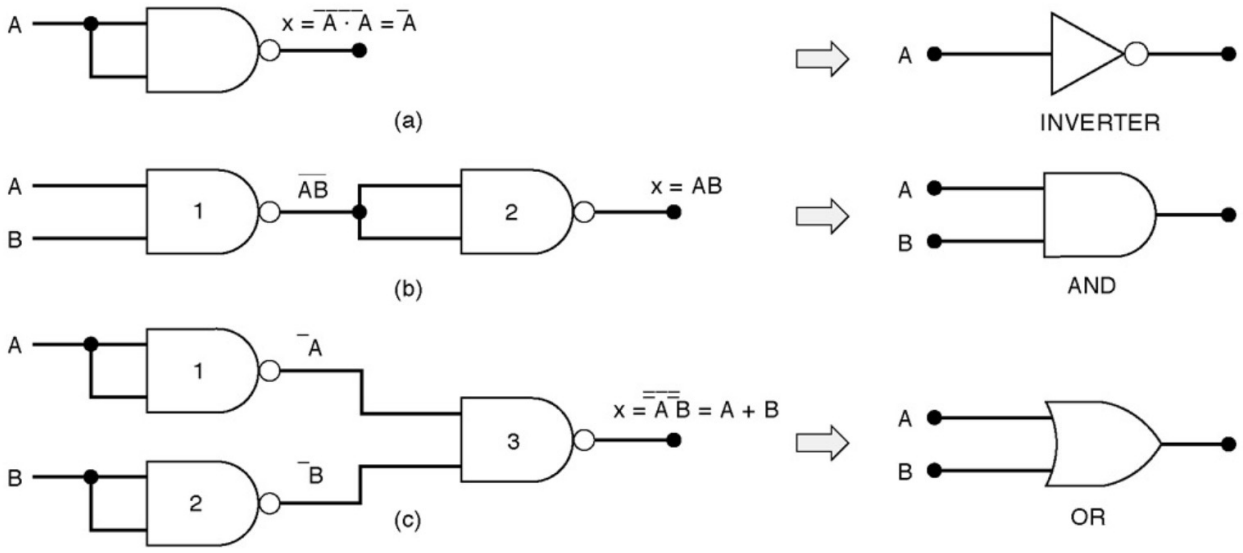

For implementation matter, NAND is more cost-effective

Universality of NAND (also NOR) Gates

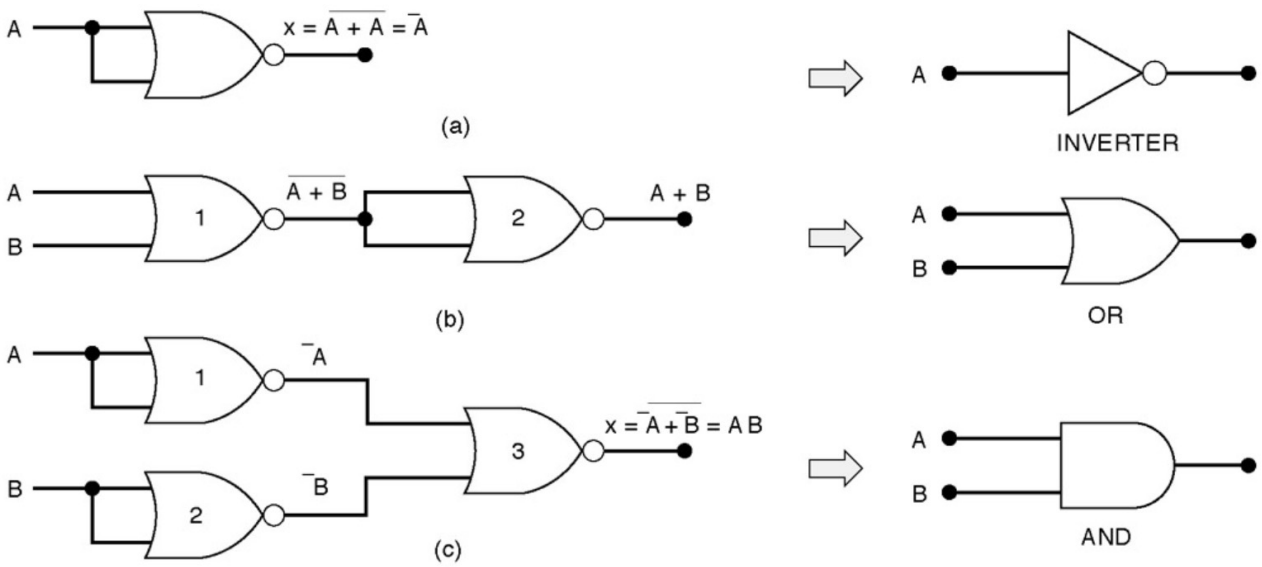

More Examples

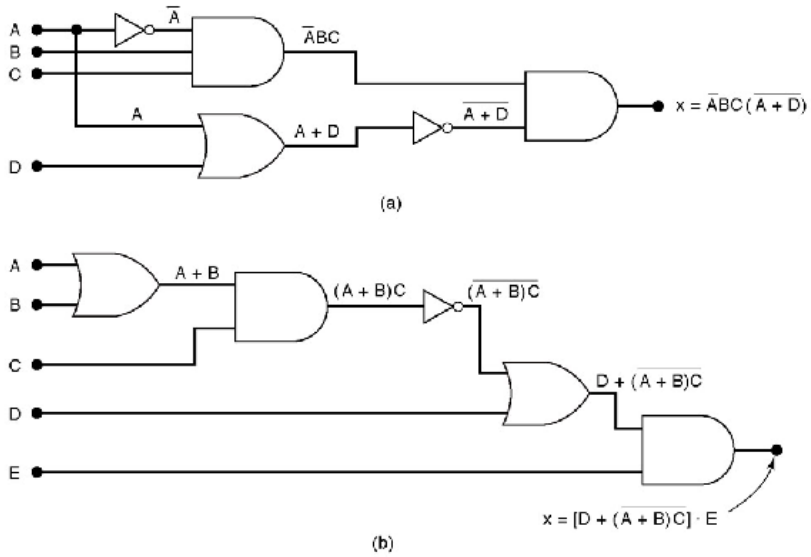

Sum-of-Products (SOP) Form

- All equations can be written in SOP form
- Each row has a minterm
- A minterm is a product (AND) of literals
- Each minterm is TRUE for that row (and only that row)
- Form function by ORing minterms where the output is TRUE
- Thus, a sum (OR) of products (AND terms)

A	*B*	*Y*	minterm	minterm name
0	0	0	$\overline{A}\ \overline{B}$	m_0
0	1	1	$\overline{A}\ B$	m_1
1	0	0	$A\ \overline{B}$	m_2
1	1	1	$A\ B$	m_3

$$Y = \mathrm{F}(A, B) =$$

Sum-of-Products (SOP) Form

- All equations can be written in SOP form
- Each row has a **minterm**
- A minterm is a product (AND) of literals
- Each minterm is TRUE for that row (and only that row)
- Form function by ORing minterms where the output is TRUE
- Thus, a sum (OR) of products (AND terms)

A	*B*	*Y*	minterm	minterm name
0	0	0	$\overline{A}\ \overline{B}$	m_0
0	1	1	$\overline{A}\ B$	m_1
1	0	0	$A\ \overline{B}$	m_2
1	1	1	$A\ B$	m_3

$$Y = F(A, B) =$$

Sum-of-Products (SOP) Form

- All equations can be written in SOP form
- Each row has a **minterm**
- A minterm is a product (AND) of literals
- Each minterm is TRUE for that row (and only that row)
- Form function by ORing minterms where the output is TRUE
- Thus, a sum (OR) of products (AND terms)

A	*B*	*Y*	minterm	minterm name
0	0	0	$\overline{A}\ \overline{B}$	m_0
0	1	1	$\overline{A}\ B$	m_1
1	0	0	$A\ \overline{B}$	m_2
1	1	1	$A\ B$	m_3

$$Y = F(A, B) = \overline{A}B + AB = \Sigma(1, 3)$$

Product-of-Sums (POS) Form

- All Boolean equations can be written in POS form
- Each row has a **maxterm**
- A maxterm is a sum (OR) of literals
- Each maxterm is FALSE for that row (and only that row)
- Form function by ANDing the maxterms for which the output is FALSE
- Thus, a product (AND) of sums (OR terms)

A	*B*	*Y*	maxterm	maxterm name
0	0	0	$A + B$	M_0
0	1	1	$A + \overline{B}$	M_1
1	0	0	$\overline{A} + B$	M_2
1	1	1	$\overline{A} + \overline{B}$	M_3

$$Y = \mathrm{F}(A, B) = (A + B)(A + \overline{B}) = \Pi(0, 2)$$

Boolean Equations Example

- You are going to the cafeteria for lunch
  - You won't eat lunch (E)
  - If it's not open (O) or
  - If they only serve corndogs (C)
- Write a truth table for determining if you will eat lunch (E).

O	*C*	*E*
0	0	
0	1	
1	0	
1	1	

Boolean Equations Example

- You are going to the cafeteria for lunch
  - You won't eat lunch (E)
  - If it's not open (O) or
  - If they only serve corndogs (C)
- Write a truth table for determining if you will eat lunch (E).

O	*C*	*E*
0	0	0
0	1	0
1	0	1
1	1	0

SOP & POS Form

- SOP – sum-of-products

O	*C*	*E*	minterm
0	0		$\overline{O}\,\overline{C}$
0	1		$\overline{O}\,C$
1	0		$O\,\overline{C}$
1	1		$O\,C$

- POS – product-of-sums

O	*C*	*Y*	maxterm
0	0		$O + C$
0	1		$O + \overline{C}$
1	0		$\overline{O} + C$
1	1		$\overline{O} + \overline{C}$

SOP & POS Form

- SOP – sum-of-products

O	*C*	*E*	minterm
0	0	0	$\overline{O}\ \overline{C}$
0	1	0	$\overline{O}\ C$
1	0	1	$O\ \overline{C}$
1	1	0	$O\ C$

$$Y = O\overline{C}$$
$$= \Sigma(2)$$

- POS – product-of-sums

O	*C*	*E*	maxterm
0	0	0	$O + C$
0	1	0	$O + \overline{C}$
1	0	1	$\overline{O} + C$
1	1	0	$\overline{O} + \overline{C}$

$$Y = (O + C)(O + \overline{C})(\overline{O} + \overline{C})$$
$$= \Pi(0, 1, 3)$$

Boolean Algebra

- Goal – to simplify Boolean equations
- Axioms and theorems to simplify Boolean equations
  - Axiom are basic definition and can (need?) not be proved
- Like regular algebra, but simpler: variables have only two values (1 or 0)
- **Duality** in axioms and theorems:
  - ANDs and ORs, 0's and 1's interchanged

Boolean Axioms

	Axiom		Dual	Name
A1	$B = 0$ if $B \neq 1$	A1′	$B = 1$ if $B \neq 0$	Binary field
A2	$\overline{0} = 1$	A2′	$\overline{1} = 0$	NOT
A3	$0 \bullet 0 = 0$	A3′	$1 + 1 = 1$	AND/OR
A4	$1 \bullet 1 = 1$	A4′	$0 + 0 = 0$	AND/OR
A5	$0 \bullet 1 = 1 \bullet 0 = 0$	A5′	$1 + 0 = 0 + 1 = 1$	AND/OR

T1: Identity Theorem

- $\mathbf{B \cdot 1 = B}$
- $\mathbf{B + 0 = B}$

T1: Identity Theorem

- $B \cdot 1 = B$
- $B + 0 = B$

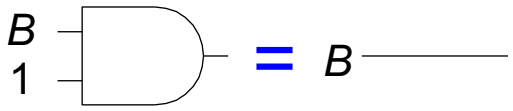

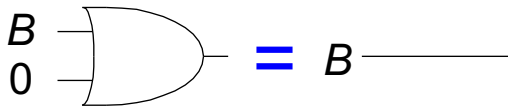

T2: Null Element Theorem

- $B \cdot 0 = 0$
- $B + 1 = 1$

T2: Null Element Theorem

- $B \cdot 0 = 0$
- $B + 1 = 1$

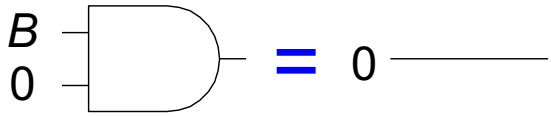

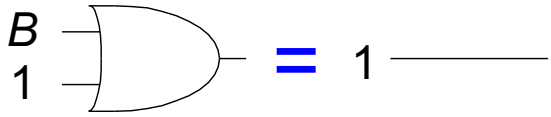

T3: Idempotency Theorem

- $B \cdot B = B$
- $B + B = B$

T3: Idempotency Theorem

- $\mathbf{B} \cdot \mathbf{B} = \mathbf{B}$
- $\mathbf{B} + \mathbf{B} = \mathbf{B}$

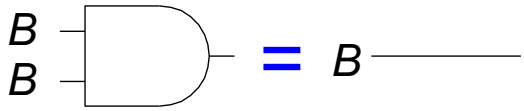

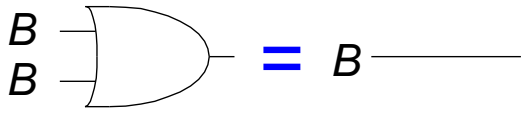

T4: Identity Theorem

- $\overline{\overline{\mathbf{B}}} = \mathbf{B}$

T4: Identity Theorem

- $\overline{\overline{\mathbf{B}}} = \mathbf{B}$

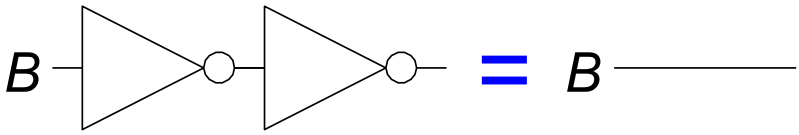

T5: Complement Theorem

- $\mathbf{B} \cdot \overline{\mathbf{B}} = \mathbf{0}$
- $\mathbf{B} + \overline{\mathbf{B}} = \mathbf{1}$

T5: Complement Theorem

- $\mathbf{B \cdot \overline{B} = 0}$
- $\mathbf{B + \overline{B} = 1}$

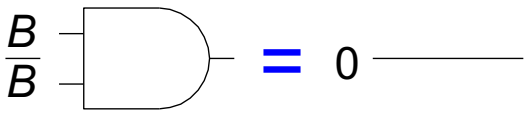

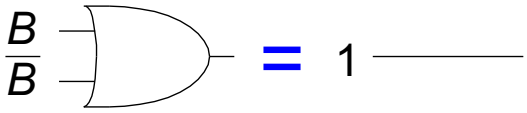

Boolean Theorems Summary

	Theorem		Dual	Name
T1	$B \bullet 1 = B$	T1′	$B + 0 = B$	Identity
T2	$B \bullet 0 = 0$	T2′	$B + 1 = 1$	Null Element
T3	$B \bullet B = B$	T3′	$B + B = B$	Idempotency
T4		$\overline{\overline{B}} = B$		Involution
T5	$B \bullet \overline{B} = 0$	T5′	$B + \overline{B} = 1$	Complements

Boolean Theorems of Several Variables

	Theorem		Dual	Name
T6	$B \bullet C = C \bullet B$	T6′	$B + C = C + B$	Commutativity
T7	$(B \bullet C) \bullet D = B \bullet (C \bullet D)$	T7′	$(B + C) + D = B + (C + D)$	Associativity
T8	$(B \bullet C) + B \bullet D = B \bullet (C + D)$	T8′	$(B + C) \bullet (B + D) = B + (C \bullet D)$	Distributivity
T9	$B \bullet (B + C) = B$	T9′	$B + (B \bullet C) = B$	Covering
T10	$(B \bullet C) + (B \bullet \overline{C}) = B$	T10′	$(B + C) \bullet (B + \overline{C}) = B$	Combining
T11	$(B \bullet C) + (\overline{B} \bullet D) + (C \bullet D)$ $= B \bullet C + \overline{B} \bullet D$	T11′	$(B + C) \bullet (\overline{B} + D) \bullet (C + D)$ $= (B + C) \bullet (\overline{B} + D)$	Consensus
T12	$\overline{B_0 \bullet B_1 \bullet B_2 \ldots}$ $= (\overline{B_0} + \overline{B_1} + \overline{B_2} \ldots)$	T12′	$\overline{B_0 + B_1 + B_2 \ldots}$ $= (\overline{B_0} \bullet \overline{B_1} \bullet \overline{B_2})$	De Morgan's Theorem

Why?

Simplifying Boolean Equations

Example 1:

- $Y = AB + \overline{A}B$

Simplifying Boolean Equations

Example 1:

- $Y = AB + \overline{A}B$

  $= B(A + \overline{A})$ T8

  $= B(1)$ T5'

  $= B$ T1

Simplifying Boolean Equations

Example 2:

- $Y = A(AB + ABC)$

Simplifying Boolean Equations

Example 2:

- $Y = A(AB + ABC)$

$= A(AB(1 + C))$	T8
$= A(AB(1))$	T2’
$= A(AB)$	T1
$= (AA)B$	T7
$= AB$	T3

Further Examples

- X· (X+Y)
- (X+Y) ·(X+Y’)
- X(X’+Y)
- X + XY
- XY+XY’
- X+X’Y

Further Examples

- $X\cdot (X+Y)$
  $= X\cdot X+X\cdot Y= X+XY=X(1+Y)=X\cdot 1=X$
- $(X+Y)\cdot(X+Y')$
  $= XX+XY'+XY+YY' = X+XY'+XY+0=X(1+Y'+Y)=X\cdot 1=X$
- $X(X'+Y)$
  $= XX'+XY = 0 + XY = XY$
- $X + XY$
  $= X\cdot 1 + XY = X(1+Y) = X\cdot 1 = X$
- $XY+XY'$
  $= X(Y + Y') = X\cdot 1 = X$
- $X+X'Y$
  $= X(1+Y) + X'Y = X + XY + X'Y = X + Y(X + X') = X + Y$

More Examples

- $Y = \overline{A}\,\overline{B}\,\overline{C} + A\overline{B}\,\overline{C} + A\overline{B}C$

DeMorgan's Theorem

- $Y = \overline{AB} = \overline{A} + \overline{B}$

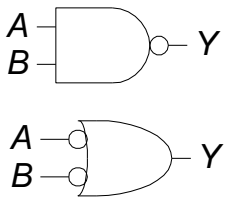

- $Y = \overline{A + B} = \overline{A} \bullet \overline{B}$

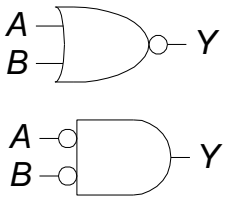

Examples

- Using DeMorgan's Theorems to convert the expressions to one that has only single-variable inversions.
  - $y = \overline{R\overline{S}T + \overline{Q}}$
  - $z = \overline{(A+B)\cdot\overline{C}}$
  - $y = \overline{A + \overline{B} + \overline{C}D}$

Bubble Pushing

- **Backward:**
  - Body changes
  - Adds bubbles to inputs

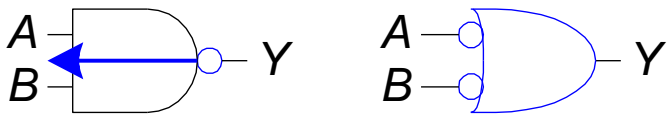

- **Forward:**
  - Body changes
  - Adds bubble to output

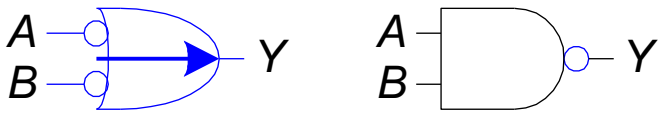

Bubble Pushing

- What is the Boolean expression for this circuit?

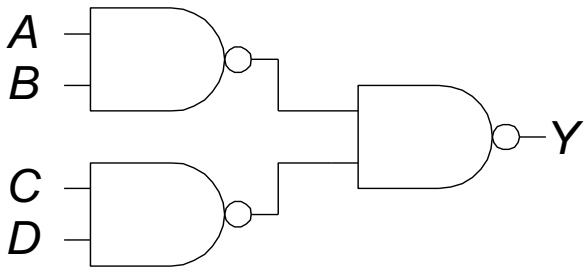

Bubble Pushing

- What is the Boolean expression for this circuit?

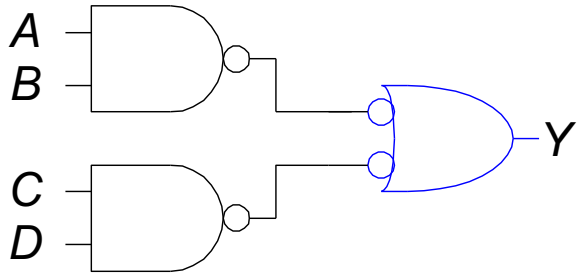

$$Y = AB + CD$$

Bubble Pushing Rules

Why?

- Begin at output, then work toward inputs
- Push bubbles on final output back
- Draw gates in a form so bubbles cancel

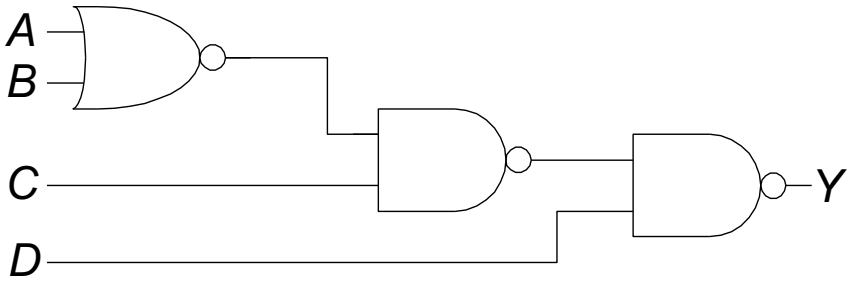

Bubble Pushing Example

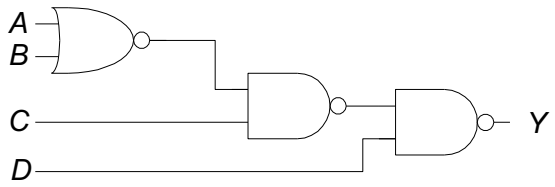

Bubble Pushing Example

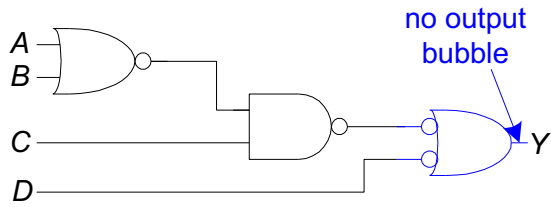

Bubble Pushing Example

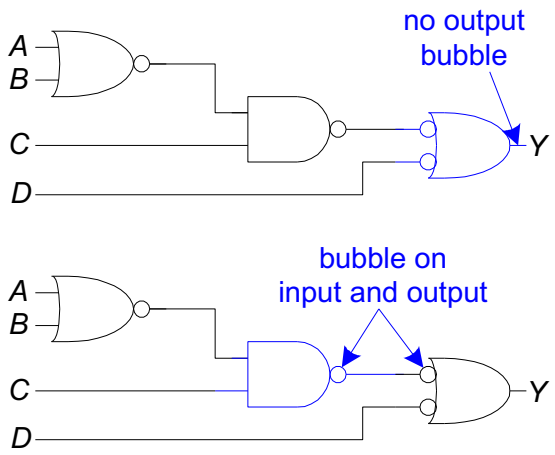

Bubble Pushing Example

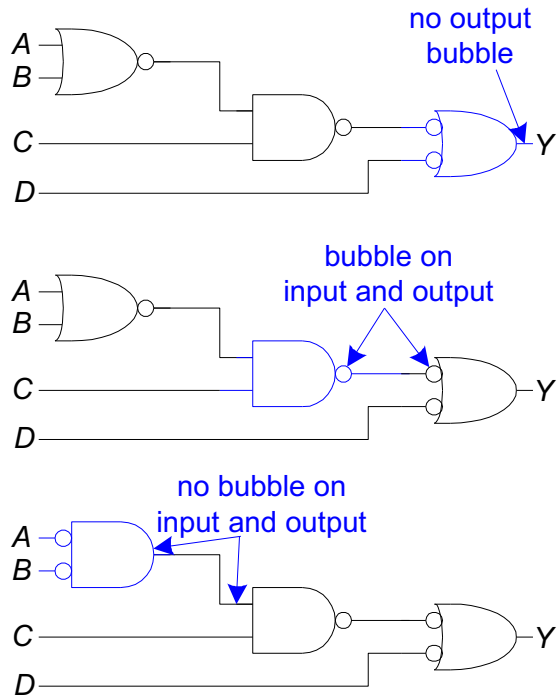

$Y = \overline{A}\,\overline{B}C + \overline{D}$

From Logic to Gates

- Two-level logic: ANDs followed by ORs
- Example: $Y = \overline{A}\overline{B}\overline{C} + \overline{A}\overline{B}C + AB\overline{C}$

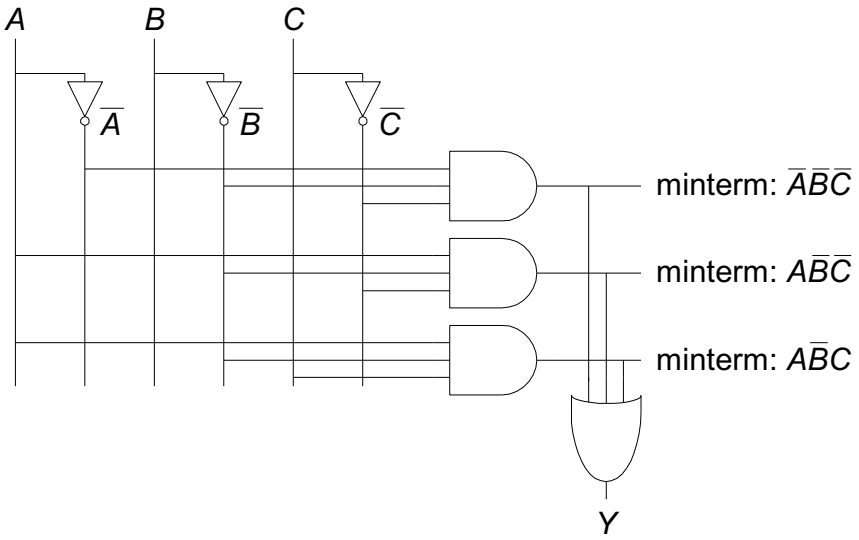

Circuit Schematics Rules

- Inputs on the left (or top)
- Outputs on right (or bottom)
- Gates flow from left to right
- Straight wires are best

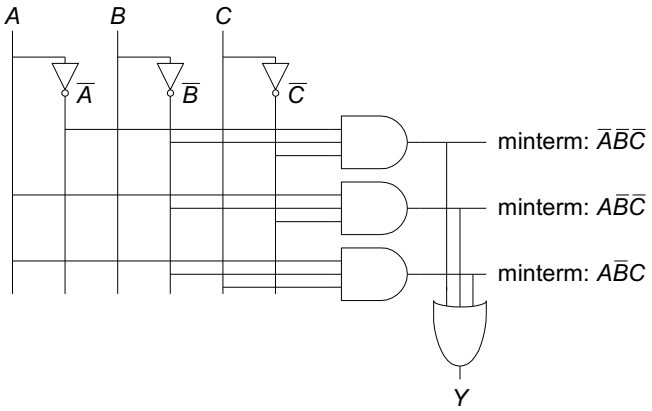

Circuit Schematic Rules (cont.)

- Wires always connect at a T junction
- A dot where wires cross indicates a connection between the wires
- Wires crossing *without* a dot make no connection

wires connect at a T junction

wires connect at a dot

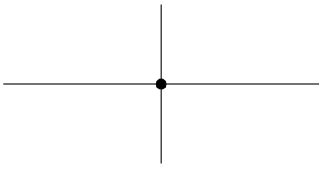

wires crossing without a dot do not connect

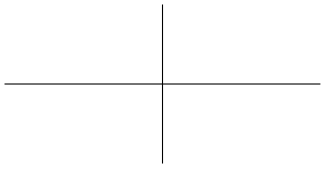

Multiple-Output Circuits

- **Example: Priority Circuit**

Output asserted corresponding to most significant TRUE input

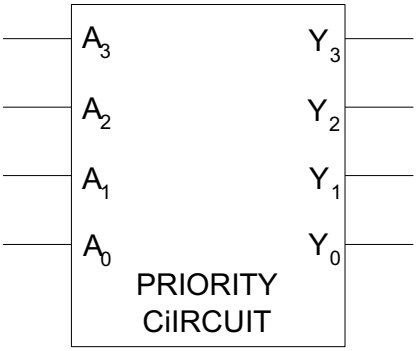

A_3	A_2	A_1	A_0	Y_3	Y_2	Y_1	Y_0
0	0	0	0				
0	0	0	1				
0	0	1	0				
0	0	1	1				
0	1	0	0				
0	1	0	1				
0	1	1	0				
0	1	1	1				
1	0	0	0				
1	0	0	1				
1	0	1	0				
1	0	1	1				
1	1	0	0				
1	1	0	1				
1	1	1	0				
1	1	1	1				

Multiple-Output Circuits

- **Example: Priority Circuit**

Output asserted corresponding to most significant TRUE input

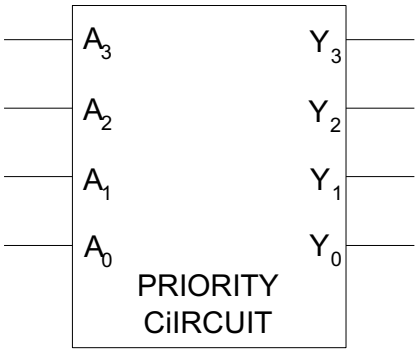

A_3	A_2	A_1	A_0	Y_3	Y_2	Y_1	Y_0
0	0	0	0	0	0	0	0
0	0	0	1	0	0	0	1
0	0	1	0	0	0	1	0
0	0	1	1	0	0	1	0
0	1	0	0	0	1	0	0
0	1	0	1	0	1	0	0
0	1	1	0	0	1	0	0
0	1	1	1	0	1	0	0
1	0	0	0	1	0	0	0
1	0	0	1	1	0	0	0
1	0	1	0	1	0	0	0
1	0	1	1	1	0	0	0
1	1	0	0	1	0	0	0
1	1	0	1	1	0	0	0
1	1	1	0	1	0	0	0
1	1	1	1	1	0	0	0

Priority Circuit Hardware

A_3	A_2	A_1	A_0	Y_3	Y_2	Y_1	Y_0
0	0	0	0	0	0	0	0
0	0	0	1	0	0	0	1
0	0	1	0	0	0	1	0
0	0	1	1	0	0	1	0
0	1	0	0	0	1	0	0
0	1	0	1	0	1	0	0
0	1	1	0	0	1	0	0
0	1	1	1	0	1	0	0
1	0	0	0	1	0	0	0
1	0	0	1	1	0	0	0
1	0	1	0	1	0	0	0
1	0	1	1	1	0	0	0
1	1	0	0	1	0	0	0
1	1	0	1	1	0	0	0
1	1	1	0	1	0	0	0
1	1	1	1	1	0	0	0

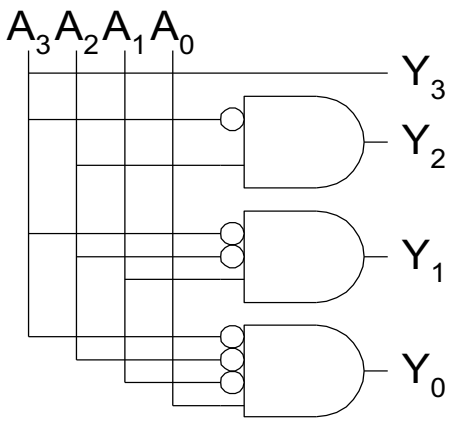

Don't Cares

A_3	A_2	A_1	A_0	Y_3	Y_2	Y_1	Y_0
0	0	0	0	0	0	0	0
0	0	0	1	0	0	0	1
0	0	1	0	0	0	1	0
0	0	1	1	0	0	1	0
0	1	0	0	0	1	0	0
0	1	0	1	0	1	0	0
0	1	1	0	0	1	0	0
0	1	1	1	0	1	0	0
1	0	0	0	1	0	0	0
1	0	0	1	1	0	0	0
1	0	1	0	1	0	0	0
1	0	1	1	1	0	0	0
1	1	0	0	1	0	0	0
1	1	0	1	1	0	0	0
1	1	1	0	1	0	0	0
1	1	1	1	1	0	0	0

A_3	A_2	A_1	A_0	Y_3	Y_2	Y_1	Y_0
0	0	0	0	0	0	0	0
0	0	0	1	0	0	0	1
0	0	1	x	0	0	1	0
0	1	x	x	0	1	0	0
1	x	x	x	1	0	0	0

Contention: X

- Contention: circuit tries to drive output to 1 **and** 0
  - Actual value somewhere in between
  - Could be 0, 1, or in forbidden zone
  - Might change with voltage, temperature, time, noise
  - Often causes excessive power dissipation

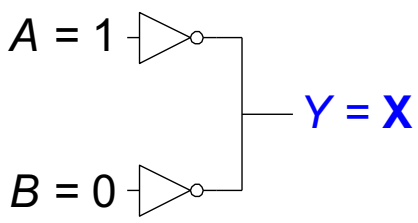

- **Warnings:**
  - Contention usually indicates a **bug**.
  - **X is used for "don't care" and contention** - look at the context to tell them apart

Logic Levels (in Physical Gates)

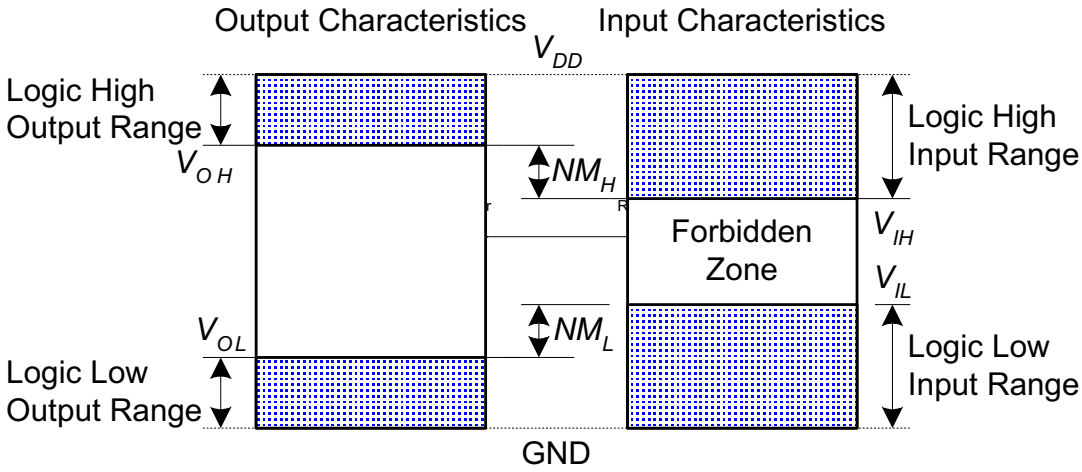

Floating: Z

- Floating, high impedance, open, high Z
- Floating output might be 0, 1, or somewhere in between
  - A voltmeter won't indicate whether a node is floating

Tristate Buffer

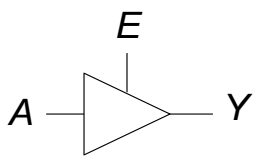

E	A	Y
0	0	Z
0	1	Z
1	0	0
1	1	1

Tristate Busses

- Tristate buffers are commonly used on "busses" that connect multiple chips
  - Many different drivers
  - Exactly one is active (for write) at once
  - Read can be shared
- Current computers prefer point-to-point links for high speed

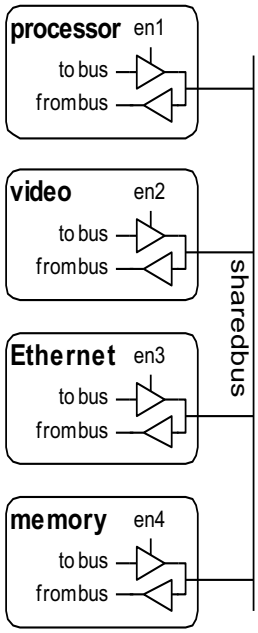

Karnaugh Maps (K-Maps)

- Boolean expressions can be minimized by combining terms
- K-maps minimize equations graphically
- $PA + P\overline{A} = P$

A	B	C	Y
0	0	0	1
0	0	1	1
0	1	0	0
0	1	1	0
1	0	0	0
1	0	1	0
1	1	0	0
1	1	1	0

Y \ AB, C	00	01	11	10
0	1	0	0	0
1	1	0	0	0

Y \ AB, C	00	01	11	10
0	$\bar{A}\bar{B}\bar{C}$	$\bar{A}B\bar{C}$	$AB\bar{C}$	$A\bar{B}\bar{C}$
1	$\bar{A}\bar{B}C$	$\bar{A}BC$	ABC	$A\bar{B}C$

Karnaugh Maps (K-Maps)

- Good for the case up to 4 variables
- Bit orders in Gray code: (00, 01, 11, 10) instead of (00, 01,10, 11)
- Why? Adjust entries that differ only in a single variable
- "**Wraps around**"
  - The squares on the far right are effectively adjacent to the squares on the far left
  - Also the four corners

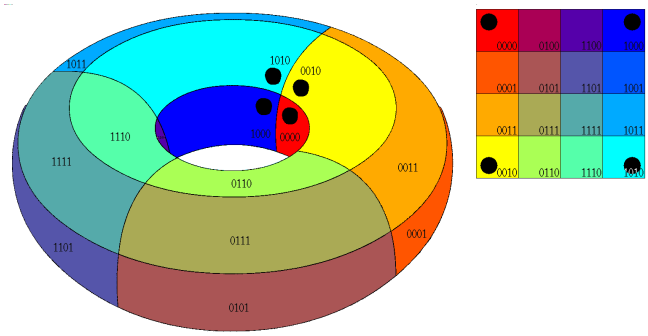

https://en.wikipedia.org/wiki/Karnaugh_map

K-Map

- Circle 1's in adjacent squares
- In Boolean expression, include only literals whose true and complement form are *not* in the circle

A	*B*	*C*	*Y*
0	0	0	**1**
0	0	1	**1**
0	1	0	0
0	1	1	0
1	0	0	0
1	0	1	0
1	1	0	0
1	1	1	0

Y \ *AB* / *C*	00	01	11	10
0	1	0	0	0
1	1	0	0	0

$$Y = \overline{A}\,\overline{B}$$

3-Input K-Map

Y \ AB, C	00	01	11	10
0	$\bar{A}\bar{B}\bar{C}$	$\bar{A}B\bar{C}$	$AB\bar{C}$	$A\bar{B}\bar{C}$
1	$\bar{A}\bar{B}C$	$\bar{A}BC$	ABC	$A\bar{B}C$

Truth Table

A	B	C	Y
0	0	0	0
0	0	1	0
0	1	0	**1**
0	1	1	**1**
1	0	0	0
1	0	1	0
1	1	0	0
1	1	1	**1**

K-Map

Y \ AB, C	00	01	11	10
0				
1				

3-Input K-Map

Y \ AB, C	00	01	11	10
0	$\bar{A}\bar{B}\bar{C}$	$\bar{A}B\bar{C}$	$AB\bar{C}$	$A\bar{B}\bar{C}$
1	$\bar{A}\bar{B}C$	$\bar{A}BC$	ABC	$A\bar{B}C$

Truth Table

A	B	C	Y
0	0	0	0
0	0	1	0
0	1	0	**1**
0	1	1	**1**
1	0	0	0
1	0	1	0
1	1	0	0
1	1	1	**1**

K-Map

Y \ AB, C	00	01	11	10
0	0	1	1	0
1	0	1	0	0

$$Y = \bar{A}B + B\bar{C}$$

K-Map Definitions

- **Complement:** variable with a bar over it

  $\bar{A}, \bar{B}, \bar{C}$

- **Literal:** variable or its complement

  $\bar{A}, A, \bar{B}, B, \bar{C}, C$

- **Implicant:** product of literals

  $A\bar{B}C, \bar{A}C, BC$

- **Prime implicant:** implicant corresponding to the largest circle in a K-map

K-Map Rules

- Every 1 must be circled at least once
- Each circle must span a power of 2 (i.e. 1, 2, 4) squares in each direction
- Each circle must be as large as possible
- A circle may wrap around the edges
- A “don't care” (X) is circled only if it helps minimize the equation

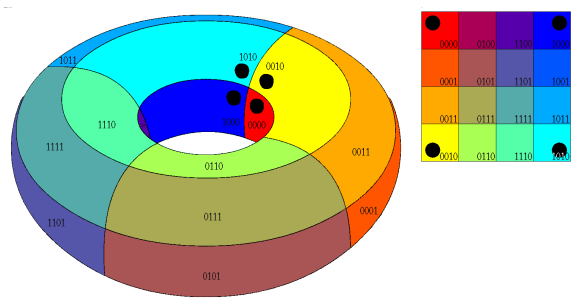

4-Input K-Map

A	B	C	D	Y
0	0	0	0	1
0	0	0	1	0
0	0	1	0	1
0	0	1	1	1
0	1	0	0	0
0	1	0	1	1
0	1	1	0	1
0	1	1	1	1
1	0	0	0	1
1	0	0	1	1
1	0	1	0	1
1	0	1	1	0
1	1	0	0	0
1	1	0	1	0
1	1	1	0	0
1	1	1	1	0

Y: CD \ AB	00	01	11	10
00				
01				
11				
10				

4-Input K-Map

A	B	C	D	Y
0	0	0	0	1
0	0	0	1	0
0	0	1	0	1
0	0	1	1	1
0	1	0	0	0
0	1	0	1	1
0	1	1	0	1
0	1	1	1	1
1	0	0	0	1
1	0	0	1	1
1	0	1	0	1
1	0	1	1	0
1	1	0	0	0
1	1	0	1	0
1	1	1	0	0
1	1	1	1	0

Y: CD \ AB	00	01	11	10
00	1	0	0	1
01	0	1	0	1
11	1	1	0	0
10	1	1	0	1

4-Input K-Map

A	B	C	D	Y
0	0	0	0	1
0	0	0	1	0
0	0	1	0	1
0	0	1	1	1
0	1	0	0	0
0	1	0	1	1
0	1	1	0	1
0	1	1	1	1
1	0	0	0	1
1	0	0	1	1
1	0	1	0	1
1	0	1	1	0
1	1	0	0	0
1	1	0	1	0
1	1	1	0	0
1	1	1	1	0

Y: CD \ AB	00	01	11	10
00	1	0	0	1
01	0	1	0	1
11	1	1	0	0
10	1	1	0	1

$$Y = \bar{A}C + \bar{A}BD + A\bar{B}\bar{C} + \bar{B}\bar{D}$$

Application – Seven-Segment Display Decoder

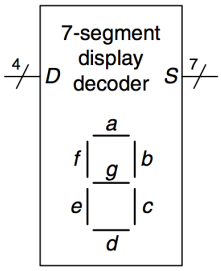

Figure 2.47 Seven-segment display decoder icon

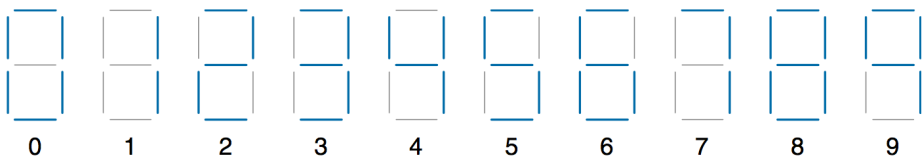

Table 2.6 Seven-segment display decoder truth table

$D_{3:0}$	S_a	S_b	S_c	S_d	S_e	S_f	S_g
0000	1	1	1	1	1	1	0
0001	0	1	1	0	0	0	0
0010	1	1	0	1	1	0	1
0011	1	1	1	1	0	0	1

Application – Seven-Segment Display Decoder

Table 2.6 Seven-segment display decoder truth table

$D_{3:0}$	S_a	S_b	S_c	S_d	S_e	S_f	S_g
0000	1	1	1	1	1	1	0
0001	0	1	1	0	0	0	0
0010	1	1	0	1	1	0	1
0011	1	1	1	1	0	0	1
0100	0	1	1	0	0	1	1
0101	1	0	1	1	0	1	1
0110	1	0	1	1	1	1	1
0111	1	1	1	0	0	0	0
1000	1	1	1	1	1	1	1
1001	1	1	1	0	0	1	1
others	0	0	0	0	0	0	0

S_a $D_{1:0}$ \ $D_{3:2}$	00	01	11	10
00				
01				
11				
10				

Application – Seven-Segment Display Decoder

Table 2.6 Seven-segment display decoder truth table

$D_{3:0}$	S_a	S_b	S_c	S_d	S_e	S_f	S_g
0000	1	1	1	1	1	1	0
0001	0	1	1	0	0	0	0
0010	1	1	0	1	1	0	1
0011	1	1	1	1	0	0	1
0100	0	1	1	0	0	1	1
0101	1	0	1	1	0	1	1
0110	1	0	1	1	1	1	1
0111	1	1	1	0	0	0	0
1000	1	1	1	1	1	1	1
1001	1	1	1	0	0	1	1
others	0	0	0	0	0	0	0

S_a $D_{1:0}$ \ $D_{3:2}$	00	01	11	10
00	1	0	0	1
01	0	1	0	1
11	1	1	0	0
10	1	1	0	0

$$S_a = \bar{D}_3 D_1 + \bar{D}_3 D_2 D_0 + D_3 \bar{D}_2 \bar{D}_1 + \bar{D}_2 \bar{D}_1 \bar{D}_0$$

S_b $D_{1:0}$ \ $D_{3:2}$	00	01	11	10
00	1	1	0	1
01	1	0	0	1
11	1	1	0	0
10	1	0	0	0

$$S_b = \bar{D}_3 \bar{D}_2 + \bar{D}_2 \bar{D}_1 + \bar{D}_3 D_1 D_0 + \bar{D}_3 \bar{D}_1 \bar{D}_0$$

K-Maps with Don't Cares

A	B	C	D	Y
0	0	0	0	1
0	0	0	1	0
0	0	1	0	1
0	0	1	1	1
0	1	0	0	0
0	1	0	1	X
0	1	1	0	1
0	1	1	1	1
1	0	0	0	1
1	0	0	1	1
1	0	1	0	X
1	0	1	1	X
1	1	0	0	X
1	1	0	1	X
1	1	1	0	X
1	1	1	1	X

Y: CD \ AB	00	01	11	10
00				
01				
11				
10				

K-Maps with Don't Cares

A	B	C	D	Y
0	0	0	0	1
0	0	0	1	0
0	0	1	0	1
0	0	1	1	1
0	1	0	0	0
0	1	0	1	X
0	1	1	0	1
0	1	1	1	1
1	0	0	0	1
1	0	0	1	1
1	0	1	0	X
1	0	1	1	X
1	1	0	0	X
1	1	0	1	X
1	1	1	0	X
1	1	1	1	X

Y: CD \ AB	00	01	11	10
00	1	0	X	1
01	0	X	X	1
11	1	1	X	X
10	1	1	X	X

K-Maps with Don't Cares

A	B	C	D	Y
0	0	0	0	1
0	0	0	1	0
0	0	1	0	1
0	0	1	1	1
0	1	0	0	0
0	1	0	1	X
0	1	1	0	1
0	1	1	1	1
1	0	0	0	1
1	0	0	1	1
1	0	1	0	X
1	0	1	1	X
1	1	0	0	X
1	1	0	1	X
1	1	1	0	X
1	1	1	1	X

Y: CD \ AB	00	01	11	10
00	1	0	X	1
01	0	X	X	1
11	1	1	X	X
10	1	1	X	X

$Y = A + \overline{B}\overline{D} + C$

Combinational Building Blocks

- Multiplexers
- Decoders

Multiplexer (Mux)

- Selects between one of *N* inputs to connect to output
- $\log_2 N$-bit select input – control input
- **Example:** **2:1 Mux**

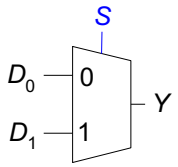

S	D_1	D_0	Y
0	0	0	0
0	0	1	1
0	1	0	0
0	1	1	1
1	0	0	0
1	0	1	0
1	1	0	1
1	1	1	1

S	Y
0	D_0
1	D_1

Multiplexer Implementations

- **Logic gates**
  - Sum-of-products form

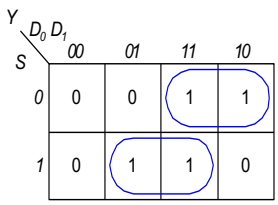

$Y = D_0\overline{S} + D_1 S$

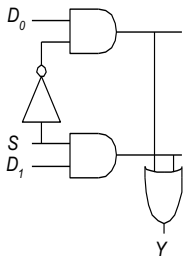

Tristates

- For an N-input mux, use N tristates
- Turn on exactly one to select the appropriate input

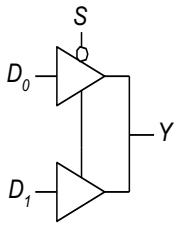

Multiplexer Implementations (4:1)

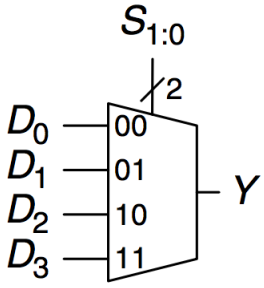

Figure 2.57 4:1 multiplexer

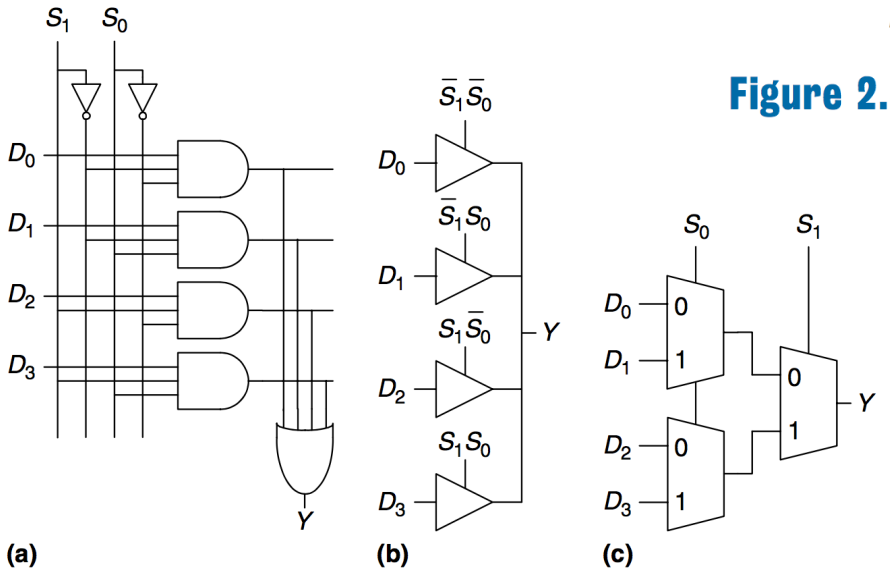

Figure 2.58 4:1 multiplexer implementations: (a) two-level logic, (b) tristates, (c) hierarchical

Logic using Multiplexers

- **Using the mux as a lookup table**

A	B	Y
0	0	0
0	1	0
1	0	0
1	1	1

$Y = AB$

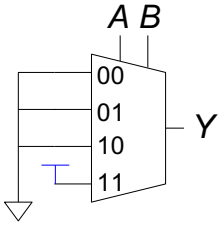

Logic using Multiplexers

- **Reducing the size of the mux**

$Y = AB$

A	B	Y
0	0	0
0	1	0
1	0	0
1	1	1

A	Y
0	0
1	B

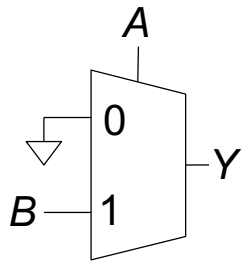

Logic using Multiplexers (Another Example)

A	B	C	Y
0	0	0	1
0	0	1	0
0	1	0	0
0	1	1	1
1	0	0	1
1	0	1	1
1	1	0	0
1	1	1	0

$Y = A\overline{B} + \overline{B}\,\overline{C} + \overline{A}BC$

(a)

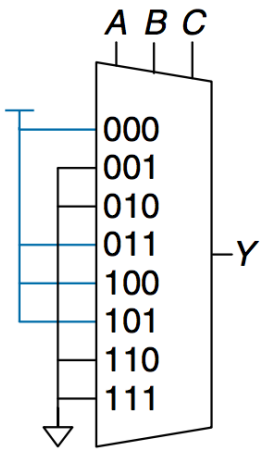

(b)

Decoders

- N inputs, 2^N outputs
- One-hot outputs: only one output HIGH at once

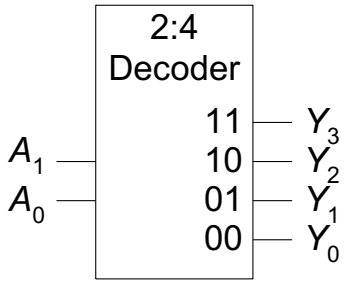

A_1	A_0	Y_3	Y_2	Y_1	Y_0
0	0	0	0	0	1
0	1	0	0	1	0
1	0	0	1	0	0
1	1	1	0	0	0

Decoder Implementation

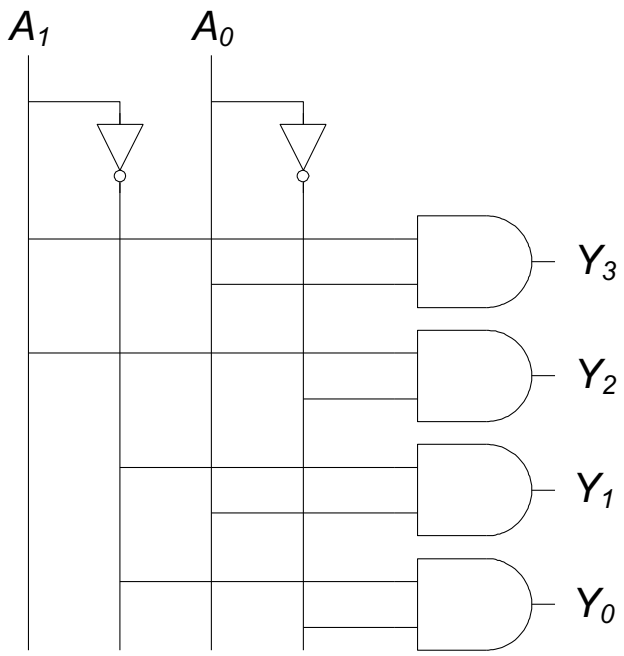

Logic Using Decoders

- **OR minterms**

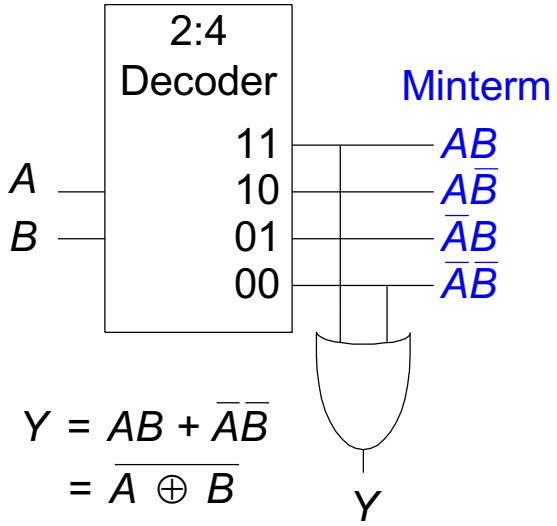

$$Y = AB + \overline{A}\,\overline{B}$$
$$= \overline{A \oplus B}$$

Logic Using Decoders (Another Example)

Example: Full adder

S(x, y, z) = Σ (1,2,4,7)

C(x, y, z) = Σ (3,5,6,7)

x	y	z	C	S
0	0	0	0	0
0	0	1	0	1
0	1	0	0	1
0	1	1	1	0
1	0	0	0	1
1	0	1	1	0
1	1	0	1	0
1	1	1	1	1