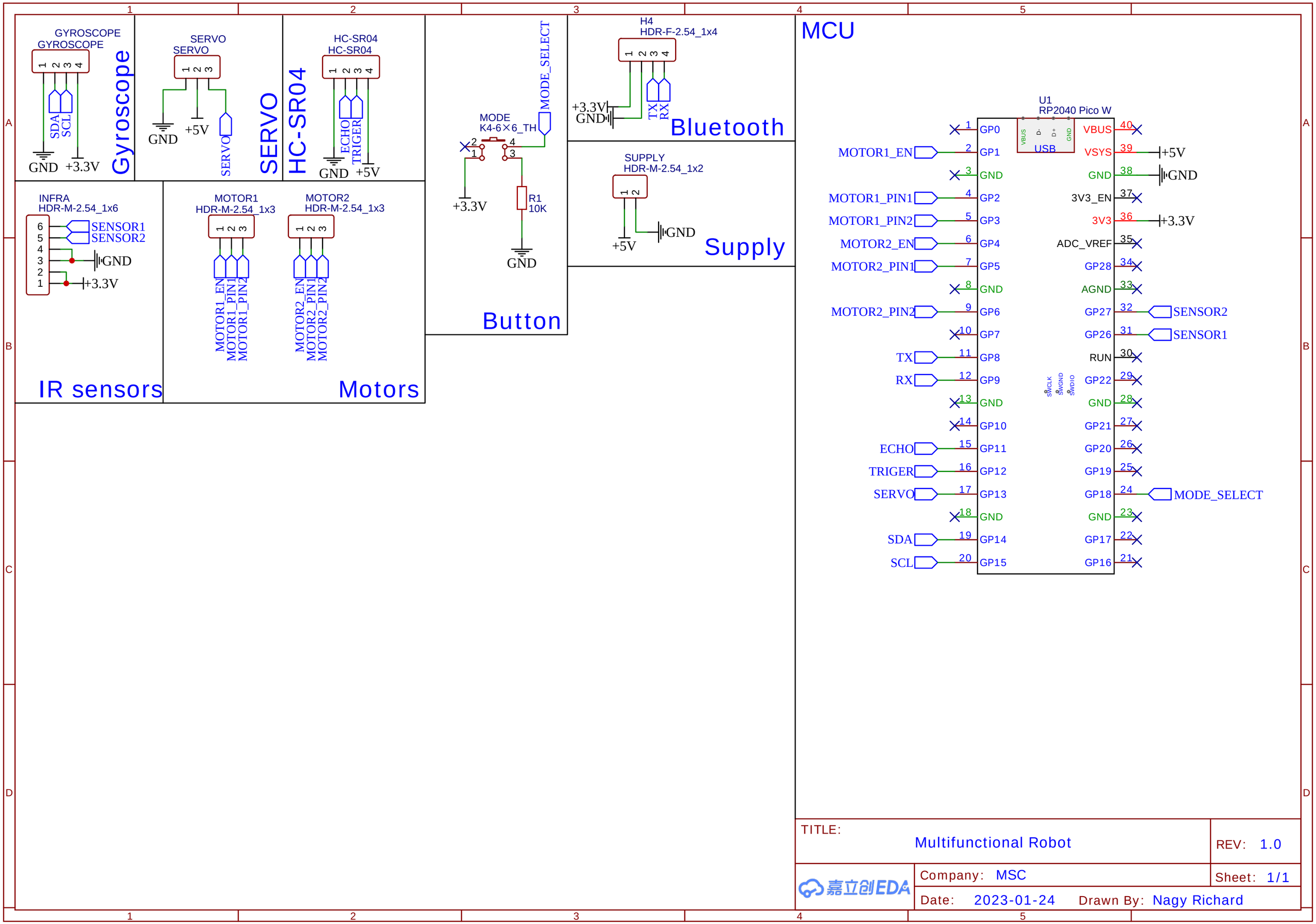

TITLE: Multifunctional Robot		REV: 1.0
嘉立创EDA	Company: MSC	Sheet: 1/1
	Date: 2023-01-24	Drawn By: Nagy Richard