Reel Rack

by Ridge Runner Gear, LLC

RUN THE RIDGE

(and don't forget your Rocket Reel)

Operator's Guide: Because your Rocket Reel deserves a rest too.

Product Name: Reel Rack Brand: Ridge Runner Gear (RRG)

Model Number: RR1
Weight: 2.0 oz (About the same as two good bites of beef jerky.)
Dimensions: 6.1" L x 2.3" W x 3" H (Shorter than the fish you 'threw back.)
Materials: ASA, stainless steel (Made for fishin', not for quittin'.)
Pole Diameter Range: 1/2" (.500) to 13/16" (.812)

What Is This Magical Contraption?

Meet the Reel Rack — a hands-free reel holder with more gumption than a raccoon in your cooler. Mount it to a chair, pole, or anything rounder than a camp biscuit, and suddenly you've got a personal fishin' valet. Clip in your Rocket Reel, kick back like a ridge-top king, and let your hands roam free for cocoa, campfire tunes, or swattin' skeeters. It's small, it's light, and it makes you look like you planned ahead (even if you didn't).

NOTICE: Reading this manual first is quicker than chasing your reel across the campsite, cheaper than replacing a busted chair, and far less embarrassing than explainin' how you tipped over tryin' to balance your Rocket Reel in your lap. Think of it as sittin' pretty with know-how before sittin' pretty with your Reel Rack.

Why the Reel Rack is Smarter Than Your Average Rod Holder

Field Manual Spec	Civilian Translation
Operational Versatility – Attaches to camp chairs, poles and just about anything round.	**Mounts anywhere –** Chair, pole, fence post… maybe even cousin Jimmy's walking stick.
Compact Portability – Small footprint with maximum function.	**Tiny but handy –** Packs smaller than a sandwich, works bigger than a toolbox.
Mission-Grade Durability – Built from tough materials to handle rain, sun, and campsite clumsiness.	**Built tough –** Weatherproof and whoops-proof.
Simplified Deployment – Quick-mount system with secure clamp.	**Clamp and chill –** Easier than popping open a root beer.
Rapid Release Trigger – One-touch design for lightning-fast reel removal.	**Snag-free speed –** Faster than a cat spotting the can opener.
Low-Mass Advantage – Weighs in at just 2.0 ounces.	**Feather-light –** Lighter than the marshmallow you dropped in the fire.
Secure Containment – Rack locks your Rocket Reel firmly in place.	**Reel stays put –** Holds tighter than a tick on a hound.

About Ridge Runner Gear

At Ridge Runner Gear, we believe you shouldn't have to choose between comfort and capability. Our gear is meticulously engineered for those who seek the serenity of the wilderness without sacrificing the sophistication of well-designed essentials. Whether you're setting up a base camp beneath alpine stars or trekking toward your next breathtaking vista, our products deliver premium performance with minimalist weight. Because luxury isn't about excess—it's about excellence, wherever the trail leads.

We are a faith-based company, guided by Christian values in everything we do—from the way we design our gear to how we serve our customers. We believe the outdoors is one of God's greatest gifts, and we're passionate about helping others enjoy it responsibly and respectfully. That's why we practice Leave No Trace principles and strive to be good stewards of the wild places we love.

Proudly American Made, our gear is built with rugged durability and refined utility for the serious adventurer.

Thank you for supporting our dream and being part of the Ridge Runner journey. With your support, we get to build gear we love—for adventures you'll never forget.

Dimensions

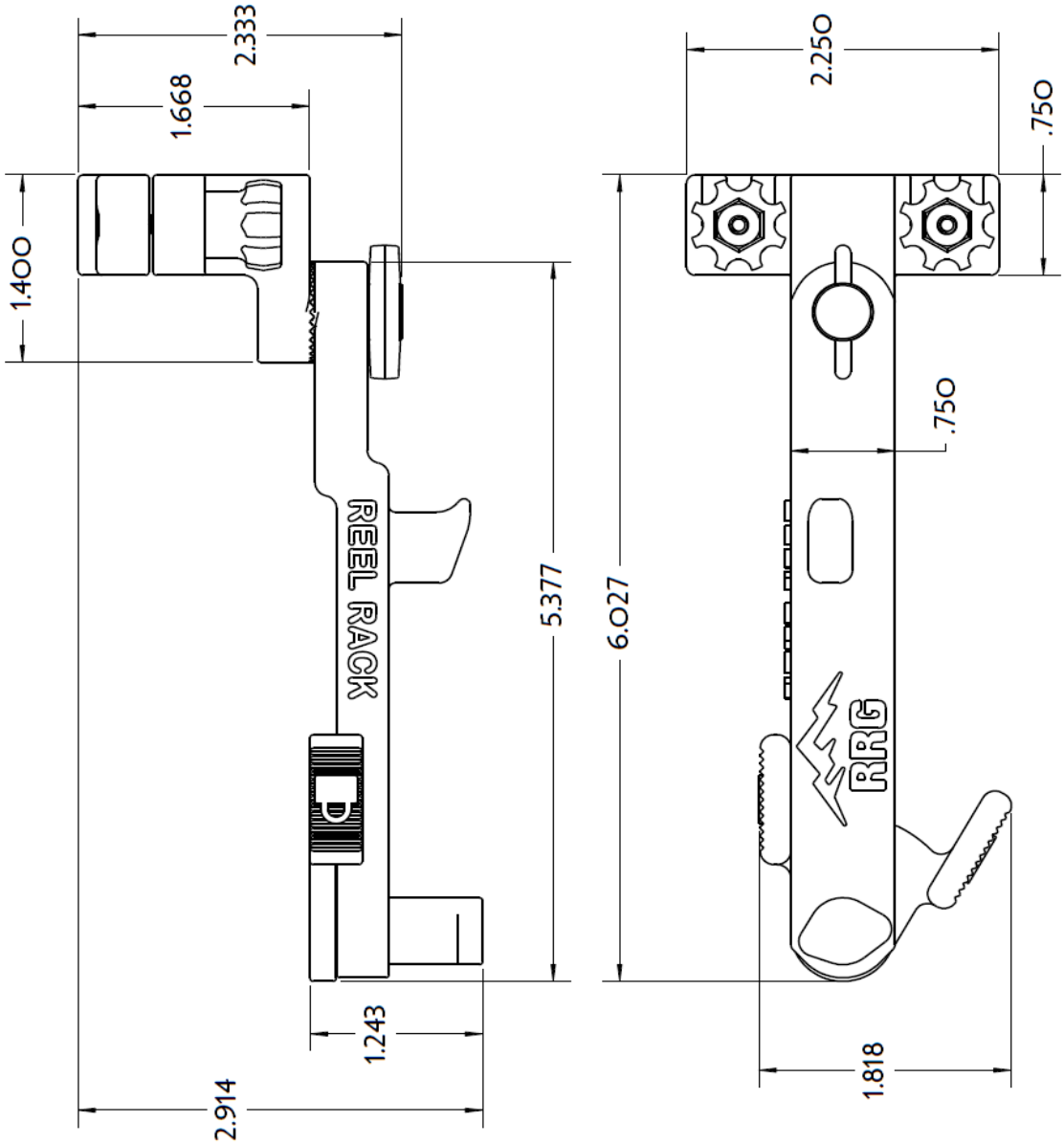
2.333
1.668
1.400
REEL RACK
5.377
1.243
2.914
2.250
.750
6.027
.750
RRG
1.818

Identification

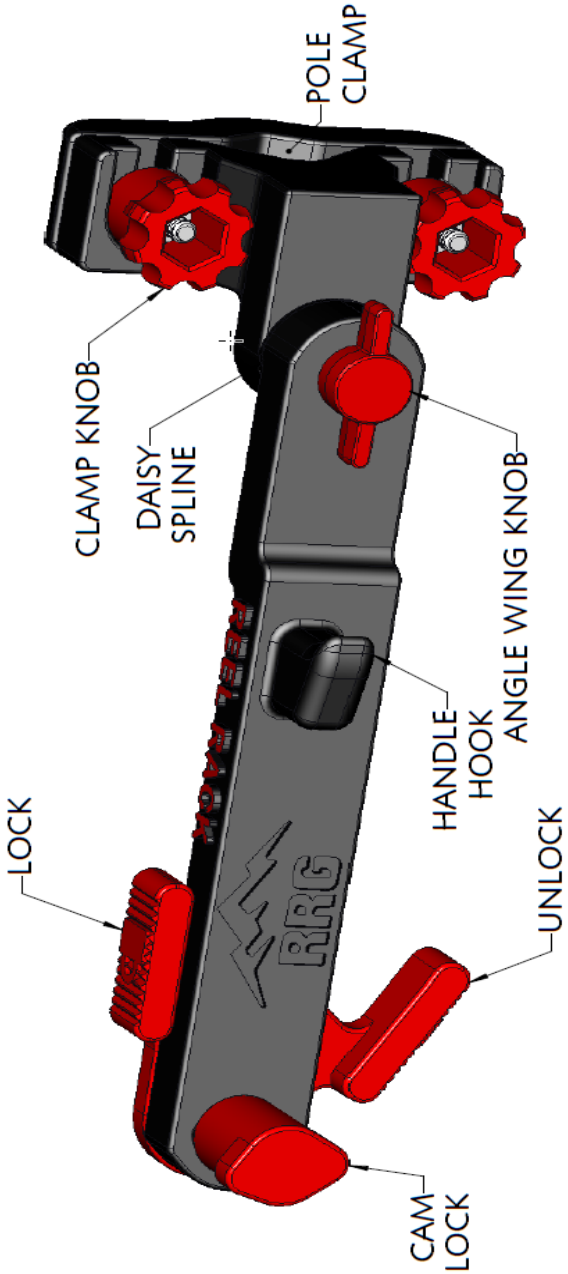

Assembly & Operation Instructions — Reel Rack

Assembly

- Loosen the **clamp knobs** and slide out the pole clamp.
  (Think of it like loosening your belt after a fish fry — just enough to make room.)

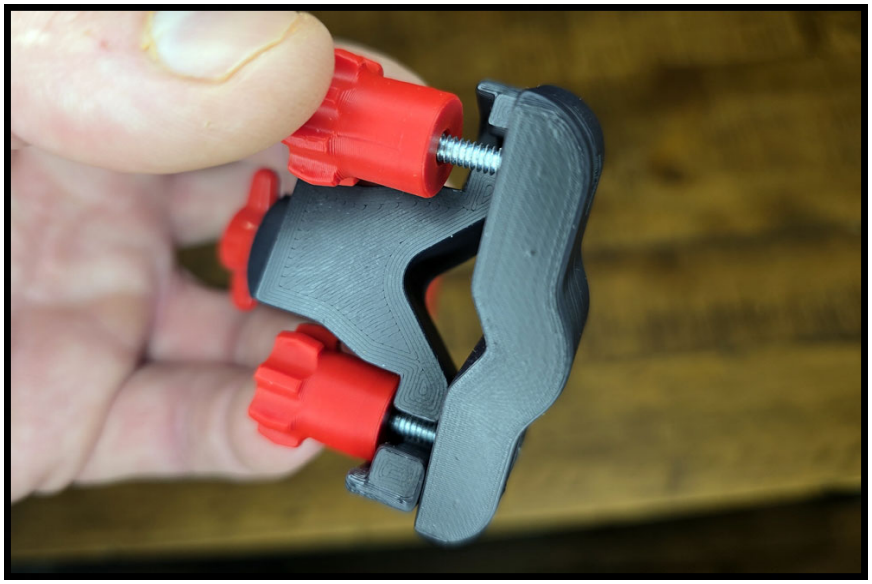

- Place the **Reel Rack** onto your chair arm support pole.
  (Yes, the chair — not Uncle Earl's walking stick.)

- Slide the **pole clamp** back in and tighten the clamp knobs.
  (Clamp it firm so the fish don't swivel your setup like a weather vane.)

- Loosen the **angle wing knob** and rotate the arm to your favorite angle.
  (Because comfort matters — you're fishin', not runnin' a drill press.)

- Tighten the **angle wing knob**.
  (The geared spline locks it in, so no need to crank it like you're wringing water out of overalls.)

Operation

- Slide the **Rocket Reel handle** onto the arm, dropping the hook into the bottom handle slot.
  (If it fits, you're doin' it right — no duct tape required.)

- Make sure the **lock** is in the **unlock position** first.
  (Forgetting this step is like tryin' to open the cooler without unclipping the latch.)

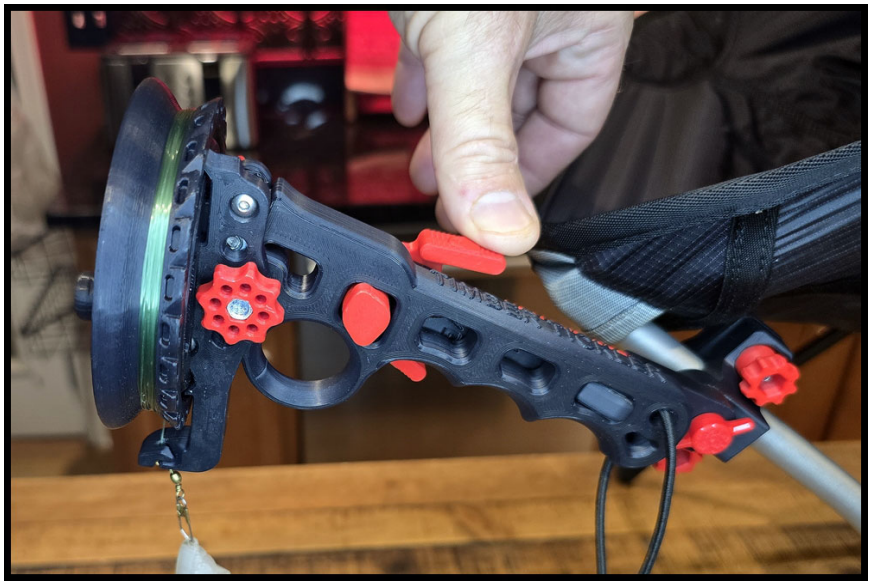

- Rotate the lock into the **locked position** to secure your reel.
  (It'll hold tighter than a tick on a hound — promise.)

- **To remove:** Grab the Rocket Reel like you're about to land a lunker, flick the cam lever up with your middle finger (it's finally useful for somethin' besides traffic), and swing that reel out smooth as butter on a hot biscuit.

Reel Rack Tips & Tricks

- **Find Your Sweet Spot** – Adjust the arm angle so your reel sits where it feels natural. *(If you're stretchin' like a yoga class to reach it, you're doin' it wrong.)*
- **Snug, Not Hulk** – Tighten the knobs until it holds steady. *(It ain't a jar of grandma's pickles — no need to crank down with both hands.)*
- **Quick Release Magic** – Practice the trigger a couple times before showtime. *(Faster than grabbin' the last biscuit at a family reunion.)*
- **Lock It Before You Rock It** – Always double-check that cam lock. *(Better than explainin' how your reel took a swim without you.)*
- **Travel Light** – At just 2 ounces, toss it in your pack, glove box, or tackle bag. *(It's lighter than the excuses for "the one that got away.")*
- **Hands-Free Happiness** – Use the extra freedom for snacks, strummin' a campfire tune, or teachin' the kids to untangle their own line.

Care & Feeding of Your Reel Rack (Because Even Racks Deserve TLC)

- **Keep it clean:** Knock off dirt, fish scales, and snack crumbs after each trip. A clean Reel Rack holds reels, not yesterday's regrets.
- **Soap, not science experiments:** Rinse with mild soap and water. Harsh chemicals are for mad scientists, not fishing gear.
- **Dry it off:** Water and plastic ain't best friends. Put it away soaked, and you'll get Eau de Swamp in no time.
- **Check your knobs:** Give the clamps and lock a wiggle test now and then. A quick once-over today beats explainin' to your buddies why your reel took a dive.
- **Don't roast it:** ASA plastic's tough and UV-resistant, but it ain't cast iron. Don't bake it in a hot truck or leave it by the fire pit unless you want modern art.
- **Lube it up:** A little quick drying silicone spray (***MVP**: WD-40 Specialist*) on the moving parts keeps things slicker than a catfish in a kiddie pool.

Need Parts? Want to Chat?

To purchase replacement parts contact us at:
www.rrgruntheridge.com

Final Words of Wisdom

Clamp it, lock it, catch it — everything else is just bait shop gossip.

DRAWING #
700375-01

ITEM	QTY	PART #	DESCRIPTION
1	1	700224-02	ASSY, POLE CLAMP
2	1	700388-01	ASSY, REEL RACK ARM

REV NO	DATE	DESCRIPTION	ECN NO	BY

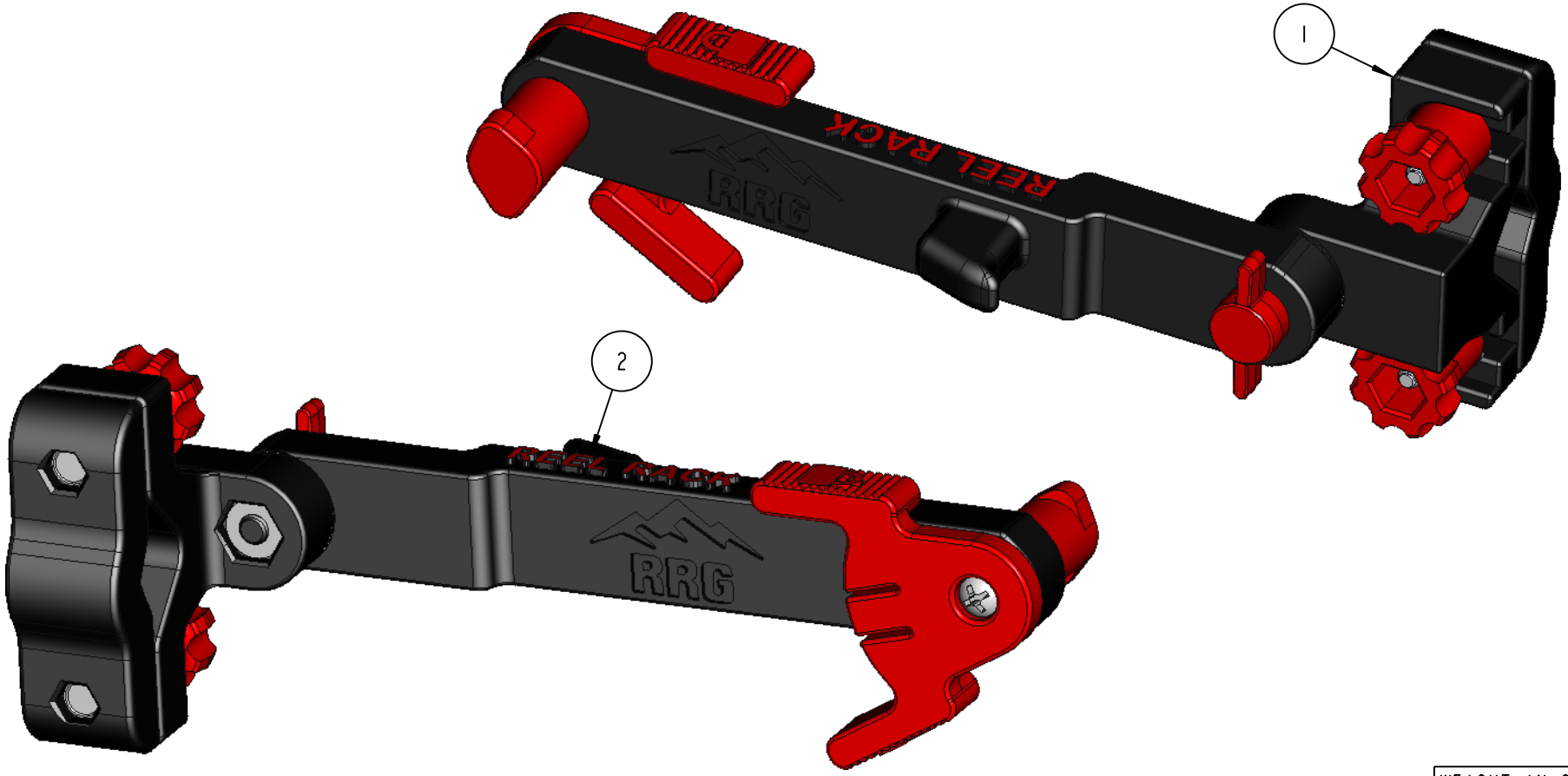

WEIGHT IN OZ.
2.0

DRAWN BY: A KEY	SCALE 1.000	DIMENSIONAL TOLERANCES UNLESS OTHERWISE NOTED .XX .01 / .XXX .005 / ANG. .5	MATERIAL: N/A	THIRD ANGLE PROJECTION	PROPRIETARY AND CONFIDENTIAL NO PORTION OF THIS DRAWING MAY BE QUOTED OR REPRODUCED IN ANY FORM WITHOUT THE EXPRESS WRITTEN PERMISSION OF RIDGE RUNNER GEAR, LLC. CANTON, GA 30114 USA
CHECKED BY:	DATE Sep-24-25	REMOVE ALL BURRS AND SHARP EDGES UNLESS OTHERWISE NOTED	HEAT TREAT: N/A	MODEL: RRACK	TITLE: ASSY, REEL RACK
TRACED BY:	MASTER	ALL DIMENSIONS ARE FINISHED DIMENSIONS DO NOT SCALE - WORK TO DIMENSIONS ONLY	FINISH: N/A	SHEET NO.: 3OF6	DRAWING # 700375-01

RIDGE RUNNER

DRAWING #
700388-01

ITEM	QTY	PART #	DESCRIPTION
1	1	700235-01	ASSY, KNOB WING 10-32X.75
2	1	700372-01	BRACKET, ROCKET REEL MOUNT
3	1	700376-01	ASSY, REEL RACKER LOCK

REV NO	DATE	DESCRIPTION	ECN NO	BY

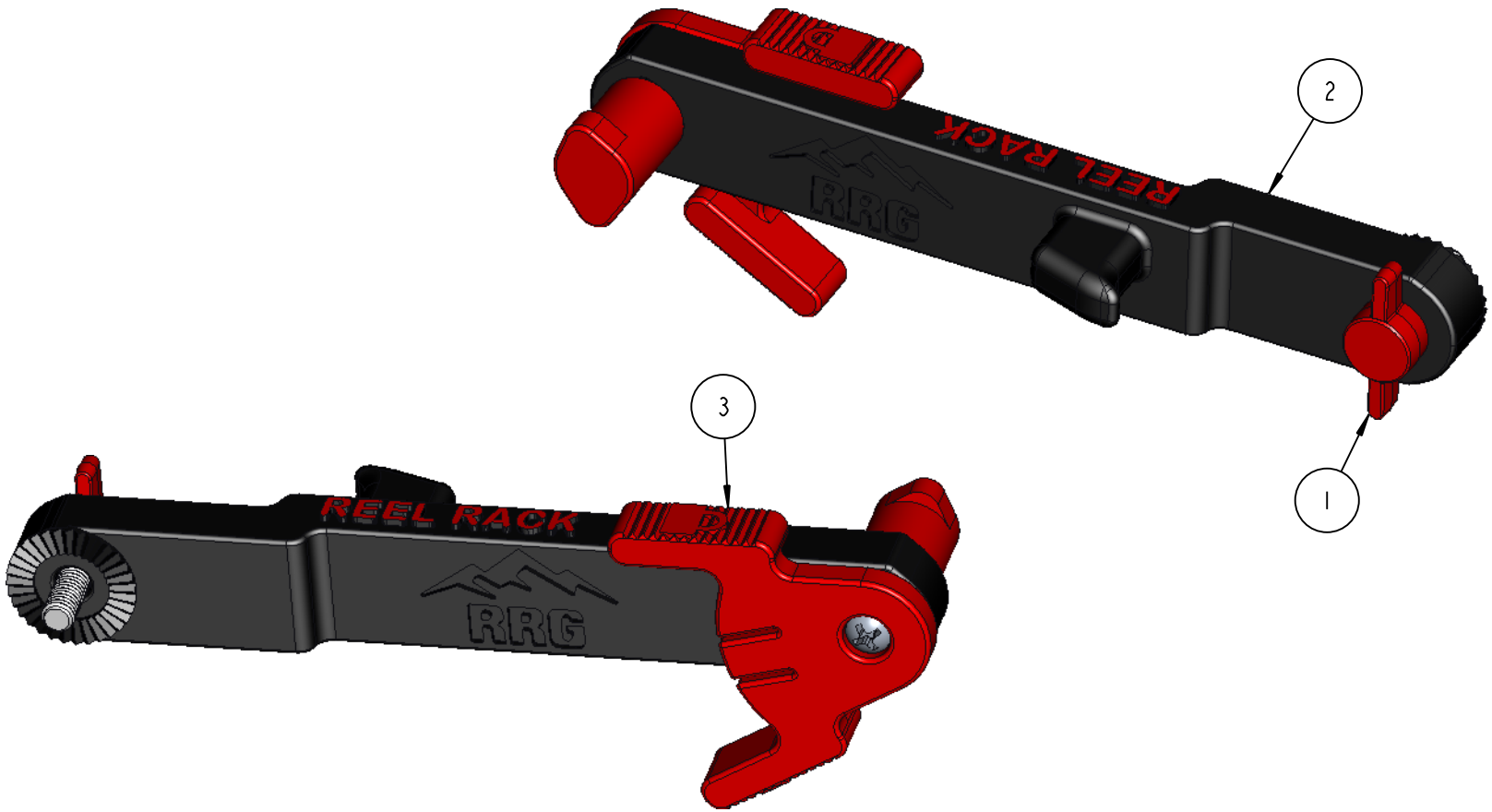

WEIGHT IN OZ.
.85

DRAWN BY: A KEY	SCALE 1.000	DIMENSIONAL TOLERANCES UNLESS OTHERWISE NOTED .XX .01 / .XXX .005 / ANG. .5	MATERIAL: N/A	THIRD ANGLE PROJECTION	PROPRIETARY AND CONFIDENTIAL NO PORTION OF THIS DRAWING MAY BE QUOTED OR REPRODUCED IN ANY FORM WITHOUT THE EXPRESS WRITTEN PERMISSION OF RIDGE RUNNER GEAR, LLC. CANTON, GA 30114 USA
CHECKED BY:	DATE Sep-24-25	REMOVE ALL BURRS AND SHARP EDGES UNLESS OTHERWISE NOTED	HEAT TREAT: N/A	MODEL: REELRACK	TITLE: ASSY, REEL RACK ARM
TRACED BY:	MASTER	ALL DIMENSIONS ARE FINISHED DIMENSIONS DO NOT SCALE - WORK TO DIMENSIONS ONLY	FINISH: N/A	SHEET NO.: 1OF1	DRAWING # 700388-01

RIDGE RUNNER

DRAWING # 700224-02

ITEM	QTY	PART #	DESCRIPTION
1	1	700225-02	CLAMP, POLE
2	1	700226-01	CLAMP, POLE
3	2	700392-01	ASSY, DEEP SET 6-32 KNOB
4	1	90480A195	NUT, 10-32
5	2	93075A153	BOLT, HEX 6-32 X 1.00

REV NO	DATE	DESCRIPTION	ECN NO	BY

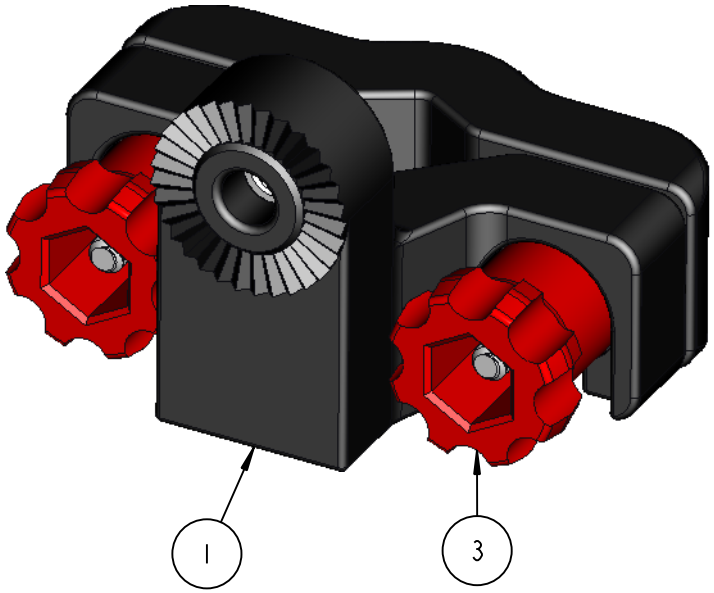

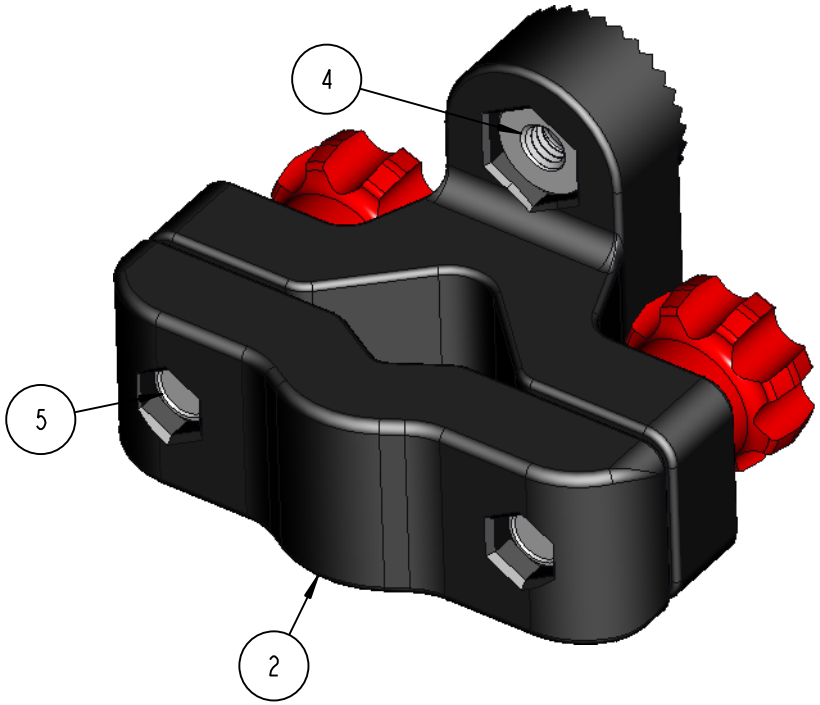

WEIGHT IN OZ.
1.0

DRAWN BY: A KEY	SCALE 1.500	DIMENSIONAL TOLERANCES UNLESS OTHERWISE NOTED (.XX .01, .XXX .005, ANG. .5)	MATERIAL: N/A	THIRD ANGLE PROJECTION	PROPRIETARY AND CONFIDENTIAL NO PORTION OF THIS DRAWING MAY BE QUOTED OR REPRODUCED IN ANY FORM WITHOUT THE EXPRESS WRITTEN PERMISSION OF RIDGE RUNNER GEAR, LLC. CANTON, GA 30114 USA
CHECKED BY:	DATE Sep-13-25	REMOVE ALL BURRS AND SHARP EDGES UNLESS OTHERWISE NOTED	HEAT TREAT: N/A	MODEL: RACK	TITLE: ASSY, POLE CLAMP
TRACED BY:	MASTER	ALL DIMENSIONS ARE FINISHED DIMENSIONS DO NOT SCALE - WORK TO DIMENSIONS ONLY	FINISH: N/A	SHEET NO.: 1 OF 1	DRAWING # 700224-02

RIDGE RUNNER

Trick Out Your Reel Rack: Optional Gear for Overachievers

Yak Rack: Your Kayak's New MVP

The Yak Rack turns your kayak into a fully loaded fishing machine! It mounts your Rocket Reel and Tackle Toter tackle box right into standard T-slots—no drilling, no fuss. With the same trusty trigger mechanism as the Reel Rack, plus a quick-lock sliding arm to secure your tackle box, everything stays put even when the action heats up. The articulated mount adjusts to your setup and pops off quickly when it's time to pack up. Paddle, cast, conquer—yak-style.

Tack Rack:Your Chair's Tackle Sidekick

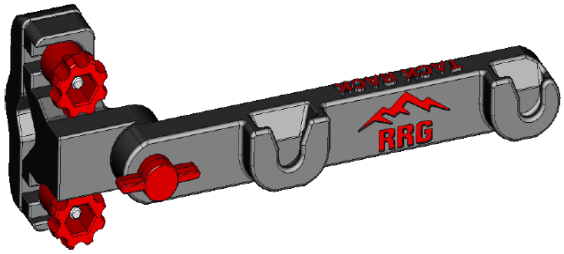

The Tack Rack keeps your Reel Rack right where you need it—mounted to your camp chair or any round pole for hands-free, hassle-free access. It's ultra-lightweight, packs down easy, and holds your tackle box snug so it won't budge... until you want it to. Sit back, relax, and let your chair do the organizing.

Rocket Reel:Your Cast-Anywhere Ticket to Dinner

Why pack two handles when one will do it all? Clip in the Rocket Reel kit and watch your Timber Tickler handle transform from a branch-busting saw grip into a fish-wrangling reel holder. One minute you're clearing campfire wood, the next you're pulling dinner out of the creek like a backwoods magician. It still fits the Ridge Runner belt clip system, so you can swap from "Paul Bunyan mode" to "Old Man and the Sea" in seconds flat — no toolbox, no hassle, just pure outdoorsy showmanship.

Tackle Toter: Your Belt-Mounted Bait Boss

Meet the Tackle Toter—the tactical-grade tackle box that does it all. Your Rocket Reel snaps apart and mounts right to the front, making you ready to cast at a moment's notice. It clips onto quick-release belt mounts, fits standard MOLLE webbing like a glove, and connects seamlessly to the Yak Rack or Tack Rack for kayak or camp chair fishing. Use it while strapped to your belt like a true backcountry commando. Available in five models with up to 12 individually covered compartments—because organized chaos is still chaos.

Timber Tickler: One Handle, Endless Possibilities

Meet the Timber Tickler—the ultralight backpacking saw that moonlights as your Rocket Reel handle. Designed for serious weight savers, it breaks down to blade-length size for compact carry. With five scabbard-style sheath options (6", 9", and 12" blades available), it attaches to the same quick-release belt clip as your other RRG gear. The handle snaps to the sheath and locks tight with a clever wedge system—no wiggle, all wow. One handle + multiple blade sheaths = one smart, versatile saw that saves pack space *and* cash
.

Don't just hike it — run the ridge at
www.rrgruntheridge.com

Legal Notices & Policies

Copyright & Use Disclaimer

All content, images, instructions, and designs in this manual are the property of Ridge Runner Gear. Unauthorized reproduction, distribution, or commercial use of any part of this manual or product design is not permitted without written permission.
© 2025 Ridge Runner Gear. All rights reserved.

Liability Disclaimer

Ridge Runner Gear assumes no responsibility for any injury, damage, or loss resulting from the use or misuse of the Reel Rack. Users are responsible for reading and following all instructions provided in this manual. Fishing and outdoor activities involve inherent risks, including but not limited to sharp hooks, slippery banks, stubborn fish, and the occasional toppled camp chair. The Reel Rack holds your reel — not your common sense. Always exercise caution, fish responsibly, and remember: it won't help explain to your spouse why you spent the grocery money on "just one more lure." Use the Reel Rack at your own risk.

Limited Warranty

Ridge Runner Gear warrants the Reel Rack to be free from defects in materials and workmanship under normal use for a period of 90 days from the date of purchase. This warranty applies only to the original purchaser and does not cover damage caused by misuse, abuse, modifications, improper maintenance, or normal wear and tear.
If a defect arises during the warranty period, Ridge Runner Gear will, at its discretion, repair or replace the defective part with proof of purchase. To submit a warranty claim, contact us at: www.rrgruntheridge.com

Return Policy

If you're not completely satisfied with your Reel Rack, you may return it within 30 days of purchase for a full refund or exchange. All returns must include an RMA (Return Merchandise Authorization) number. Items must be returned in unused condition with original packaging. Return shipping is the responsibility of the customer unless the product arrived damaged or defective. To initiate a return or exchange, contact us at: www.rrgruntheridge.com

A Word on 3D Printing

Our gear is proudly 3D printed, which means you may spot layer lines, tiny gaps, or slight weight differences. These are natural traits of the process and do not affect strength or performance. Color tones may also vary from batch to batch. While Ridge Runner Gear is a function over form company, we still care about aesthetics and hold every product to the highest standards possible. In short: it may not look like it came from a spaceship factory, but it'll perform like it belongs on your next adventure.