Tackle Toter S7C

by Ridge Runner Gear, LLC

RUN THE RIDGE

(and don't forget your Rocket Reel)

Operator's Guide: Because Pockets Can't Handle This Much Awesome

Product Name: Tackle Toter **Brand:** Ridge Runner Gear (RRG)
Model Number: S7C (Because 'Tackle Hauler Grand Slam Supreme' was too long.)
Weight: 3.8 oz (Light enough to forget it's there until you sit on it.)
Dimensions: 5.1" L x 4" W x 1.5" H (Small in footprint, big in appetite.)
Materials: ASA, TPU, stainless steel (Engineered to survive both rainstorms and fishing lies.)
Compartments : 4 little, 2 middlin', and 1 whopper — all with lids tougher than your aunt's meatloaf.

What Is This Magical Contraption?

Meet the Tackle Toter—a tactical tackle box with more tricks than your Uncle Earl. Mount your Rocket Reel to the front, clip it on your belt, MOLLE, Yak Rack, or Tack Rack, and you're combat-ready to cast. Strap it on like a backcountry commando, with 7 covered compartments to keep your chaos organized… mostly.

NOTICE: Reading this manual first is cheaper than replacing lost lures, faster than untangling six feet of fishing line, and way less embarrassing than explaining to your buddies how you managed to hook yourself instead of the bass. Think of it as organizing your brain before you organize your tackle.

Why the Tackle Toter is the Smartest Box You'll Pack

Field Manual Spec	Civilian Translation
Operational Versatility – Interfaces with belt mounts, MOLLE webbing, Yak Rack, and Tack Rack.	**Clips anywhere** – belt, chair, kayak… even your dog if he stands still long enough.
Compact Portability – Minimal footprint with maximum storage capacity.	**Small but mighty** – Fits in a pack, glove box, or under the seat, yet hauls more junk than a flea market.
Mission-Grade Durability – Designed for adverse weather, rugged terrain, and repeated field use.	**Built tough** – Rain, mud, and bad decisions don't scare it.
Simplified Deployment – Fast-access latching system.	**Open and go** – No PhD in latch mechanics required.
Compartmental Efficiency – 4 small, 2 medium, 1 large with secure lids.	**Chaos control** – A spot for hooks, snacks, and that one lure you swear works.
Low-Mass Advantage – 3.8 oz total weight for reduced carry fatigue.	**Feather-light** – Lighter than your buddy's excuse for missing the big catch.
Secure Containment – Lid retention prevents gear loss during movement.	**No spills** – Lids lock tighter than grandma's pickle jars.

About Ridge Runner Gear

At Ridge Runner Gear, we believe you shouldn't have to choose between comfort and capability. Our gear is meticulously engineered for those who seek the serenity of the wilderness without sacrificing the sophistication of well-designed essentials. Whether you're setting up a base camp beneath alpine stars or trekking toward your next breathtaking vista, our products deliver premium performance with minimalist weight. Because luxury isn't about excess—it's about excellence, wherever the trail leads.

We are a faith-based company, guided by Christian values in everything we do—from the way we design our gear to how we serve our customers. We believe the outdoors is one of God's greatest gifts, and we're passionate about helping others enjoy it responsibly and respectfully. That's why we practice Leave No Trace principles and strive to be good stewards of the wild places we love.

Proudly American Made, our gear is built with rugged durability and refined utility for the serious adventurer.

Thank you for supporting our dream and being part of the Ridge Runner journey. With your support, we get to build gear we love—for adventures you'll never forget.

Dimensions

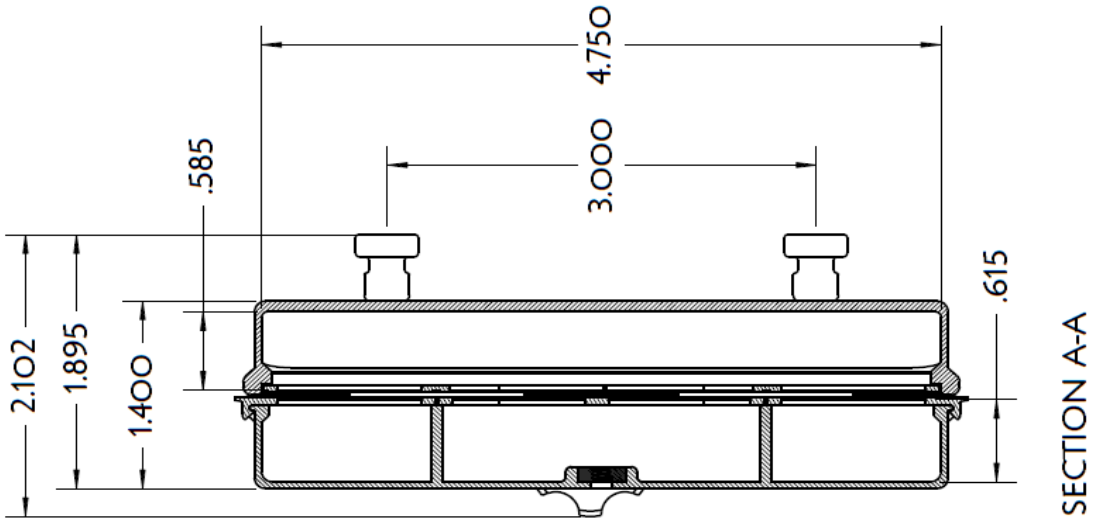
4.750
3.000
.585
2.102
1.895
1.400
.615
SECTION A-A

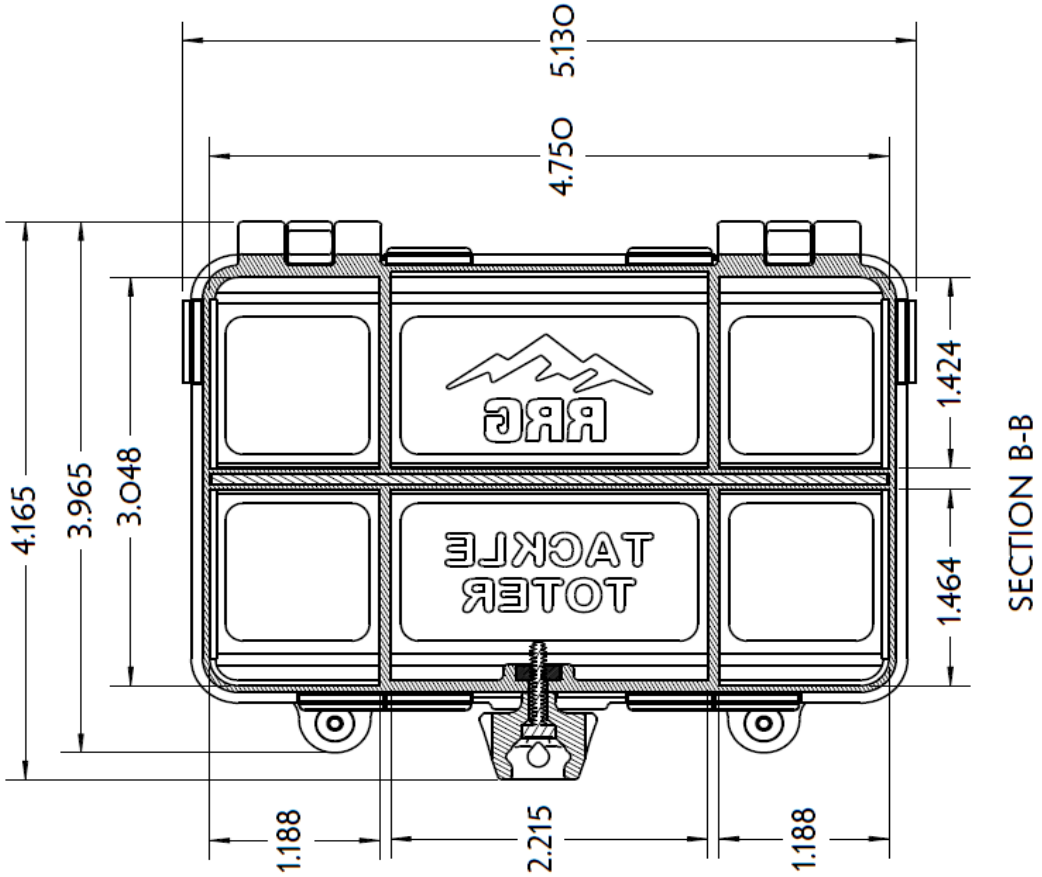
5.130
4.750
4.165
3.965
3.048
1.424
1.464
1.188
2.215
1.188
SECTION B-B

Identification

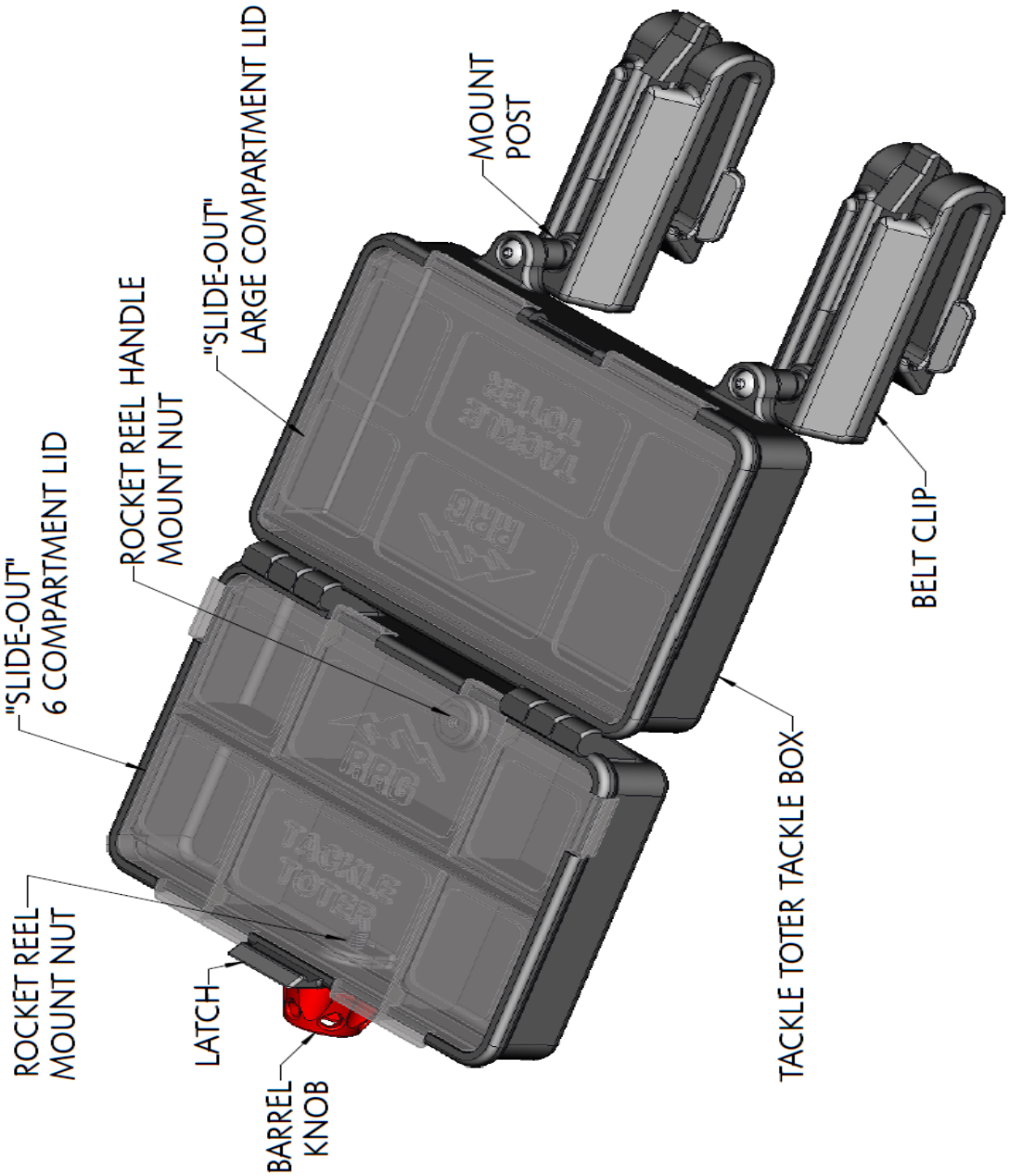

Assembly & Operation Instructions — Tackle Toter

- **Engage the Mighty Latch:** Place a finger under the bottom lip of the latch (use your own finger, not your buddy's) and lift gently off the catch. Congratulations, you've just opened the lid without breaking anything.

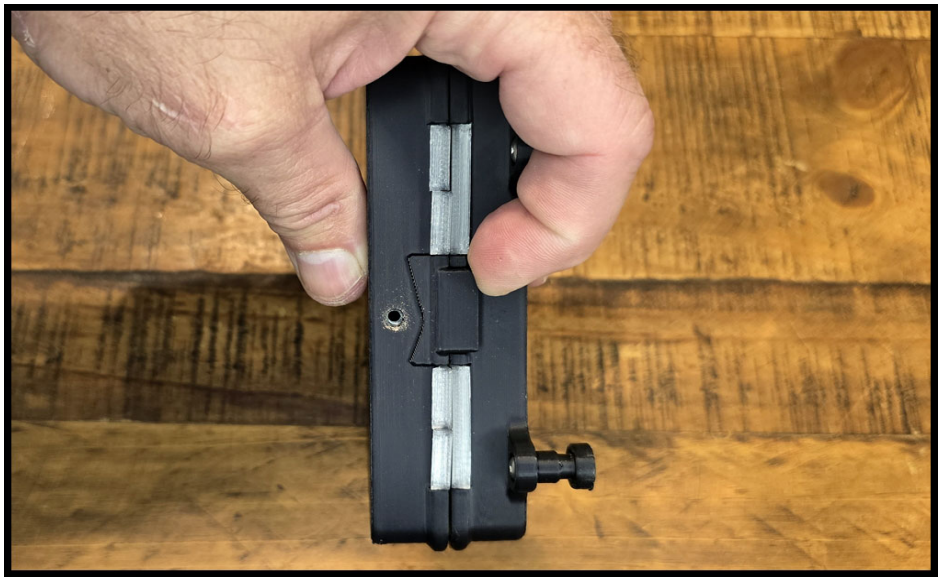

- **Access the Compartments of Destiny:** Repeat the same heroic maneuver on each compartment lid. Pull up to open and unsnap the lid from its catch. Feel free to whisper *"open sesame"* for added effect.

- **The Great Lid Escape:** If you need to completely remove a lid (for cleaning, customization, or dramatic flair), pull straight up at the hinged side. The lid will slide out smoother than a catfish from a greased skillet.

- **Reverse the Chaos:** To reattach the lid, slide the hinge side back into place and snap the catch closed. That's it—you're back in business faster than your uncle can say, *"One more cast."*

Mounting the Tackle Toter to Belt Clips

- **Thread the Needle:** Slide two belt clips down onto your belt spaced about three inches apart. (Don't eyeball it too bad, unless you like crooked gear.)
- **Lock and Load:** Line up the quick-mount posts with the clips and slide 'em in until you hear that sweet *click.*

- **MOLLE Compatibility:** The clip spacing is designed to fit standard MOLLE webbing. Translation: it'll ride just fine on tactical packs, vests, or that one buddy's overbuilt fishing chair.

Pro Tip: Use a butter knife to guard the clip lip when pulling from MOLLE webbing. Quick out, no snag.

- **Free the Toter:** Press the release tab on the belt clips, then remove the Tackle Toter.

Pro Tip: Snag a few extra belt clips and set them up in multiple spots. That way, you can quick-mount your Toter wherever the fish (or your laziness) takes you.

Mounting the Rocket Reel to the Tackle Toter

- **Handle Off, Adventure On:** Remove the handle from your Rocket Reel. Don't worry—it'll be back in action faster than Uncle Earl at an all-you-can-eat buffet.

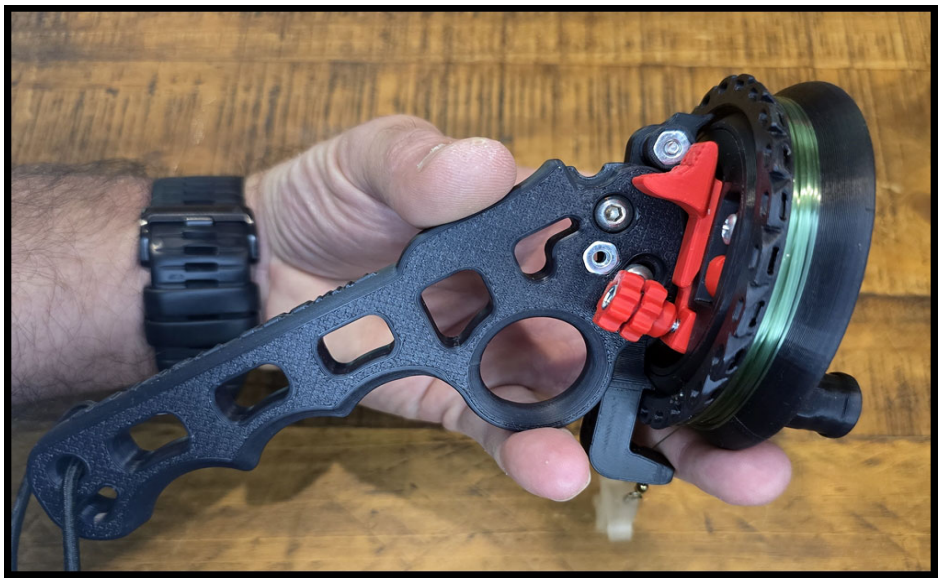

- **Barrel Knob Magic:** Grab your Timber Tickler barrel knob and thread the reel into the hole just above the latch. **Pro tip:** line up the reel's line bracket with the indention below the latch.

- **Honeycomb Handle Hack:** Take the honeycomb knob, slide it through one of the Tackle Toter's handle cutouts, and tighten it down to attach the Rocket Reel handle. Boom—your Toter is now reel-ready, battle-hardened, and probably smarter than your fishing buddy's rig.

Mounting the Tackle Toter on the Tack Rack

- **Clamp It Down:** Mount the Tack Rack to the right-side leg of your chair using the clamp. Tighten it up—this ain't the time for "good enough."
- **Level the Playing Field:** Adjust the angle of the Tack Rack arm until it's running parallel with the ground. If it looks like a ski jump, you've gone too far.

- **Slide ‘n’ Secure:** Slide both Tackle Toter posts into the open slots on the Tack Rack. (Bonus feature: it works with posts on top or bottom, depending on how fancy you feel.)

- **Sit Back and Grin:** Your Tackle Toter is now chair-mounted, snack-accessible, and perfectly placed for bragging to your fishing buddies.

Mounting the Tackle Toter to the Yak Rack

- **Align the Slots:** Slide the Yak Rack’s locking plate until the top and bottom slots line up. Think of it like aligning planets—but with more fishing payoff.

- **Drop and Dock:** With the Tackle Toter's posts facing downward, slide them into both slots. If you miss, just blame "rough water conditions," even if you're still in the driveway.
- **Lock 'n' Rock:** Slide the Yak Rack plate back into place to lock the posts. Now your Toter is racked, stacked, and yak-attack ready.

Tackle Toter Tips & Tricks

- **Pop the Tops:** Remove the compartment lids when organizing. It's like cleaning the garage—easier when the doors are wide open.
- **Keep It Clipped:** Leave the Toter mounted to your belt while using it. The lids are designed to hold gear tight, even when the box is hanging vertical. (Gravity: defeated.)
- **Clip & Go:** Snag extra belt clips so you can transfer the box from backpack to belt in seconds. Tactical-level convenience without the boot camp.
- **Pack Smarter:** Own multiple Toter models and load them for different missions. One for trout, one for bass, one for "just snacks."
- **Beyond the Bank:** Use it at home to organize backpacking gear, utility odds and ends, or even that mystery drawer in the kitchen.

Care & Feeding of Your Tackle Toter (Because Even Boxes Deserve TLC)

- **Keep it clean:** Shake out dirt, bait crumbs, and mystery goo after each trip. A clean Toter carries more than just regrets.
- **No chemical warfare:** Wash with mild soap and water. Harsh chemicals are for super villains, not your tackle box.
- **Dry it off:** Moisture and plastic don't mix well. Put it away wet and don't be shocked when it smells like swamp funk.
- **Check your clips:** Give those belt clips, posts, and lids a once-over. A little wiggle check today saves a garage-floor yard sale tomorrow.
- **Cool it, cowboy:** ASA plastic is rugged and UV-resistant, but it ain't indestructible. Don't bake it in a hot car or leave it in the campfire circle—unless you're into abstract art.
- **Store smart:** Snap the lids closed before tossing it in your pack. Your gear, snacks, and dignity will thank you.

Need Parts? Want to Chat?

To purchase replacement parts contact us at:
www.rrgruntheridge.com

Final Words of Wisdom

- A Tackle Toter won't catch fish for you, but it will hold every shiny thing you think *will*.
- The lighter it feels, the heavier the stories you'll tell later.
- Organization is just controlled chaos—embrace it, but snap those lids tight.
- Extra belt clips are like potato chips: you'll always want more.
- When in doubt, clip it, snap it, and fish on.

Remember: The Tackle Toter isn't just a box—it's a loyal sidekick. Treat it right, and it'll carry your tackle, your snacks, and maybe even your pride after that "one that got away."

DRAWING #
700368-01

ITEM	QTY	PART #	DESCRIPTION
1	1	700195-05	LID, TACKLE BOX COMPARTMENT
2	1	700195-06	LID, TACKLE BOX COMPARTMENT
3	2	700199-01	CLIP, BELT
4	1	700346-01	ASSY, BARREL KNOB
5	2	700350-01	ASSY, POST
6	1	700367-01	BOX, S7C TACKLE TOTER

REV NO	DATE	DESCRIPTION	ECN NO	BY

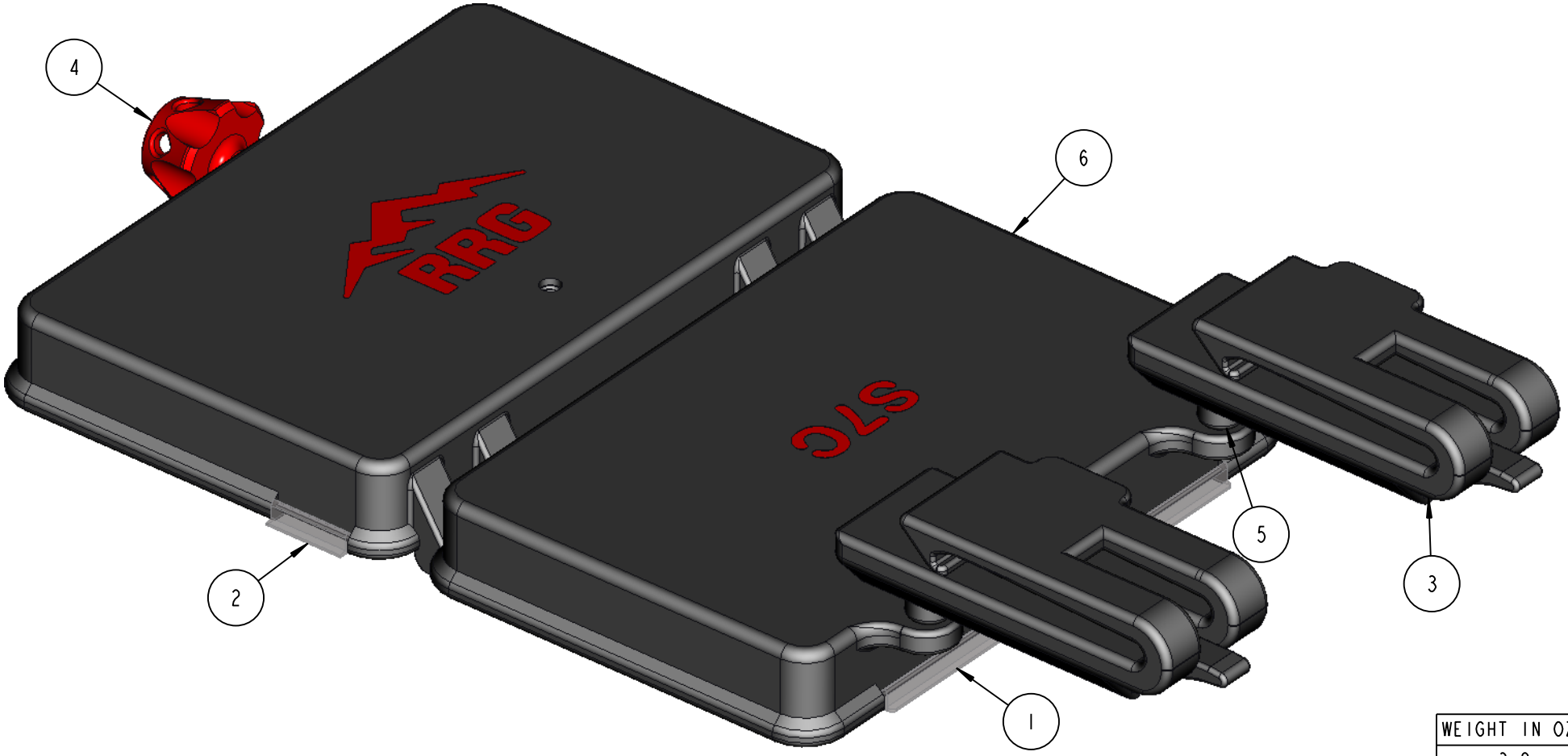

WEIGHT IN OZ.
3.8

DRAWN BY: A KEY	SCALE 1.000	DIMENSIONAL TOLERANCES UNLESS OTHERWISE NOTED (.XX .01, .XXX .005, ANG. .5)	MATERIAL: N/A	THIRD ANGLE PROJECTION	PROPRIETARY AND CONFIDENTIAL NO PORTION OF THIS DRAWING MAY BE QUOTED OR REPRODUCED IN ANY FORM WITHOUT THE EXPRESS WRITTEN PERMISSION OF RIDGE RUNNER GEAR, LLC. CANTON, GA 30114 USA
CHECKED BY:	DATE Sep-11-25	REMOVE ALL BURRS AND SHARP EDGES UNLESS OTHERWISE NOTED	HEAT TREAT: N/A	MODEL: TOTER	TITLE: ASSY, S7C TACKLE TOTER BOX
TRACED BY:	MASTER	ALL DIMENSIONS ARE FINISHED DIMENSIONS. DO NOT SCALE - WORK TO DIMENSIONS ONLY	FINISH: N/A	SHEET NO.: 2OF5	DRAWING # 700368-01

RIDGE RUNNER

DRAWING #
700368-01

ITEM	QTY	PART #	DESCRIPTION
1	1	700195-05	LID, TACKLE BOX COMPARTMENT
2	1	700195-06	LID, TACKLE BOX COMPARTMENT
3	2	700199-01	CLIP, BELT
4	1	700346-01	ASSY, BARREL KNOB
5	2	700350-01	ASSY, POST
6	1	700367-01	BOX, S7C TACKLE TOTER

REV NO	DATE	DESCRIPTION	ECN NO	BY

WEIGHT IN OZ.
N/A

DRAWN BY: A KEY	SCALE 1.000	DIMENSIONAL TOLERANCES UNLESS OTHERWISE NOTED .XX .01 / .XXX .005 / ANG. .5	MATERIAL: N/A	THIRD ANGLE PROJECTION	PROPRIETARY AND CONFIDENTIAL NO PORTION OF THIS DRAWING MAY BE QUOTED OR REPRODUCED IN ANY FORM WITHOUT THE EXPRESS WRITTEN PERMISSION OF RIDGE RUNNER GEAR, LLC. CANTON, GA 30114 USA
CHECKED BY:	DATE Sep-11-25	REMOVE ALL BURRS AND SHARP EDGES UNLESS OTHERWISE NOTED	HEAT TREAT: N/A	MODEL: TOTER	TITLE: ASSY, S7C TACKLE TOTER BOX
TRACED BY:	MASTER	ALL DIMENSIONS ARE FINISHED DIMENSIONS DO NOT SCALE - WORK TO DIMENSIONS ONLY	FINISH: N/A	SHEET NO.: 1 OF 5	DRAWING # 700368-01

RIDGE RUNNER

Trick Out Your Tackle Toter: Optional Gear for Overachievers

Yak Rack: Your Kayak's New MVP

The Yak Rack turns your kayak into a fully loaded fishing machine! It mounts your Rocket Reel and Tackle Toter tackle box right into standard T-slots—no drilling, no fuss. With the same trusty trigger mechanism as the Reel Rack, plus a quick-lock sliding arm to secure your tackle box, everything stays put even when the action heats up. The articulated mount adjusts to your setup and pops off quickly when it's time to pack up. Paddle, cast, conquer—yak-style.

Tack Rack:Your Chair's Tackle Sidekick

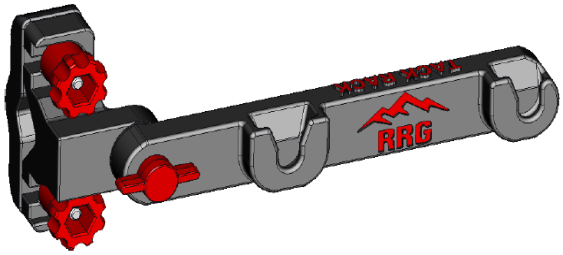

The Tack Rack keeps your Tackle Toter right where you need it—mounted to your camp chair or any round pole for hands-free, hassle-free access. It's ultra-lightweight, packs down easy, and holds your tackle box snug so it won't budge... until you want it to. Sit back, relax, and let your chair do the organizing.

Rocket Reel:Your Cast-Anywhere Ticket to Dinner

Why pack two handles when one will do it all? Clip in the Rocket Reel kit and watch your Timber Tickler handle transform from a branch-busting saw grip into a fish-wrangling reel holder. One minute you're clearing campfire wood, the next you're pulling dinner out of the creek like a backwoods magician. It still fits the Ridge Runner belt clip system, so you can swap from "Paul Bunyan mode" to "Old Man and the Sea" in seconds flat — no toolbox, no hassle, just pure outdoorsy showmanship.

Reel Rack: Hands-Free Fishing, Anywhere

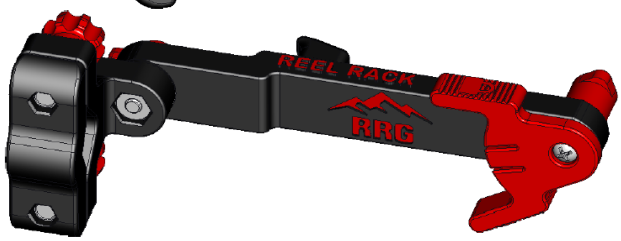

Turn any camp chair or pole into your personal fishing throne with the Reel Rack! This ultralight mount securely holds your Rocket Reel in place while you kick back and relax. The positive trigger mechanism gives you lightning-fast release when it's time to fight that fish. Super lightweight, rock-solid, and ridiculously convenient—because your hands deserve a break too.

Timber Tickler: One Handle, Endless Possibilities

Meet the Timber Tickler—the ultralight backpacking saw that moonlights as your Rocket Reel handle. Designed for serious weight savers, it breaks down to blade-length size for compact carry. With five scabbard-style sheath options (6", 9", and 12" blades available), it attaches to the same quick-release belt clip as your other RRG gear. The handle snaps to the sheath and locks tight with a clever wedge system—no wiggle, all wow. One handle + multiple blade sheaths = one smart, versatile saw that saves pack space *and* cash.

Don't just hike it — run the ridge at www.rrgruntheridge.com

Legal Notices & Policies

Copyright & Use Disclaimer

All content, images, instructions, and designs in this manual are the property of Ridge Runner Gear. Unauthorized reproduction, distribution, or commercial use of any part of this manual or product design is not permitted without written permission.
© 2025 Ridge Runner Gear. All rights reserved.

Liability Disclaimer

Ridge Runner Gear assumes no responsibility for any injury, damage, or loss resulting from the use or misuse of the Tackle Toter. Users are responsible for understanding and following all instructions provided in this manual. Fishing and outdoor activities involve inherent risks, including but not limited to handling sharp hooks, carrying gear, tripping over your own tackle box, and explaining to your spouse why you bought “just one more lure.” Always exercise caution and use the Tackle Toter at your own risk.

Limited Warranty

Ridge Runner Gear warrants the Tackle Toter to be free from defects in materials and workmanship under normal use for a period of 90 days from the date of purchase. This warranty applies only to the original purchaser and does not cover damage caused by misuse, abuse, modifications, improper maintenance, or normal wear and tear.
If a defect arises during the warranty period, Ridge Runner Gear will, at its discretion, repair or replace the defective part with proof of purchase. To submit a warranty claim, contact us at: www.rrgruntheridge.com

Return Policy

If you're not completely satisfied with your Tackle Toter, you may return it within 30 days of purchase for a full refund or exchange. All returns must include an RMA (Return Merchandise Authorization) number. Items must be returned in unused condition with original packaging. Return shipping is the responsibility of the customer unless the product arrived damaged or defective. To initiate a return or exchange, contact us at: www.rrgruntheridge.com

A Word on 3D Printing

Our gear is proudly 3D printed, which means you may spot layer lines, tiny gaps, or slight weight differences. These are natural traits of the process and do not affect strength or performance. Color tones may also vary from batch to batch. While Ridge Runner Gear is a function over form company, we still care about aesthetics and hold every product to the highest standards possible. In short: it may not look like it came from a spaceship factory, but it’ll perform like it belongs on your next adventure.