Tack Rack

by Ridge Runner Gear, LLC

RUN THE RIDGE

(and don't forget your Tackle Toter)

Operator's Guide: Because your tackle box deserves a seat at the party too.

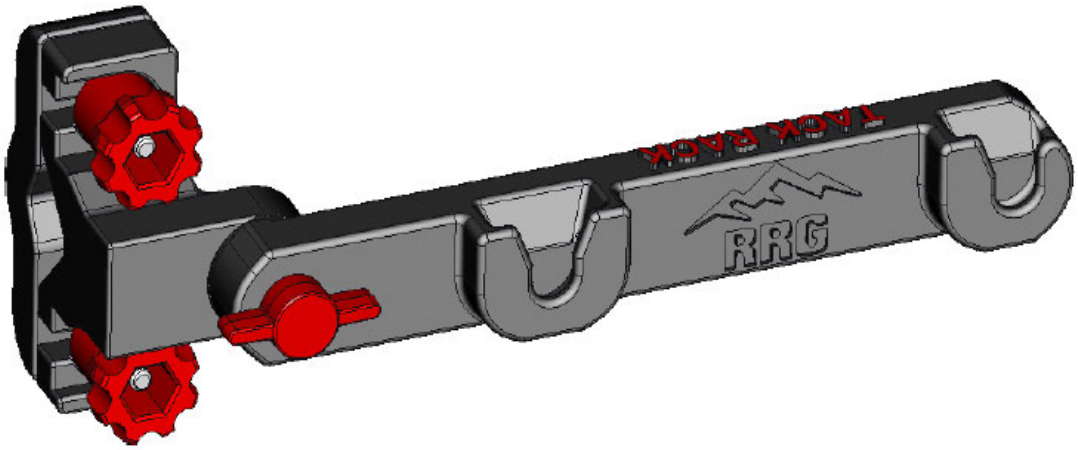

Product Name: Tack Rack Brand: Ridge Runner Gear (RRG)

Model Number: TR1
Weight: 1.85 oz (Lighter than the excuses for not catching fish today.)
Dimensions: 6.0" L x 2.3" W x 2.4" H (Shorter than your patience waiting on a bite.)
Materials: ASA, stainless steel (Stronger than your last excuse for coming home late.)
Pole Diameter Range: 1/2" (.500) to 13/16" (.812)

What Is This Magical Contraption?

Say hello to the Tack Rack — a hands-free tackle box holder with more grit than a catfish in a mud hole. Strap it to a chair, pole, or anything rounder than your uncle's belly at the fish fry, and boom — instant tackle valet. Slide in your Tackle Toter, lean back like a shoreline boss, and keep your hands free for casting, cocoa sipping, or defending your sandwich from camp critters. It's compact, it's feather-light, and it makes you look like the most organized angler on the ridge (even if your truck bed says otherwise).

NOTICE: Reading this first beats chasing your Tackle Toter, buying a new chair, or explaining how you face-planted trying to balance it in your lap. Sit pretty with know-how before sittin' pretty with your Tack Rack.

Why the Tack Rack is Smarter Than Your Average Tackle Box Holder

Field Manual Spec	Civilian Translation
Operational Versatility – Attaches to camp chairs, poles and just about anything round.	**Mounts anywhere –** Chair, pole, fence post… maybe even cousin Jimmy's walking stick.
Compact Portability – Small footprint with maximum function.	**Tiny but handy –** Packs smaller than a sandwich, works bigger than a toolbox.
Mission-Grade Durability – Built from tough materials to handle rain, sun, and campsite clumsiness.	**Built tough –** Weatherproof and whoops-proof.
Simplified Deployment – Quick-mount system with secure clamp.	**Clamp and chill –** Easier than popping open a root beer.
Rapid Release Removal– Slide out design for lightning-fast reel removal.	**Snag-free speed –** Faster than a cat spotting the can opener.
Low-Mass Advantage – Weighs in at just 2.0 ounces.	**Feather-light –** Lighter than the marshmallow you dropped in the fire.
Secure Containment – Tight tolerances lock your Tackle Toter firmly in place.	**Toter stays put –** Holds tighter than a tick on a hound.

About Ridge Runner Gear

At Ridge Runner Gear, we believe you shouldn't have to choose between comfort and capability. Our gear is meticulously engineered for those who seek the serenity of the wilderness without sacrificing the sophistication of well-designed essentials. Whether you're setting up a base camp beneath alpine stars or trekking toward your next breathtaking vista, our products deliver premium performance with minimalist weight. Because luxury isn't about excess—it's about excellence, wherever the trail leads.

We are a faith-based company, guided by Christian values in everything we do—from the way we design our gear to how we serve our customers. We believe the outdoors is one of God's greatest gifts, and we're passionate about helping others enjoy it responsibly and respectfully. That's why we practice Leave No Trace principles and strive to be good stewards of the wild places we love.

Proudly American Made, our gear is built with rugged durability and refined utility for the serious adventurer.

Thank you for supporting our dream and being part of the Ridge Runner journey. With your support, we get to build gear we love—for adventures you'll never forget.

Dimensions

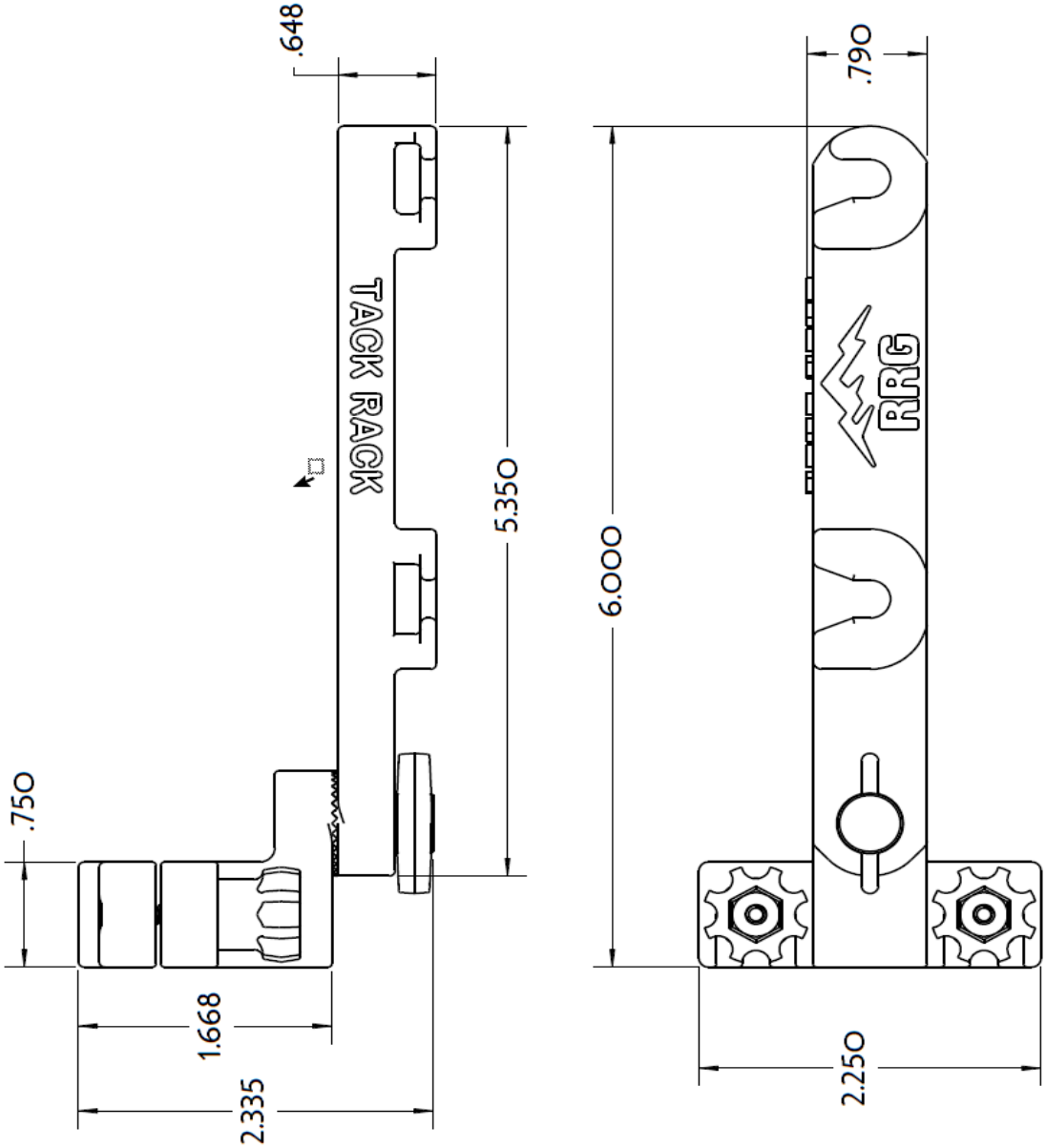

Identification

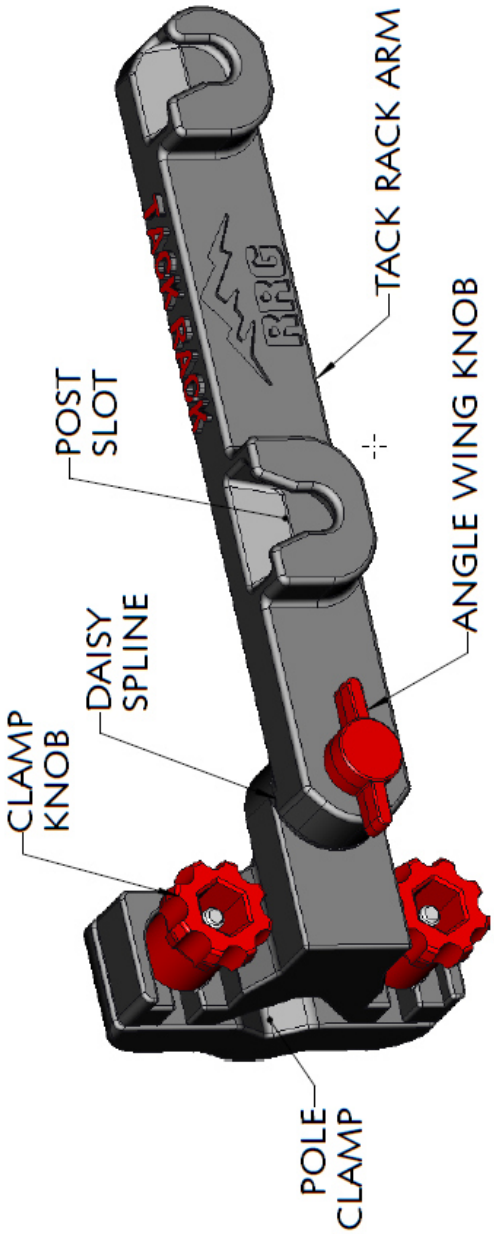

Assembly & Operation Instructions — Tack Rack

Assembly

- Loosen the **clamp knobs** and slide out the pole clamp.
  (Think of it like loosening your belt after a fish fry — just enough to make room.)

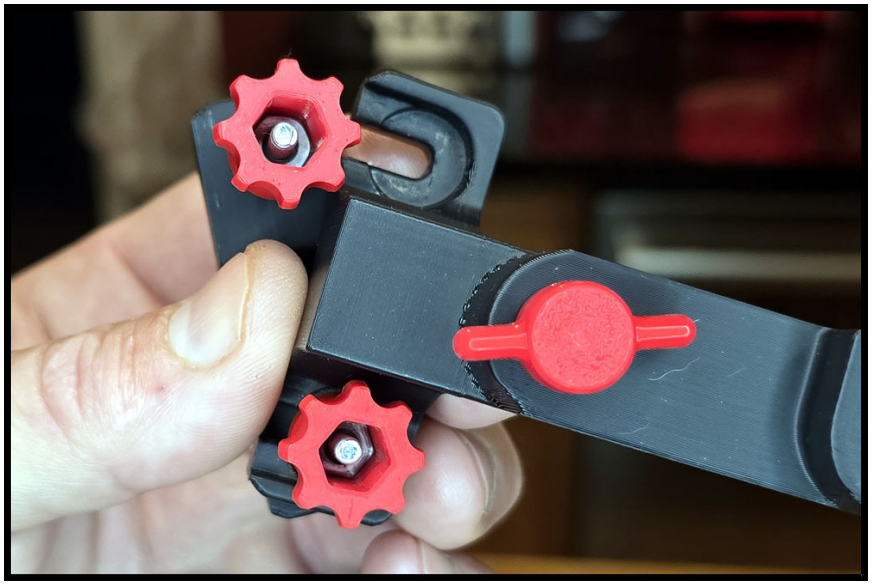

- Place the **Tack Rack** onto your chair arm support pole.
  (Yes, the chair — not Uncle Earl's walking stick.)

- Slide the **pole clamp** back in and tighten the clamp knobs.
  (Clamp it firm so the fish don't swivel your setup like a weather vane.)

- Loosen the **angle wing knob** and rotate the arm to your favorite angle.
  (Because comfort matters — you're fishin', not runnin' a drill press.)

- Tighten the **angle wing knob**.
  (The geared spline locks it in, so no need to crank it like you're wringing water out of overalls.)

Operation

- Slide the **Tack Rack Mount Post** into the post slots, making sure they are fully seated. *(If it fits, you're doin' it right — no duct tape required.)*

- Lift the Tackle Toter to remove and that's it.

Pro Tip: *Mount your Tackle Toter with the bottom up or down—dealer's choice.*

Tack Rack Tips & Tricks

- **Find Your Sweet Spot** – Adjust the arm angle so your Tackle Toter sits where it feels natural. *(If you're stretchin' like a yoga class to reach it, you're doin' it wrong.)*
- **Snug, Not Hulk** – Tighten the knobs until it holds steady. *(It ain't a jar of grandma's pickles — no need to crank down with both hands.)*
- **Travel Light** – At just 1.85 ounces, toss it in your pack, glove box, or tackle bag. *(It's lighter than the excuses for "the one that got away.")*
- **Hands-Free Happiness** – Use the extra freedom for snacks, strummin' a campfire tune, or teachin' the kids to untangle their own line.

Care & Feeding of Your Tack Rack (Because Even Racks Deserve TLC)

- **Keep it clean:** Knock off dirt, fish scales, and snack crumbs after each trip. A clean Tack Rack holds reels, not yesterday's regrets.
- **Soap, not science experiments:** Rinse with mild soap and water. Harsh chemicals are for mad scientists, not fishing gear.
- **Dry it off:** Water and plastic ain't best friends. Put it away soaked, and you'll get Eau de Swamp in no time.
- **Check your knobs:** Give the clamps and arm a wiggle test now and then. A quick once-over today beats explainin' to your buddies why your tackle box took a dive.
- **Don't roast it:** ASA plastic's tough and UV-resistant, but it ain't cast iron. Don't bake it in a hot truck or leave it by the fire pit unless you want modern art.
- **Lube it up:** A little quick drying silicone spray (***MVP**: WD-40 Specialist*) on the moving parts keeps things slicker than a catfish in a kiddie pool.

Need Parts? Want to Chat?

To purchase replacement parts contact us at:
www.rrgruntheridge.com

Final Words of Wisdom

Run the Ridge, respect the gear, and may your fish stories grow bigger every season.

DRAWING #
700375-02

ITEM	QTY	PART #	DESCRIPTION
1	1	700224-02	ASSY, POLE CLAMP
2	1	700235-01	ASSY, KNOB WING 10-32X.75
3	1	700372-02	ARM, TACK RACK

REV NO	DATE	DESCRIPTION	ECN NO	BY

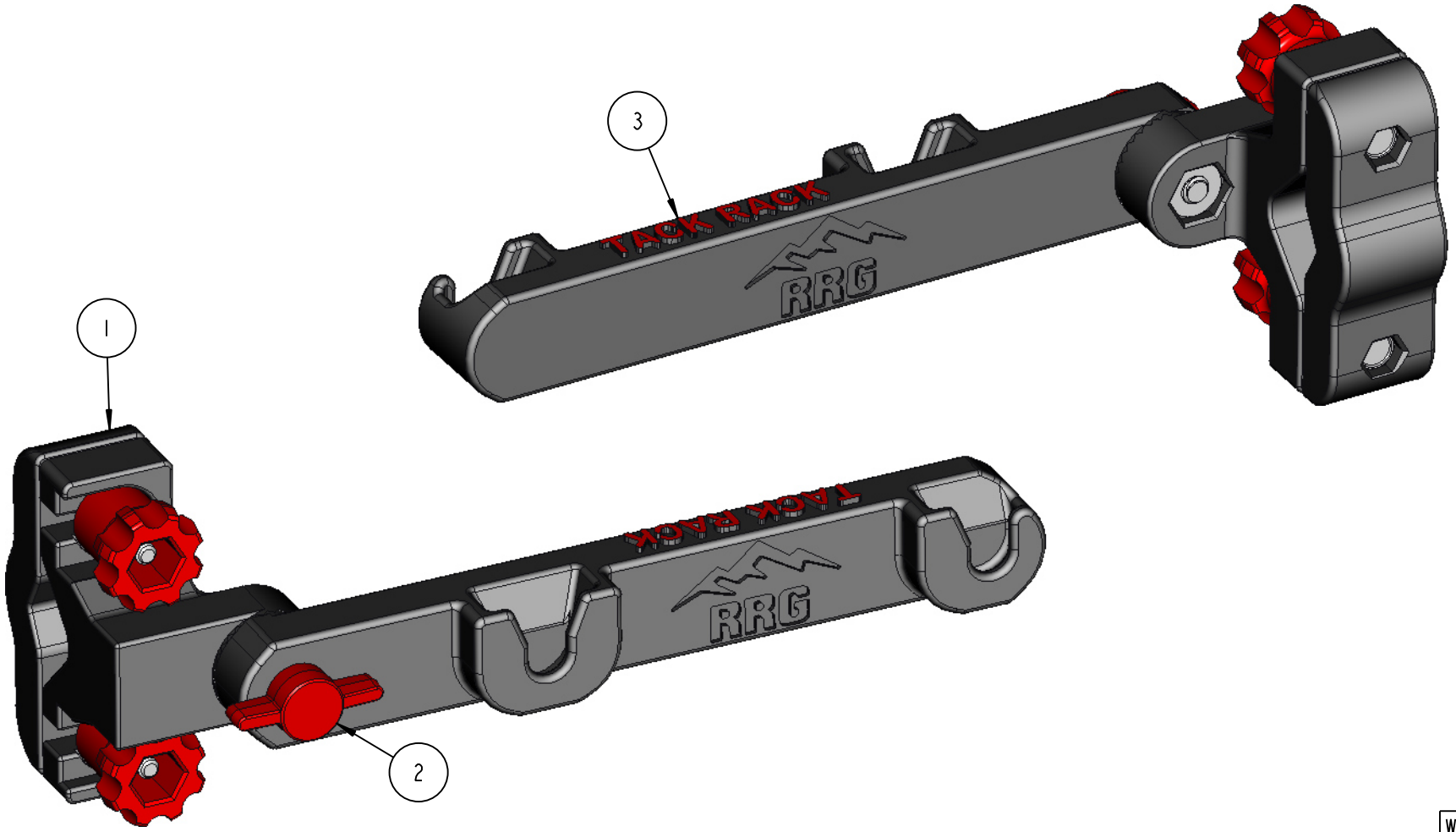

WEIGHT IN OZ.
1.85

DRAWN BY: A KEY	SCALE 1.000	DIMENSIONAL TOLERANCES UNLESS OTHERWISE NOTED .XX .01 / .XXX .005 / ANG. .5	MATERIAL: N/A	THIRD ANGLE PROJECTION	PROPRIETARY AND CONFIDENTIAL NO PORTION OF THIS DRAWING MAY BE QUOTED OR REPRODUCED IN ANY FORM WITHOUT THE EXPRESS WRITTEN PERMISSION OF RIDGE RUNNER GEAR, LLC. CANTON, GA 30114 USA
CHECKED BY:	DATE Sep-16-25	REMOVE ALL BURRS AND SHARP EDGES UNLESS OTHERWISE NOTED	HEAT TREAT: N/A	MODEL: TACKRACK	TITLE: ASSY, TACK RACK
TRACED BY:	MASTER	ALL DIMENSIONS ARE FINISHED DIMENSIONS DO NOT SCALE - WORK TO DIMENSIONS ONLY	FINISH: N/A	SHEET NO.: 1 OF 5	DRAWING # 700375-02

RIDGE RUNNER

DRAWING #
700224-02

REV NO	DATE	DESCRIPTION	ECN NO	BY

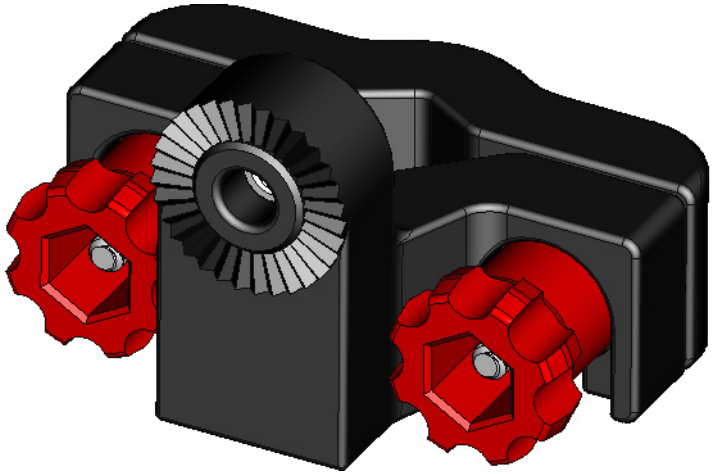

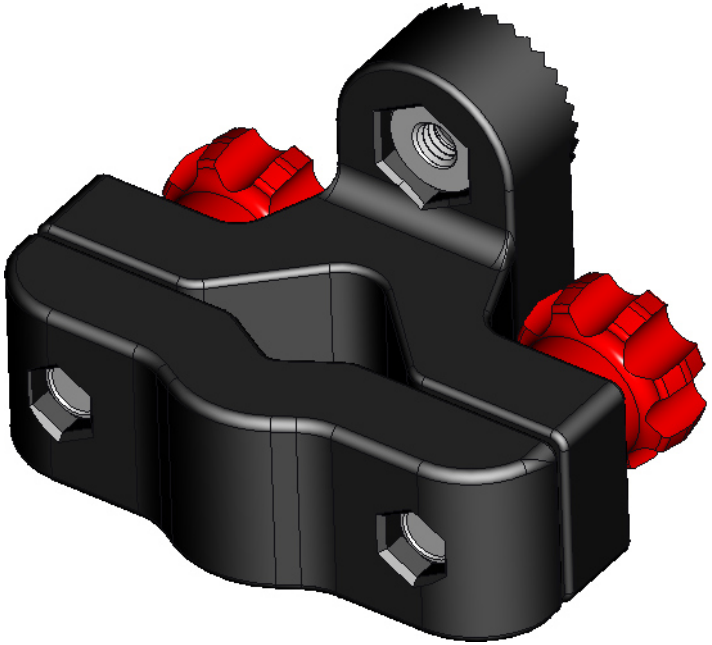

WEIGHT IN OZ.
1.0

DRAWN BY: A KEY	SCALE 1.500	DIMENSIONAL TOLERANCES UNLESS OTHERWISE NOTED .XX .01 / .XXX .005 / ANG. .5	MATERIAL: N/A	THIRD ANGLE PROJECTION	PROPRIETARY AND CONFIDENTIAL NO PORTION OF THIS DRAWING MAY BE QUOTED OR REPRODUCED IN ANY FORM WITHOUT THE EXPRESS WRITTEN PERMISSION OF RIDGE RUNNER GEAR, LLC. CANTON, GA 30114 USA
CHECKED BY:	DATE Apr-06-26	REMOVE ALL BURRS AND SHARP EDGES UNLESS OTHERWISE NOTED	HEAT TREAT: N/A	MODEL: RACK	TITLE: ASSY, POLE CLAMP
TRACED BY:	MASTER	ALL DIMENSIONS ARE FINISHED DIMENSIONS DO NOT SCALE - WORK TO DIMENSIONS ONLY	FINISH: N/A	SHEET NO.: 2OF2	DRAWING # 700224-02

RIDGE RUNNER

Trick Out Your Tack Rack: Optional Gear for Overachievers

Yak Rack: Your Kayak's New MVP

The Yak Rack turns your kayak into a fully loaded fishing machine! It mounts your Rocket Reel and Tackle Toter tackle box right into standard T-slots—no drilling, no fuss. With the same trusty trigger mechanism as the Reel Rack, plus a quick-lock sliding arm to secure your tackle box, everything stays put even when the action heats up. The articulated mount adjusts to your setup and pops off quickly when it's time to pack up. Paddle, cast, conquer—yak-style.

Reel Rack: Hands-Free Fishing, Anywhere

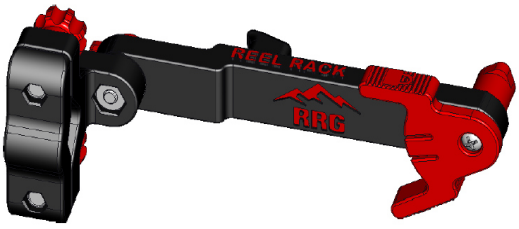

Turn any camp chair or pole into your personal fishing throne with the Reel Rack! This ultralight mount securely holds your Rocket Reel in place while you kick back and relax. The positive trigger mechanism gives you lightning-fast release when it's time to fight that fish. Super lightweight, rock-solid, and ridiculously convenient—because your hands deserve a break too.

Rocket Reel:Your Cast-Anywhere Ticket to Dinner

Why pack two handles when one will do it all? Clip in the Rocket Reel kit and watch your Timber Tickler handle transform from a branch-busting saw grip into a fish-wrangling reel holder. One minute you're clearing campfire wood, the next you're pulling dinner out of the creek like a backwoods magician. It still fits the Ridge Runner belt clip system, so you can swap from "Paul Bunyan mode" to "Old Man and the Sea" in seconds flat — no toolbox, no hassle, just pure outdoorsy showmanship.

Tackle Toter: Your Belt-Mounted Bait Boss

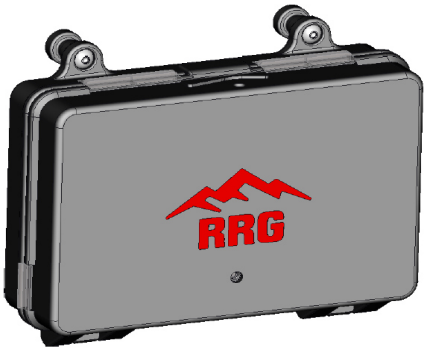

Meet the Tackle Toter—the tactical-grade tackle box that does it all. Your Rocket Reel snaps apart and mounts right to the front, making you ready to cast at a moment's notice. It clips onto quick-release belt mounts, fits standard MOLLE webbing like a glove, and connects seamlessly to the Yak Rack or Tack Rack for kayak or camp chair fishing. Use it while strapped to your belt like a true backcountry commando. Available in five models with up to 12 individually covered compartments—because organized chaos is still chaos.

Timber Tickler: One Handle, Endless Possibilities

Meet the Timber Tickler—the ultralight backpacking saw that moonlights as your Rocket Reel handle. Designed for serious weight savers, it breaks down to blade-length size for compact carry. With five scabbard-style sheath options (6", 9", and 12" blades available), it attaches to the same quick-release belt clip as your other RRG gear. The handle snaps to the sheath and locks tight with a clever wedge system—no wiggle, all wow. One handle + multiple blade sheaths = one smart, versatile saw that saves pack space *and* cash.

Don't just hike it — run the ridge at
www.rrgruntheridge.com

Legal Notices & Policies

Copyright & Use Disclaimer

All content, images, instructions, and designs in this manual are the property of Ridge Runner Gear. Unauthorized reproduction, distribution, or commercial use of any part of this manual or product design is not permitted without written permission.
© 2025 Ridge Runner Gear. All rights reserved.

Liability Disclaimer

Ridge Runner Gear assumes no responsibility for any injury, damage, or loss resulting from the use or misuse of the Tack Rack. Users are responsible for reading and following all instructions provided in this manual. Fishing and outdoor activities involve inherent risks, including but not limited to sharp hooks, slippery banks, stubborn fish, and the occasional toppled camp chair. The Tack Rack holds your reel — not your common sense. Always exercise caution, fish responsibly, and remember: it won't help explain to your spouse why you spent the grocery money on "just one more lure." Use the Tack Rack at your own risk.

Limited Warranty

Ridge Runner Gear warrants the Tack Rack to be free from defects in materials and workmanship under normal use for a period of 90 days from the date of purchase. This warranty applies only to the original purchaser and does not cover damage caused by misuse, abuse, modifications, improper maintenance, or normal wear and tear.
If a defect arises during the warranty period, Ridge Runner Gear will, at its discretion, repair or replace the defective part with proof of purchase. To submit a warranty claim, contact us at: www.rrgruntheridge.com

Return Policy

If you're not completely satisfied with your Tack Rack, you may return it within 30 days of purchase for a full refund or exchange. All returns must include an RMA (Return Merchandise Authorization) number. Items must be returned in unused condition with original packaging. Return shipping is the responsibility of the customer unless the product arrived damaged or defective. To initiate a return or exchange, contact us at: www.rrgruntheridge.com

A Word on 3D Printing

Our gear is proudly 3D printed, which means you may spot layer lines, tiny gaps, or slight weight differences. These are natural traits of the process and do not affect strength or performance. Color tones may also vary from batch to batch. While Ridge Runner Gear is a function over form company, we still care about aesthetics and hold every product to the highest standards possible. In short: it may not look like it came from a spaceship factory, but it'll perform like it belongs on your next adventure.