# Blaster Master

## by Ridge Runner Gear, LLC

**RUN THE RIDGE**

**(and aim for glory, not chafing )**

**Operator's Guide: Because "leave no trace" applies to you too.**

**Product Name: Blaster Master  Brand: Ridge Runner Gear (RRG)**

**Model Number:** BM-CYA
**Weight:** 1.15 oz (Lighter than the relief you'll feel after using it.)
**Dimensions:** 1.8" L  x 1.6" W x 1.4" H (Takes up less space than your emergency TP stash.)
**Materials:** ASA, TPU (Built for when nature calls collect.)
**Bottle Fitment:** Any PET bottle (SmartWater, trail water, or that gas station special).

## What Is This Magical Contraption?

Say hello to the **Blaster Master** — a three-in-one trail hygiene hero with more aim than Uncle Earl after too much sweet tea. Twist it onto any PET bottle (SmartWater, gas station mystery brand, you name it) and unlock shower mode, bidet mode, or just good old leak-proof cap mode. Clip it to your RRG belt like a true backcountry wizard, and boom — instant freshness at your hip. The keyed lanyard points the arrow where it counts, so you don't end up watering the wrong wildflowers. It's compact, it's lighter than your excuses for skipping TP, and it makes you look like the cleanest hiker on the ridge (even if your socks say otherwise).

**NOTICE:** Reading this operator's manual first beats blasting your buddy, baptizing your boots, or earning the nickname "Splashback Jack."

# Why the Blaster Master is Smarter Than Your Average Bottle Cap Bidet

| Field Manual Spec | Civilian Translation |
|---|---|
| **Operational Versatility –** Three functions in one: shower stream, bidet spray, and leak proof cap. | **Triple threat –** Wash up, freshen up, or seal it up without carrying three gadgets. |
| **Precision Targeting –** Keyed lanyard ensures directional alignment with bidet outlet. | **Point and shoot –** Arrow tells you where the splash lands so you don't hose your boots. |
| **Universal Interface –** Fits most PET threaded bottles (SmartWater, etc.). | **Bottle friendly –** Screws onto just about any trail bottle, from SmartWater to gas station specials. |
| **Compact Portability –** 1.15 oz weight, pocket-stash dimensions. | **Trail feather –** Lighter than the TP you'll leave behind. |
| **Mission-Grade Durability –** ASA/TPU polymer blend resists UV, impacts, and field abuse. | **Built tough –** Won't crack, warp, or backfire when chili night hits. |
| **Belt-Clip Integration –** Quick-attach RRG ecosystem compatibility. | **Hands-free carry –** Clips on easy, so your "backup plan" never wanders off. |
| **Secure Containment –** O-ring seal prevents leaks under pack pressure. | **No drips –** Keeps the water in the bottle, not in your sleeping bag. |

## About Ridge Runner Gear

At Ridge Runner Gear, we believe you shouldn't have to choose between comfort and capability. Our gear is meticulously engineered for those who seek the serenity of the wilderness without sacrificing the sophistication of well-designed essentials. Whether you're setting up a base camp beneath alpine stars or trekking toward your next breathtaking vista, our products deliver premium performance with minimalist weight. Because luxury isn't about excess—it's about excellence, wherever the trail leads.

We are a faith-based company, guided by Christian values in everything we do—from the way we design our gear to how we serve our customers. We believe the outdoors is one of God's greatest gifts, and we're passionate about helping others enjoy it responsibly and respectfully. That's why we practice Leave No Trace principles and strive to be good stewards of the wild places we love.

Proudly American Made, our gear is built with rugged durability and refined utility for the serious adventurer.

Thank you for supporting our dream and being part of the Ridge Runner journey. With your support, we get to build gear we love—for adventures you'll never forget.

## Dimensions

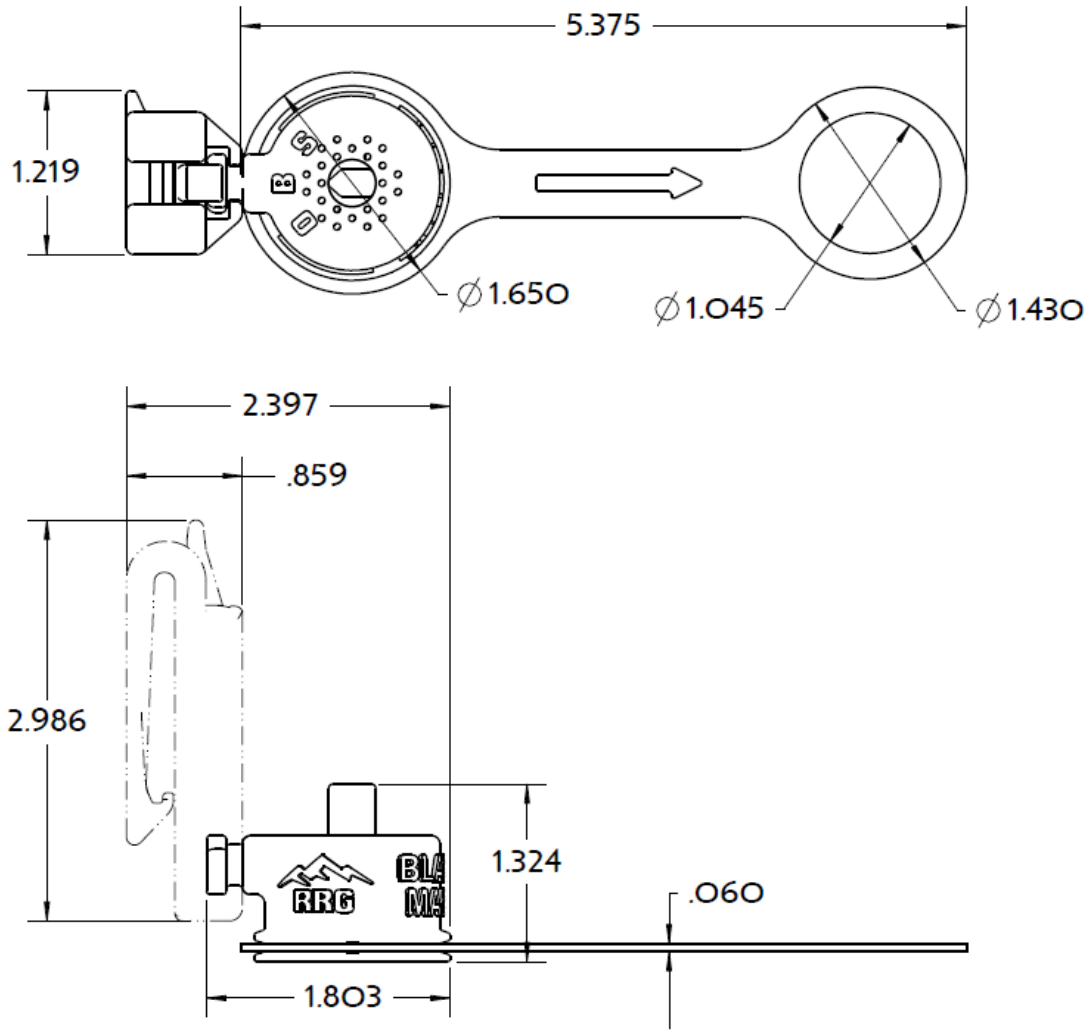
5.375
1.219
∅1.650
∅1.045
∅1.430
2.397
.859
2.986
1.324
.060
1.803
RRG
BLA
M4

## Identification

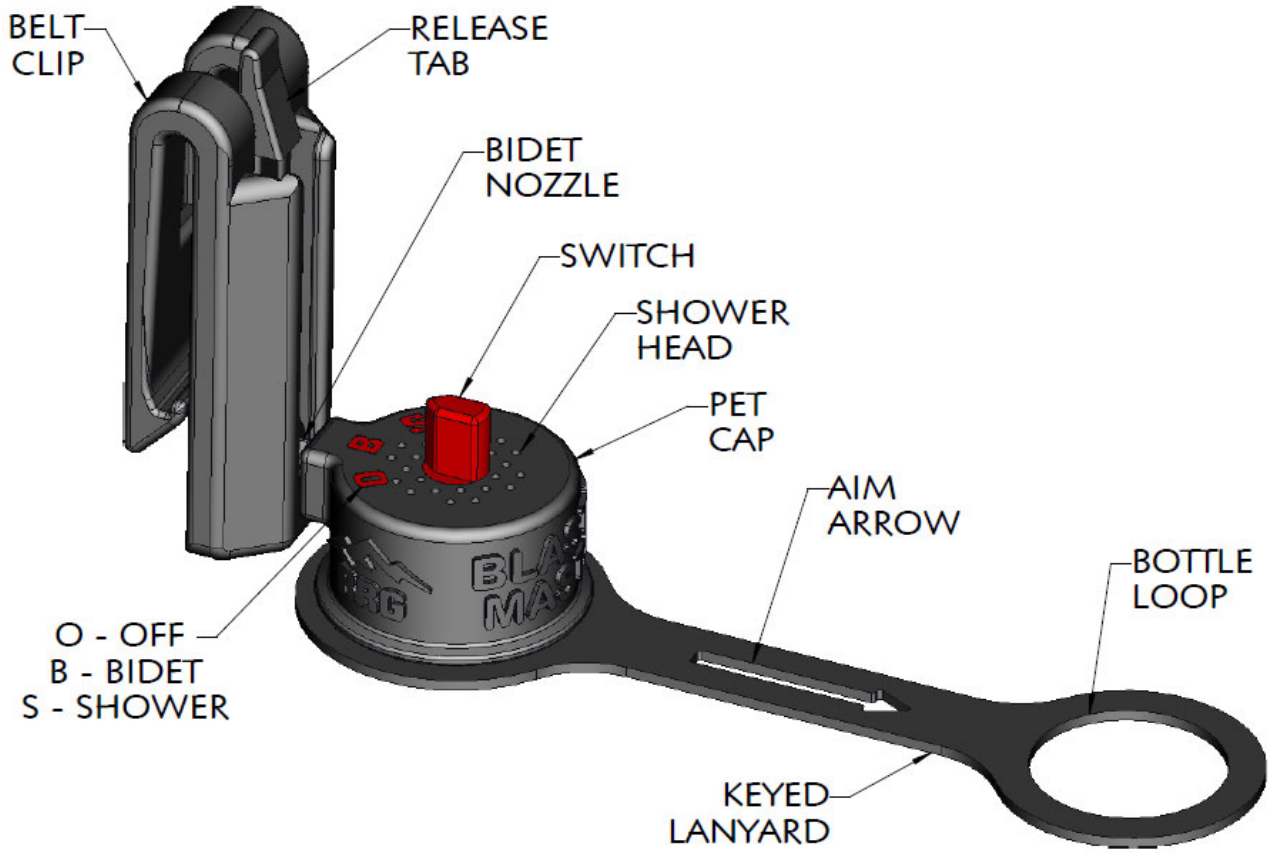

# Operation Instructions — Blaster Master

- **Loop It.** Slide the lanyard bottle loop over your bottle top like it owes you money. Arrow points the way — trust it, or risk watering your boots.

- **Switch It Off.** Make sure the switch is set to **O** for “Off” (that’s **O** for “Oh good, no surprise shower,” not zero).

- **Screw It (But Not Like That).** Twist the Blaster Master onto your bottle until snug. Don’t crank it down like you’re wrestling a pickle jar — the O-ring’s already doing the heavy lifting.

- **Squeeze Test.** Give the bottle a gentle squeeze. If water sprays everywhere, congrats — you just found the leak before your pack did. If not, you’re locked, loaded, and fresh-bound.

## How to Switch Modes Without Soaking Yourself

- **Loosen Up.** Give the cap a few turns to loosen it. (Not too much — unless you like surprise hydration.)

- **Pick Your Adventure.** Twist the red switch on top to the right letter:
  - **O = Off** (for travel mode and dignity).
  - **B = Bidet** (for when nature calls and leaves just won't cut it).
  - **S = Shower** (for rinsing hands, pots, or last night's chili regrets).

- **Lock It Down.** Tighten the cap — righty tighty, lefty leaky. If you're spraying before you squeeze, you missed this part.

## How to Operate Bidet Mode (a.k.a. Backcountry Freshness Protocol)

- **Line It Up.** Make sure the keyed lanyard is seated in the cap grooves and the arrow is pointing straight at the bidet nozzle. (The arrow is your friend. Ignore it, and your boots will tell the story.)

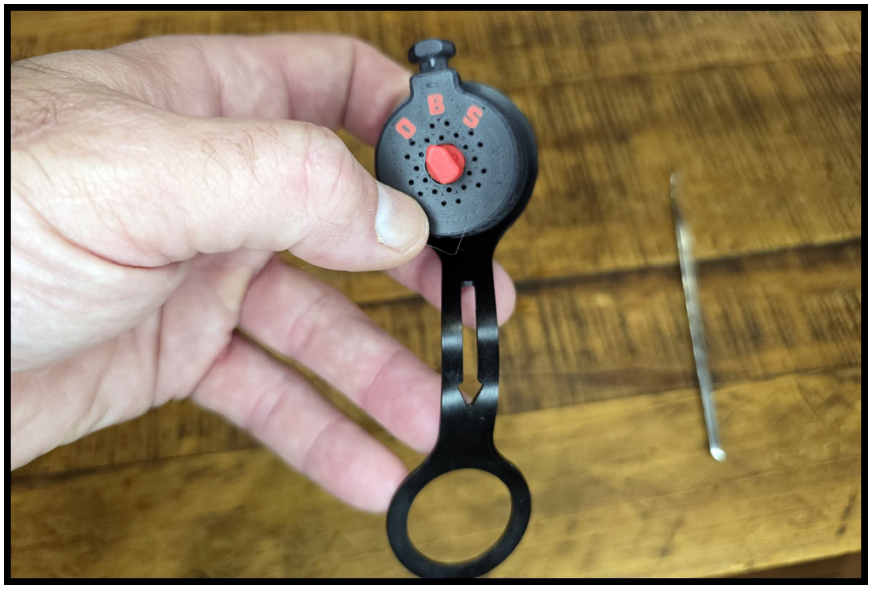


- **Select Your Weapon.** Turn the red switch to **B = Bidet.** That's B for "Better aim than leaves."

- **Assume the Position.** Drop trousers and pop a squat. Bonus points for balance and discretion.
- **Flip & Grip.** Turn the bottle upside down — don't panic, the nozzle won't leak unless you squeeze.
- **Take the Shot.** Aim the arrow at the bullseye and squeeze with enough force to get the job done. (Remember, it's a rinse, not a fire hose.)

## How to Operate Shower Mode (a.k.a. The Trail Rinse Revival)

- **Loosen the Cap.** Give the cap a few turns — just enough to let the pressure breathe.

- **Choose Wisely.** Turn the red switch to **S = Shower.** (That's "S" for "Sudsy rinse," not "Surprise spray.")

- **Tighten It Up.** Snug the cap back down — righty tighty, lefty drippy.
- **Flip and Squeeze.** Turn the bottle upside down and give it a firm squeeze. Voilà — you're now the cleanest thing on the trail since rain.

  **Pro Tip:** Great for washing hands, faces, pots, or regrets — just not all in that order.

## How to Use the Belt Clip with the Blaster Master

- **Clip it in:** Stick the nozzle into the clip and slide it down until it clicks — that's your "locked and loaded."

- **Take it out:** Slide it up, press the little tab, and pop it out — quick, tidy, no drama.

# Disassembly for Maintenance — Blaster Master

**Tools needed:** small pick or dental pick, tweezers (optional), lint-free cloth, mild soap, potable-water-safe silicone grease (thin film), replacement O-ring (if worn).

**Safety first:** Small parts. Keep away from kids. Don’t taste the grease. If anything looks cracked or shredded, replace it — duct tape is for tents, not seals.

## Step-by-step Disassembly

- **Empty & dry.** Make sure the bottle is empty and the Blaster Master is set to **O = Off**. Work over a clean surface so tiny parts don’t wander off the ridge.
- **Pop the O-ring.** Use a pick or small flat tool to carefully pry the O-ring out of its groove. Work slowly to avoid nicking the rubber.

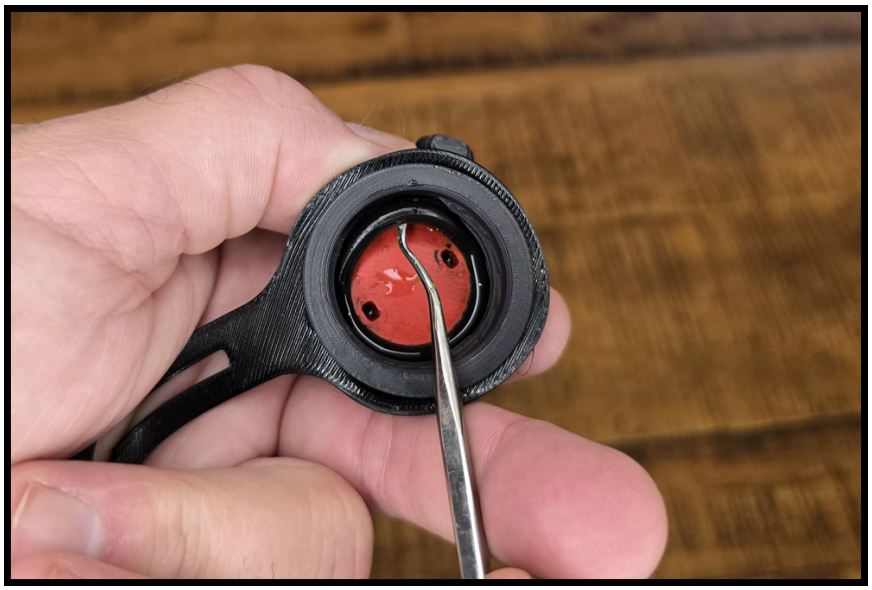

- **Depress the switch.** Push the red switch down toward the cap bottom (this relieves the retention catch).

- **Remove switch & gasket.** While holding the switch depressed, lift/remove the switch assembly and the small gasket beneath it. Tweezers help here if your fingers are clumsy or cold.

- **Inspect parts.** Check the O-ring, gasket, switch, and nozzle for cuts, flattening, grit, or deformation. Replace any damaged parts.
- **Clean components.** Rinse parts with warm water and mild soap; use a soft brush if needed. Rinse thoroughly with potable water and dry on a lint-free cloth.

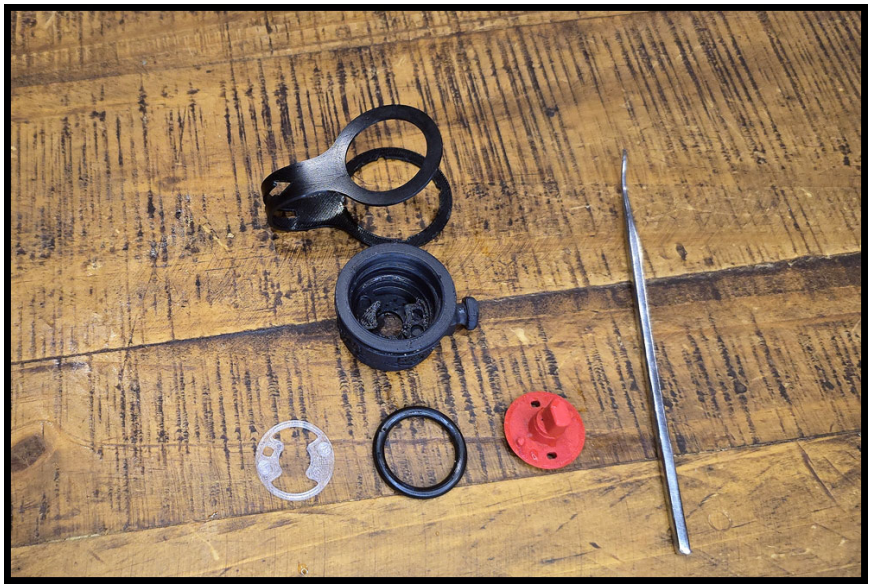

## Grease & Reassembly

- **Grease sparingly.** Apply a **very thin** film of potable-water-safe silicone grease to the top and bottom faces of the gasket and lightly to the O-ring seating surface. (Example product: a potable-water-safe silicone grease such as Haynes Sil-Lube 475 or equivalent — verify the product label if potable-water compatibility matters to you.)
- **Reinstall gasket & switch.** Seat the gasket back into place, pushing the gasket posts fully into their holes and lining up the tiny hole in the gasket with the tiny hole in the cap. Then press the switch assembly into position — it should slide in cleanly, move freely, and seat without binding.

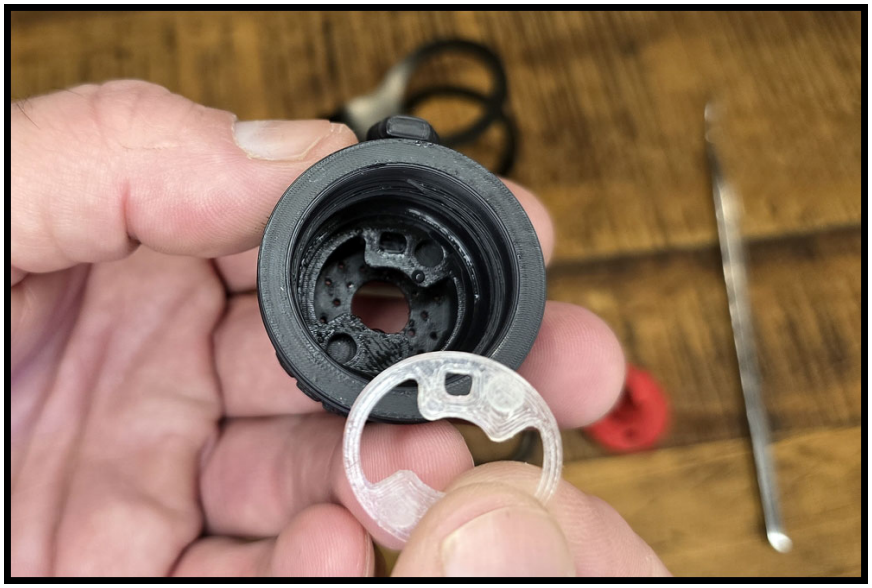

- **Reinsert O-ring.** Carefully press the O-ring back into its groove without twisting or stretching it excessively. Ensure it sits evenly.
- **Function check.** Screw the Blaster Master onto a test bottle (snug, not gorilla-tight), set to **O**, and perform a gentle squeeze test to confirm no leaks and correct switch operation.
- **Final torque note.** Tighten to snug — the O-ring does the sealing. Over-torquing risks damage.

## Additional Tips & Schedule

- **Replace O-ring:** At first sign of cracking, flat spots, or if it feels sticky—inspect before every multi-day trip.
- **Full tear down**: Do a full clean and grease every few months of steady trail use, or monthly if you're backpacking hard and rinsing after every creek, camp meal, and chili mishap.
- **Spare parts:** Carry one spare O-ring and one spare gasket in a tiny zip bag — they weigh less than your pride.
- **If it leaks after reassembly:** Disassemble, check for debris in the groove, re-seat the O-ring, and try again.

## Blaster Master Tips & Tricks

| Field Manual Spec | Civilian Translation |
|---|---|
| **Directional Indicator –** Utilize the molded lanyard arrow for accurate bidet targeting. | **Follow the arrow –** Unless you like washing your boots instead of your booty. |
| **Operational Check –** Conduct a test spray away from the body prior to engagement. | **Test before you blast –** Better to baptize the dirt than baptize your socks. |
| **Stowage Protocol –** Employ RRG belt clip interface for rapid deployment and secure carry. | **Clip it –** Because digging through your pack mid-crisis is how nicknames like "Puddle Pants" are born. |
| **Torque Limitation –** O-ring compression sufficient without excessive force. | **Don't crank it –** Tight enough to seal, loose enough not to break. |
| **Fluid Purity –** Recommended use with potable or filtered water. | **Fresh is best –** Creek water for feet, clean water for cheeks. |
| **Multi-Role Capability –** Applicable for hygiene, dish rinse, cooling, and hydration tasks. | **More than a bidet –** Wash hands, clean pots, cool down, or yes… hose the caboose. |
| **Environmental Advisory –** Do not store filled in freezing conditions; structural integrity may be compromised. | **Cold warning –** Frozen butt blasters are only funny until the cap cracks. |
| **Carry Option –** Lanyard length allows single-finger loop transport for short-distance movement or hands-free positioning. | **Finger loop ready –** The lanyard's just long enough to tote on a finger when you're juggling gear, maps, or trail snacks. |

# Care & Feeding of Your Blaster Master (Because Even Caps Deserve TLC)

- **Keep it clean:** Knock off dirt, sand, and trail burrito fallout after each trip. A clean Blaster Master sprays water, not yesterday's regrets.
- **Soap, not science experiments:** Rinse with mild soap and water. Harsh cleaners are for mad scientists, not your backside.
- **Dry it off:** Water + storage = Eau de Swamp. Dry it before packing unless you like surprises in your sleeping bag.
- **Don't roast it:** ASA/TPU is tough and UV-resistant, but it ain't cast iron. Don't bake it on a dashboard or park it by the fire unless you want "abstract art" instead of a cap.
- **Mind the O-ring:** That little rubber hero keeps leaks where they belong. Check it, clean it, and replace if it looks tired.
- **Respect the mission:** Built to wash, rinse, and seal. Not a squirt gun, not a flamethrower, and definitely not a "prank device."

## Need Parts? Want to Chat?

To purchase replacement parts contact us at:
www.rrgruntheridge.com

## Final Words of Wisdom

The Blaster Master isn't just a bottle cap, it's your dignity's best friend on the trail. Follow the arrow unless you want a nickname like "Soggy Bottom Bob," and test it before nature calls in ALL CAPS, because trust us, practice sprays are a whole lot funnier than panic sprays. Dry it after use, and respect the O-ring—it's the little hero keeping you fresh. Laugh at the mishaps, brag about the saves, and remember: a clean start makes for a stronger finish, no matter where the ridge takes you.

DRAWING #
700153-01

| ITEM | QTY | PART # | DESCRIPTION |
|---|---|---|---|
| 1 | 1 | 700151-01 | CAP, BLASTER MASTER |
| 2 | 1 | 700152-01 | VALVE, BLASTER MASTER |
| 3 | 1 | 700154-01 | GASKET, BLASTER MASTER |
| 4 | 1 | 700155-01 | LANYARD, BLASTER MASTER |
| 5 | 1 | 700199-01 | CLIP, BELT |
| 6 | 1 | 9452K29 | O-RING, BUNA 3/4 ID X 1/8 WD |

| REV NO | DATE | DESCRIPTION | ECN NO | BY |
|---|---|---|---|---|

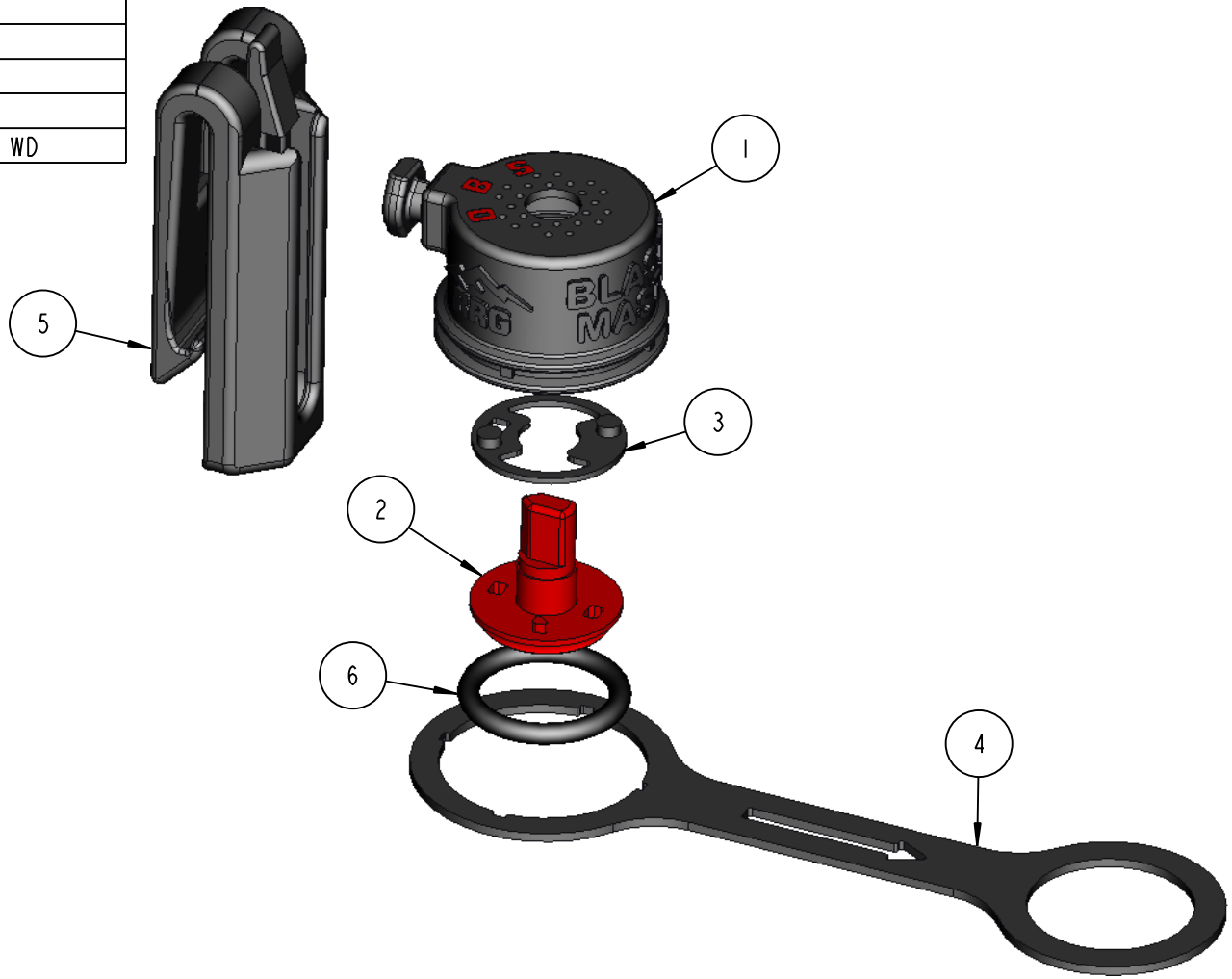


| WEIGHT IN OZ. |
|---|
| 1.15 |

| | | | | | |
|---|---|---|---|---|---|
| DRAWN BY: A KEY | SCALE 0.875 | DIMENSIONAL TOLERANCES UNLESS OTHERWISE NOTED<br>.XX .01 / .XXX .005 / ANG. .5 | MATERIAL: N/A | THIRD ANGLE PROJECTION | PROPRIETARY AND CONFIDENTIAL NO PORTION OF THIS DRAWING MAY BE QUOTED OR REPRODUCED IN ANY FORM WITHOUT THE EXPRESS WRITTEN PERMISSION OF RIDGE RUNNER GEAR, LLC. CANTON, GA 30114 USA |
| CHECKED BY: | DATE Oct-03-25 | REMOVE ALL BURRS AND SHARP EDGES UNLESS OTHERWISE NOTED | HEAT TREAT: N/A | MODEL: BLASTER | TITLE: ASSY, BLASTER MASTER |
| TRACED BY: | MASTER | ALL DIMENSIONS ARE FINISHED DIMENSIONS<br>DO NOT SCALE - WORK TO DIMENSIONS ONLY | FINISH: N/A | SHEET NO.: 1 OF 5 | DRAWING # 700153-01 |

RIDGE RUNNER

# Optional Gear for Overachievers

## Yak Rack: Your Kayak's New MVP

The Yak Rack turns your kayak into a fully loaded fishing machine! It mounts your Rocket Reel and Tackle Toter tackle box right into standard T-slots—no drilling, no fuss. With the same trusty trigger mechanism as the Reel Rack, plus a quick-lock sliding arm to secure your tackle box, everything stays put even when the action heats up. The articulated mount adjusts to your setup and pops off quickly when it's time to pack up. Paddle, cast, conquer—yak-style.

## Reel Rack: Hands-Free Fishing, Anywhere

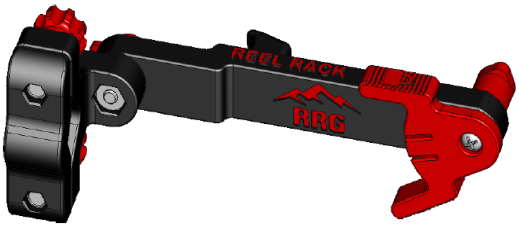


Turn any camp chair or pole into your personal fishing throne with the Reel Rack! This ultralight mount securely holds your Rocket Reel in place while you kick back and relax. The positive trigger mechanism gives you lightning-fast release when it's time to fight that fish. Super lightweight, rock-solid, and ridiculously convenient—because your hands deserve a break too.

## Rocket Reel:Your Cast-Anywhere Ticket to Dinner

Why pack two handles when one will do it all? Clip in the Rocket Reel kit and watch your Timber Tickler handle transform from a branch-busting saw grip into a fish-wrangling reel holder. One minute you're clearing campfire wood, the next you're pulling dinner out of the creek like a backwoods magician. It still fits the Ridge Runner belt clip system, so you can swap from "Paul Bunyan mode" to "Old Man and the Sea" in seconds flat — no toolbox, no hassle, just pure outdoorsy showmanship.

## Tackle Toter: Your Belt-Mounted Bait Boss

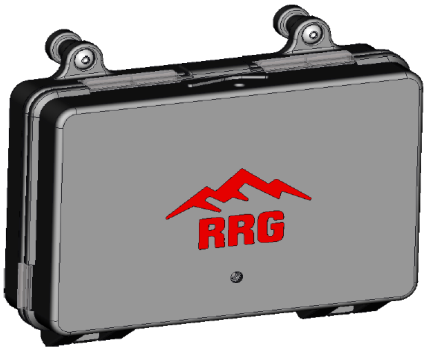


Meet the Tackle Toter—the tactical-grade tackle box that does it all. Your Rocket Reel snaps apart and mounts right to the front, making you ready to cast at a moment's notice. It clips onto quick-release belt mounts, fits standard MOLLE webbing like a glove, and connects seamlessly to the Yak Rack or Tack Rack for kayak or camp chair fishing. Use it while strapped to your belt like a true backcountry commando. Available in five models with up to 12 individually covered compartments—because organized chaos is still chaos.

## Timber Tickler: One Handle, Endless Possibilities

Meet the Timber Tickler—the ultralight backpacking saw that moonlights as your Rocket Reel handle. Designed for serious weight savers, it breaks down to blade-length size for compact carry. With five scabbard-style sheath options (6", 9", and 12" blades available), it attaches to the same quick-release belt clip as your other RRG gear. The handle snaps to the sheath and locks tight with a clever wedge system—no wiggle, all wow. One handle + multiple blade sheaths = one smart, versatile saw that saves pack space *and* cash.

**Don't just hike it — run the ridge at**
**www.rrgruntheridge.com**

# Legal Notices & Policies

## Copyright & Use Disclaimer

All content, images, instructions, and designs in this manual are the property of Ridge Runner Gear. Unauthorized reproduction, distribution, or commercial use of any part of this manual or product design is not permitted without written permission.
© 2025 Ridge Runner Gear. All rights reserved.

## Liability Disclaimer

Ridge Runner Gear assumes no responsibility for any injury, damage, or loss resulting from the use or misuse of the Blaster Master. Users are responsible for reading and following all instructions provided in this manual. Outdoor hygiene and campsite activities carry inherent risks, including but not limited to slippery rocks, mis-aimed sprays, startled wildlife, and the occasional soggy sock. The Blaster Master keeps you fresh — not foolproof. Always exercise caution, aim responsibly, and remember: it won't explain to your trail mates why you turned the wildflowers behind camp into a splash zone. Use the Blaster Master at your own risk.

## Limited Warranty

Ridge Runner Gear warrants the Blaster Master to be free from defects in materials and workmanship under normal use for a period of 90 days from the date of purchase. This warranty applies only to the original purchaser and does not cover damage caused by misuse, abuse, modifications, improper maintenance, or normal wear and tear.
If a defect arises during the warranty period, Ridge Runner Gear will, at its discretion, repair or replace the defective part with proof of purchase. To submit a warranty claim, contact us at: www.rrgruntheridge.com

## Return Policy

If you're not completely satisfied with your Blaster Master, you may return it within 30 days of purchase for a full refund or exchange. All returns must include an RMA (Return Merchandise Authorization) number. Items must be returned in unused condition with original packaging. Return shipping is the responsibility of the customer unless the product arrived damaged or defective. To initiate a return or exchange, contact us at: www.rrgruntheridge.com

## A Word on 3D Printing

Our gear is proudly 3D printed, which means you may spot layer lines, tiny gaps, or slight weight differences. These are natural traits of the process and do not affect strength or performance. Color tones may also vary from batch to batch. While Ridge Runner Gear is a function over form company, we still care about aesthetics and hold every product to the highest standards possible. In short: it may not look like it came from a spaceship factory, but it'll perform like it belongs on your next adventure.