Yak Rack

by Ridge Runner Gear, LLC

RUN THE RIDGE

(and don't forget your Rocket Reel & Tackle Toter)

Operator's Guide: Because even your gear deserves to piggyback on a Yak.

Product Name: Yak Rack Brand: Ridge Runner Gear (RRG)

Model Number: YR1
Weight: 4.5 oz (As heavy as two lures, three excuses, and one tangled line.)
Dimensions: 8.1" L x 3.6" W x 5.5" H (Smaller than the one that "got away.")
Materials: ASA, stainless steel (Made to outlast your patience when the fish ain't biting.)
Mounts: Locks the Rocket Reel and Tackle Toter front and center on your kayak T-slot, ready for action.

What Is This Magical Contraption?

Meet the Yak Rack — the mother ship mount with more grit than a sandbar in your shorts. Strap it to your kayak and suddenly you've got a floating command center that carries your Rocket Reel and Tackle Toter like loyal deckhands. No more juggling rods, tackle, and paddle like a three-armed circus act. Clip, snap, and stow — now your gear rides shotgun while you paddle like a river boss. It's sturdy, it's light, and it makes you look like you've got a pro guide's setup (even if you're still paddlin' in circles).

NOTICE: Reading this manual is faster than paddling after gear that just went overboard, cheaper than replacing lures that sank to the bottom, and way less humiliating than explainin' to the ranger how your "foolproof setup" floated away. Consider it a little river wisdom before you ride high with your Yak Rack.

Why the Yak Rack is the Smarter Than Your Average Rod Holder

Field Manual Spec	Civilian Translation
Operational Versatility – Mounts directly to standard kayak T-slot rails for a fast, secure fit.	**Yak-ready –** Click it on your rail quicker than you can say “river’s rising.”
Dual Rapid Release – Two lock-in mechanisms secure your Rocket Reel and Tackle Toter, then pop free instantly when it’s go-time.	**Gear on demand –** Snaps tight, releases faster than cousin Jimmy spotting a free doughnut.
Integrated Load-out – Carries both the Rocket Reel and Tackle Toter front and center for paddle-friendly fishing.	**All-in-one –** Your gear rides shotgun so you can paddle without playing twister in your kayak.
Mission-Grade Durability – Built from ASA and stainless steel to shrug off sun, spray, and clumsy landings.	**River tough –** Weatherproof, whoops-proof, and ready for all-day abuse.
Compact Portability – Small footprint with maximum function.	**Travel light –** Packs less than a trail snack, works harder than a camp mule.
Low-Mass Advantage – Barely tips the scale, so your kayak hauls fish, not dead weight.	**Feather-light –** Lighter than the sandwich you forgot in your cooler. .

About Ridge Runner Gear

At Ridge Runner Gear, we believe you shouldn’t have to choose between comfort and capability. Our gear is meticulously engineered for those who seek the serenity of the wilderness without sacrificing the sophistication of well-designed essentials. Whether you’re setting up a base camp beneath alpine stars or trekking toward your next breathtaking vista, our products deliver premium performance with minimalist weight. Because luxury isn’t about excess—it’s about excellence, wherever the trail leads.

We are a faith-based company, guided by Christian values in everything we do—from the way we design our gear to how we serve our customers. We believe the outdoors is one of God’s greatest gifts, and we’re passionate about helping others enjoy it responsibly and respectfully. That’s why we practice Leave No Trace principles and strive to be good stewards of the wild places we love.

Proudly American Made, our gear is built with rugged durability and refined utility for the serious adventurer.

Thank you for supporting our dream and being part of the Ridge Runner journey. With your support, we get to build gear we love—for adventures you'll never forget.

Dimensions

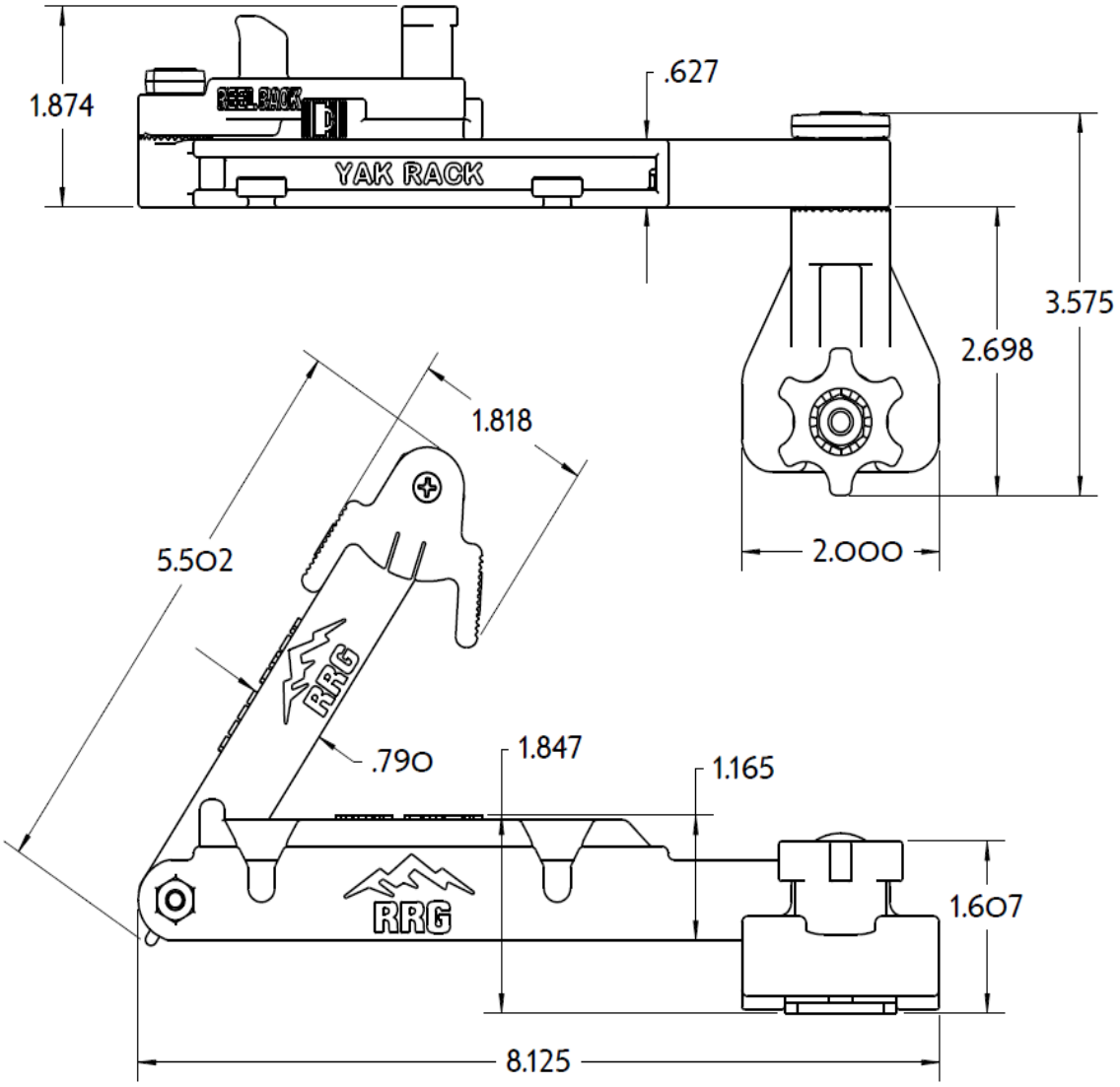
1.874
.627
YAK RACK
3.575
2.698
2.000
1.818
5.502
.790
1.847
1.165
1.607
8.125

Identification

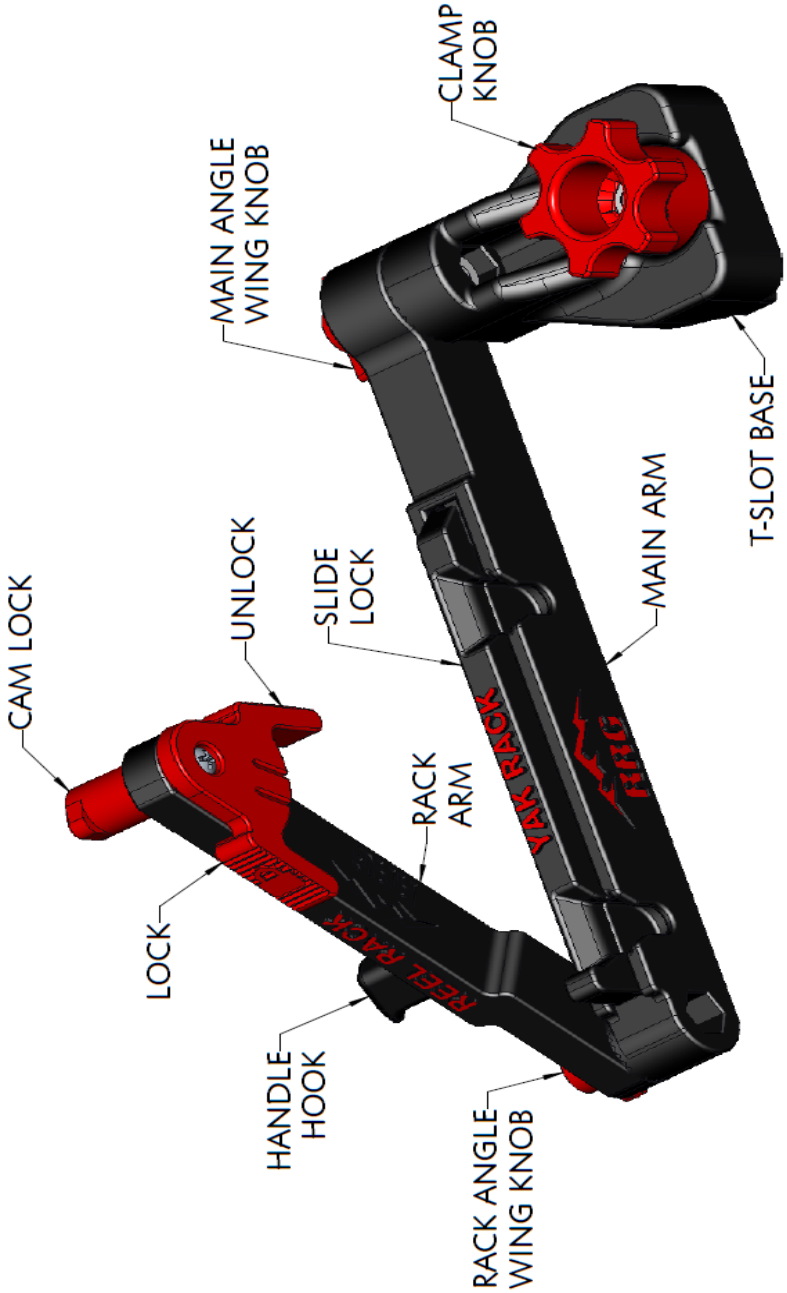

Assembly & Operation Instructions

Yak Rack Assembly Instructions

- **Line ’er up** – Loosen the clamp knob and slide the T-slot plate into your kayak’s T-slot. (Think of it like threading a cat through a doorway — smoother if you don’t fight it.)

- **Lock it down** – Tighten the clamp knob until it’s snug. (No need for gorilla strength — it ain’t grandma’s pickle jar.)

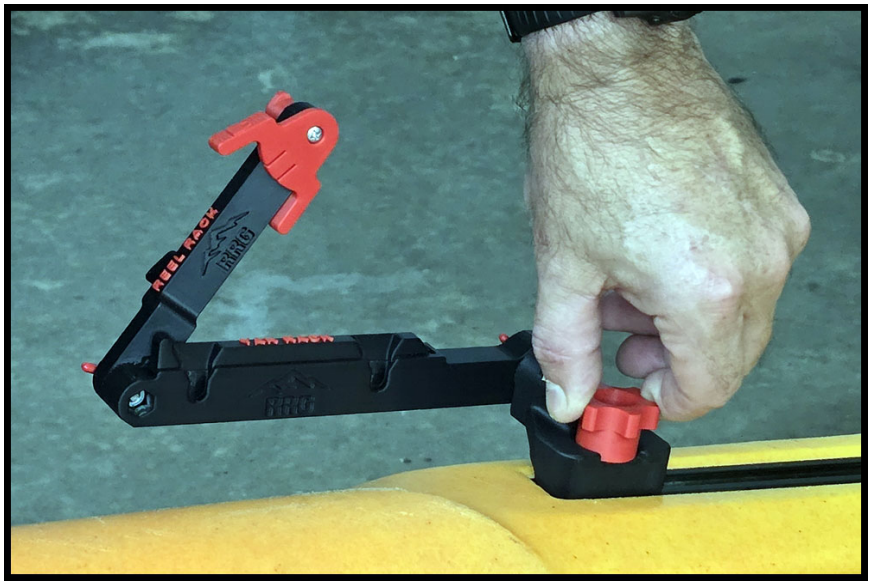

- **Straighten your act** – Swing the main arm so it runs nice and parallel with your kayak's rail. (If it looks like a drunk fence post, you're not there yet.)

- **Set your angle** – Loosen the wing knob, tilt the rack arm where you want it, and cinch it back down. (Easy as flipping a flapjack — without the syrupy mess.)

Yak Rack Operation Instructions

- **Load the Toter** – Slide the Tackle Toter mount post into the main arm slots, post facing down. (Like plugging in the toaster — but with less smoke.)

- **Lock it up** – Yank the slide lock toward you to lock the Toter in place. (More satisfying than slamming a screen door.)

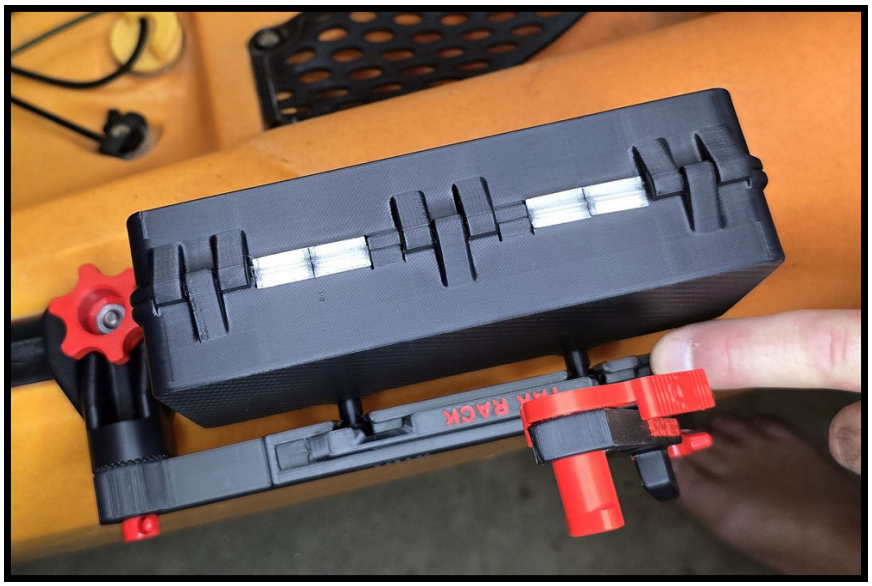

- **Cam check** – Make sure the cam lock is in the *unlock* position. (If it ain't, you'll be wrestling plastic instead of fish.)

- **Hook the Rocket** – Swing the Rocket Reel handle onto the handle hook and drop it into the lowest handle slot. (Like hanging your hat — only this one catches dinner.)

- **Clamp it down** – Slide the cam lock into the handle opening and press it down tight. (Holds firmer than a tick on a coon hound.)

Double Duty, Double Savings

Why buy more when you can run smarter? The **Yak Rack Kit** is designed to team up with your existing **Reel Rack arm**, giving you the full **Yak Rack setup** without the extra bulk. By combining the two, you shave ounces off your load-out and dollars off your gear bill — lighter on your kayak, lighter on your wallet. It's the Ridge Runner way: one tough system, less weight to haul, more cash left for "just one more lure."

Yak Rack – Rocket Reel and Tackle Toter Locked and Loaded

Yak Rack Tips & Tricks

- **Dial It In** – Adjust the arm so your reel sits where your hands naturally land. (If you look like you're casting yoga poses instead of lures, move it.)
- **Tight Enough –** Twist the knobs until it's snug and steady. (This ain't a pickle jar contest at grandma's — no need to show off.)
- **Release Practice –** Pop those quick releases a few times before the fish are biting. (Smoother than snagging the last donut at the office.)
- **Cam Check –** Always double-check the lock before paddling out. (Cheaper than explaining how your reel is now "fish habitat.")
- **Hands-Free Perks –** With your gear locked in, you've got freedom for snacks, strumming, or supervising rookie knot-tyers.

Care & Feeding of Your Yak Rack (Because Even Racks Need Lovin’)

- **Keep it tidy:** Shake off river grit, fish slime, and trail mix shrapnel after each trip. A clean Yak Rack carries reels and tackle boxes, not regrets.
- **Mild, not wild:** Wash it with gentle soap and water. Leave the caustic brews for high school chemistry class, not your fishing gear.
- **Dry it right:** Stash it wet and you’ll invent “Swamp Funk,” the cologne nobody asked for.
- **Test the clamps:** Give knobs, locks, and releases a wiggle now and then. A two-second check beats a Rocket Reel doing the backstroke.
- **Don’t bake it:** ASA’s tough and heat resistant (**max's out at 100°C or 212°F)**, but it ain’t a Dutch oven. Don’t park it in a roasting-hot truck or next to the fire unless you want abstract art.
- **Grease lightning:** Hit the moving parts with a quick shot of silicone spray (**WD-40 Specialist is your MVP**). Keeps things slicker than a greased-up catfish at the county fair.

Need Parts? Want to Chat?

To purchase replacement parts contact us at:
www.rrgruntheridge.com

Final Words of Wisdom

The Yak Rack ain’t magic, but it’s close. It keeps your Rocket Reel and Tackle Toter right where you need ‘em so you can paddle like a pro instead of juggling rods like a circus act. Remember, the river doesn’t hand out do-overs: secure your gear, clip in tight, and double-check those releases before the fish of the day comes knockin’. Treat the Yak Rack like a good fishing buddy — steady, reliable, and not afraid to call you out when you’re about to do something dumb. Paddle smart, fish hard, and may your biggest catch be heavier than your best excuse. And don't forget to laugh, have fun and **Run the Ridge**.

DRAWING # 700382-01

ITEM	QTY	PART #	DESCRIPTION
1	1	700388-01	ASSY, REEL RACK ARM
2	1	700428-01	KIT, YAK RAK ARM/BASE

REV NO	DATE	DESCRIPTION	ECN NO	BY

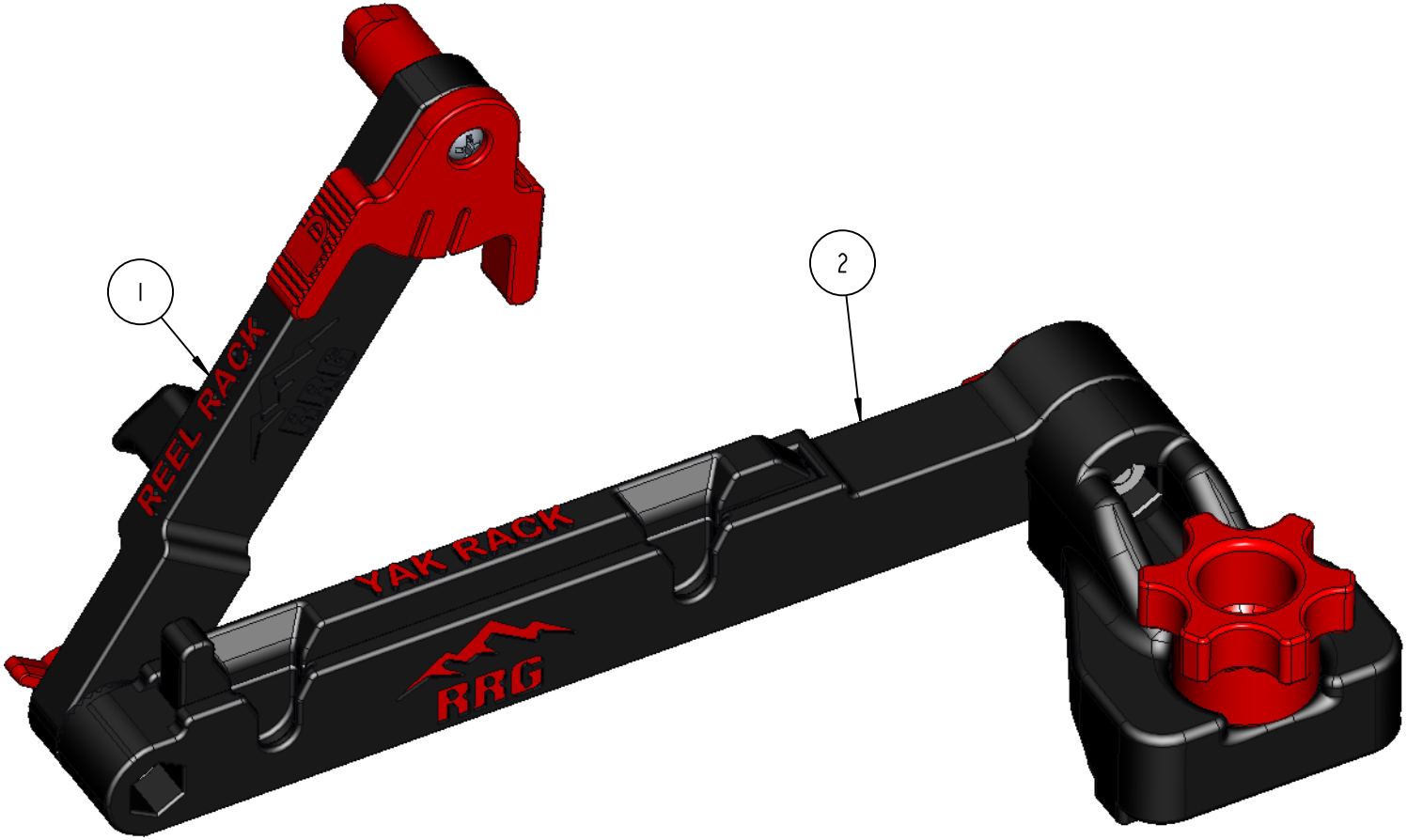

WEIGHT IN OZ.
4.48

DRAWN BY: A KEY	SCALE 0.875	DIMENSIONAL TOLERANCES UNLESS OTHERWISE NOTED .XX .01 / .XXX .005 / ANG. .5	MATERIAL: N/A	THIRD ANGLE PROJECTION	PROPRIETARY AND CONFIDENTIAL NO PORTION OF THIS DRAWING MAY BE QUOTED OR REPRODUCED IN ANY FORM WITHOUT THE EXPRESS WRITTEN PERMISSION OF RIDGE RUNNER GEAR, LLC. CANTON, GA 30114 USA
CHECKED BY:	DATE Sep-24-25	REMOVE ALL BURRS AND SHARP EDGES UNLESS OTHERWISE NOTED	HEAT TREAT: N/A	MODEL: YAKRACK	TITLE: ASSY, YAK RACK
TRACED BY:	MASTER	ALL DIMENSIONS ARE FINISHED DIMENSIONS DO NOT SCALE - WORK TO DIMENSIONS ONLY	FINISH: N/A	SHEET NO.: 1 OF 5	DRAWING # 700382-01

RIDGE RUNNER

DRAWING #
700382-01

ITEM	QTY	PART #	DESCRIPTION
1	1	700388-01	ASSY, REEL RACK ARM
2	1	700428-01	KIT, YAK RAK ARM/BASE

REV NO	DATE	DESCRIPTION	ECN NO	BY

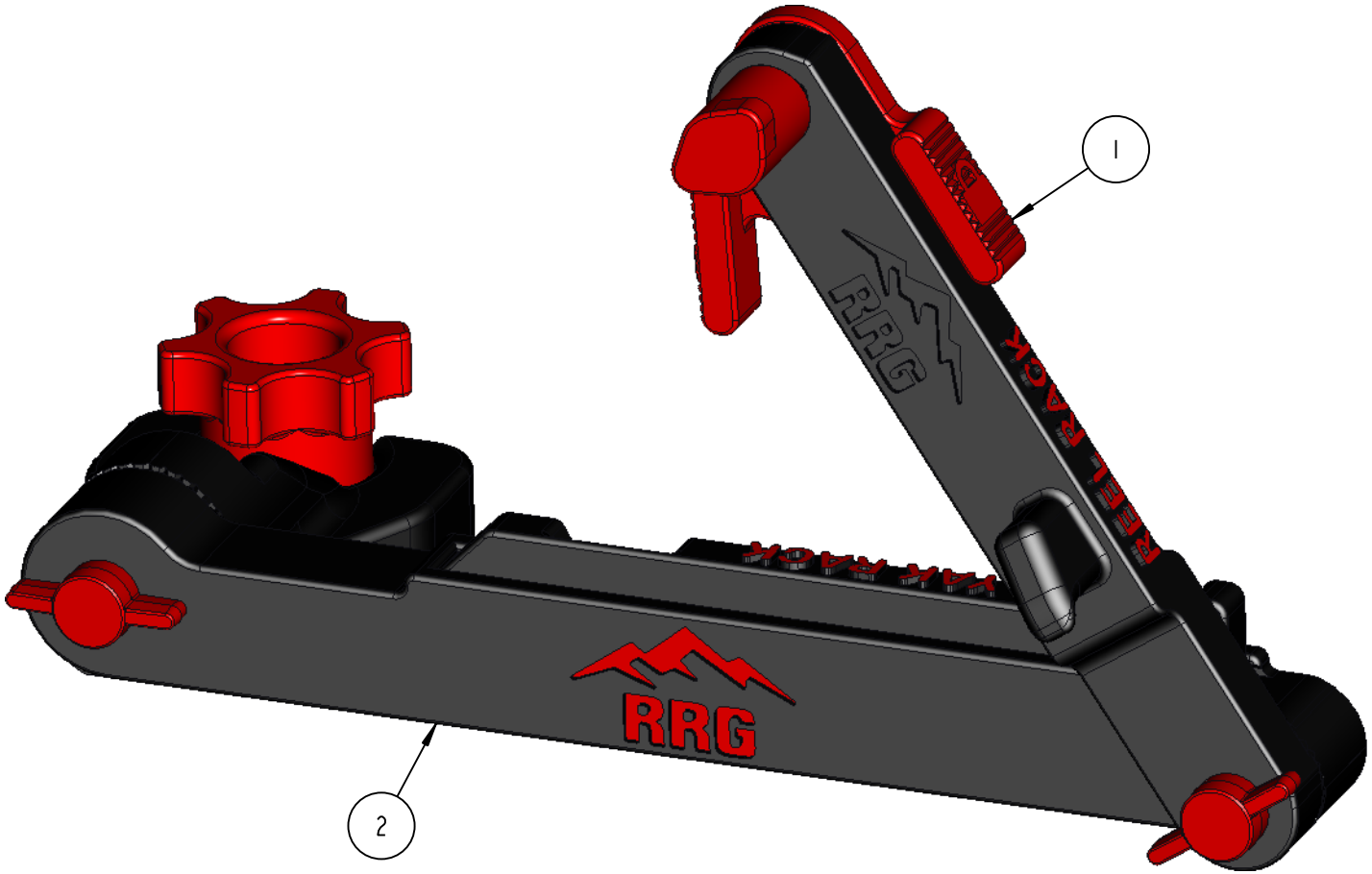

WEIGHT IN OZ.
4.48

DRAWN BY: A KEY	SCALE 1.000	DIMENSIONAL TOLERANCES UNLESS OTHERWISE NOTED (.XX .01, .XXX .005, ANG. .5)	MATERIAL: N/A	THIRD ANGLE PROJECTION	PROPRIETARY AND CONFIDENTIAL NO PORTION OF THIS DRAWING MAY BE QUOTED OR REPRODUCED IN ANY FORM WITHOUT THE EXPRESS WRITTEN PERMISSION OF RIDGE RUNNER GEAR, LLC. CANTON, GA 30114 USA
CHECKED BY:	DATE Sep-24-25	REMOVE ALL BURRS AND SHARP EDGES UNLESS OTHERWISE NOTED	HEAT TREAT: N/A	MODEL: YAKRACK	TITLE: ASSY, YAK RACK
TRACED BY:	MASTER	ALL DIMENSIONS ARE FINISHED DIMENSIONS DO NOT SCALE - WORK TO DIMENSIONS ONLY	FINISH: N/A	SHEET NO.: 2OF5	DRAWING # 700382-01

RIDGE RUNNER

DRAWING # 700428-01

ITEM	QTY	PART #	DESCRIPTION
1	1	700236-01	ASSY, KNOB WING 10-32X1.00 SS
2	1	700389-01	ASSY, YAK MOUNT BASE
3	1	700390-01	ASSY, YAK RACK ARM

REV NO	DATE	DESCRIPTION	ECN NO	BY

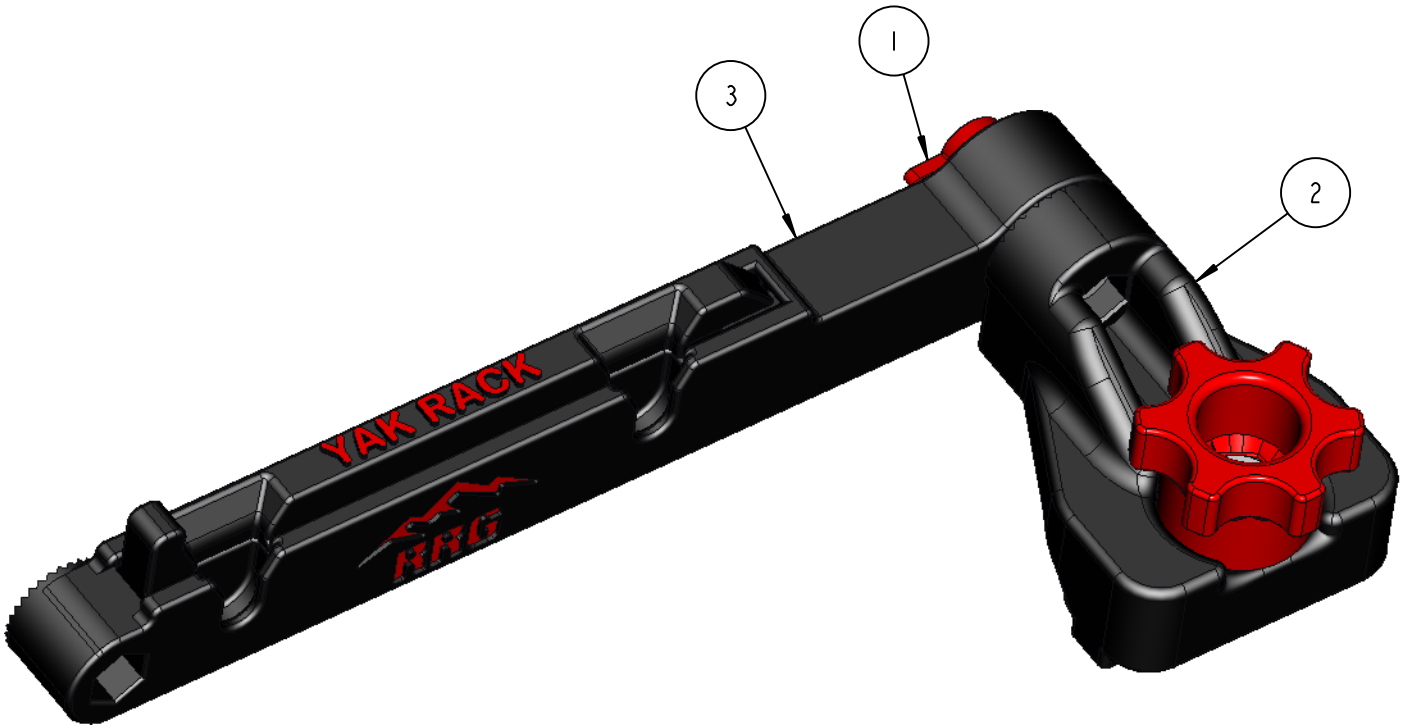

WEIGHT IN OZ.
N/A

DRAWN BY: A KEY	SCALE 0.875	DIMENSIONAL TOLERANCES UNLESS OTHERWISE NOTED .XX .01 / .XXX .005 / ANG. .5	MATERIAL: N/A	THIRD ANGLE PROJECTION	PROPRIETARY AND CONFIDENTIAL NO PORTION OF THIS DRAWING MAY BE QUOTED OR REPRODUCED IN ANY FORM WITHOUT THE EXPRESS WRITTEN PERMISSION OF RIDGE RUNNER GEAR, LLC. CANTON, GA 30114 USA
CHECKED BY:	DATE Sep-20-25	REMOVE ALL BURRS AND SHARP EDGES UNLESS OTHERWISE NOTED	HEAT TREAT: N/A	MODEL: YAKRACK	TITLE: KIT, YAK RAK ARM/BASE
TRACED BY:	MASTER	ALL DIMENSIONS ARE FINISHED DIMENSIONS DO NOT SCALE - WORK TO DIMENSIONS ONLY	FINISH: N/A	SHEET NO.: 1OF7	DRAWING # 700428-01

RIDGE RUNNER

DRAWING #
700388-01

ITEM	QTY	PART #	DESCRIPTION
1	1	700235-01	ASSY, KNOB WING 10-32X.75
2	1	700372-01	BRACKET, ROCKET REEL MOUNT
3	1	700376-01	ASSY, REEL RACKER LOCK

REV NO	DATE	DESCRIPTION	ECN NO	BY

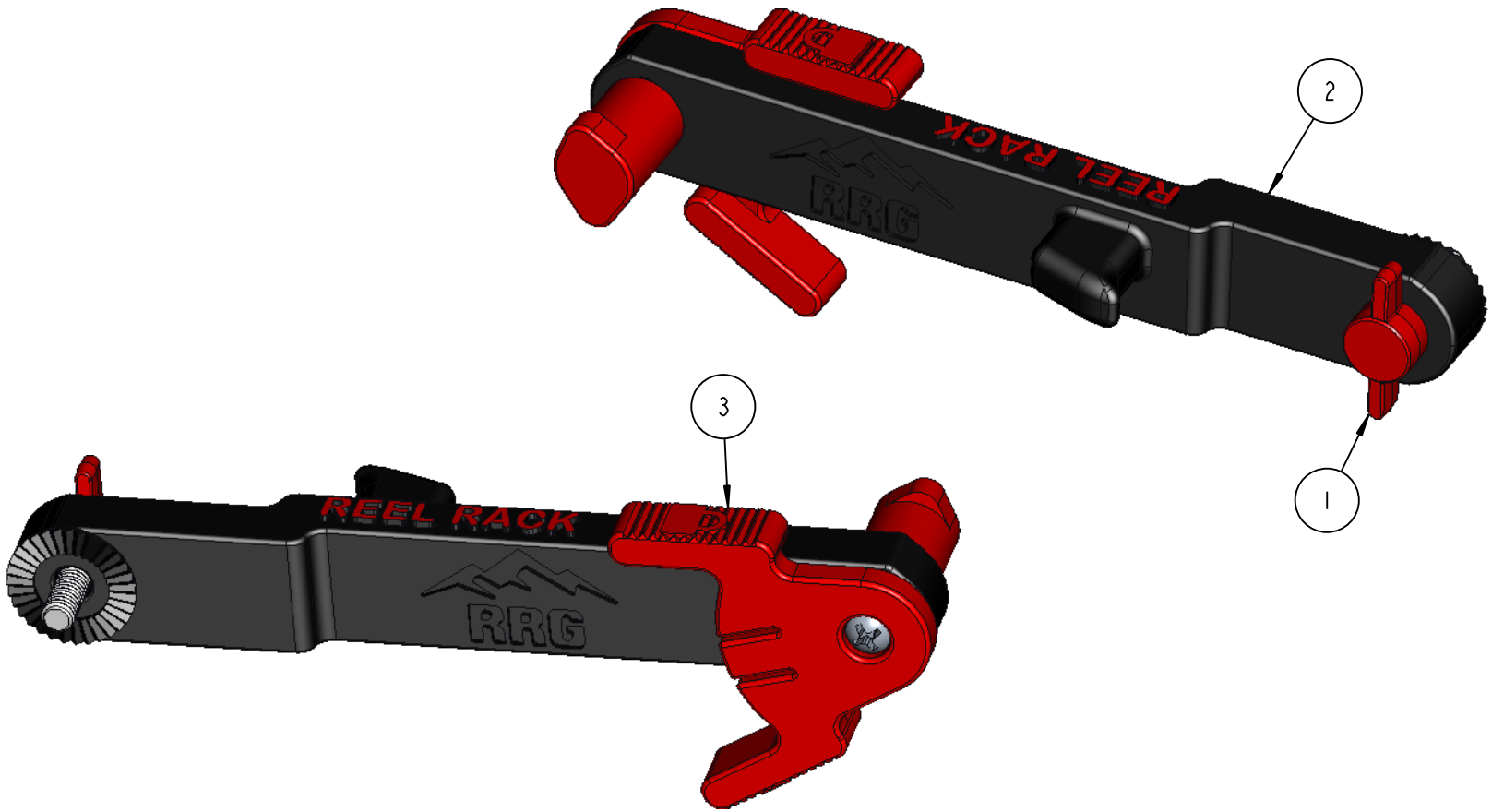

WEIGHT IN OZ.
.85

DRAWN BY: A KEY	SCALE 1.000	DIMENSIONAL TOLERANCES UNLESS OTHERWISE NOTED .XX .01 / .XXX .005 / ANG. .5	MATERIAL: N/A	THIRD ANGLE PROJECTION	PROPRIETARY AND CONFIDENTIAL NO PORTION OF THIS DRAWING MAY BE QUOTED OR REPRODUCED IN ANY FORM WITHOUT THE EXPRESS WRITTEN PERMISSION OF RIDGE RUNNER GEAR, LLC. CANTON, GA 30114 USA
CHECKED BY:	DATE Sep-24-25	REMOVE ALL BURRS AND SHARP EDGES UNLESS OTHERWISE NOTED	HEAT TREAT: N/A	MODEL: REELRACK	TITLE: ASSY, REEL RACK ARM
TRACED BY:	MASTER	ALL DIMENSIONS ARE FINISHED DIMENSIONS DO NOT SCALE - WORK TO DIMENSIONS ONLY	FINISH: N/A	SHEET NO.: 1OF1	DRAWING # 700388-01

RIDGE RUNNER

DRAWING #
700389-01

ITEM	QTY	PART #	DESCRIPTION
1	1	700383-01	CLAMP, POLE
2	1	700385-01	BOLT, T SLOT 1/4-20 X 1
3	1	700391-01	ASSY, YAK RACK KNOB
4	1	90480A195	NUT, 10-32

REV NO	DATE	DESCRIPTION	ECN NO	BY

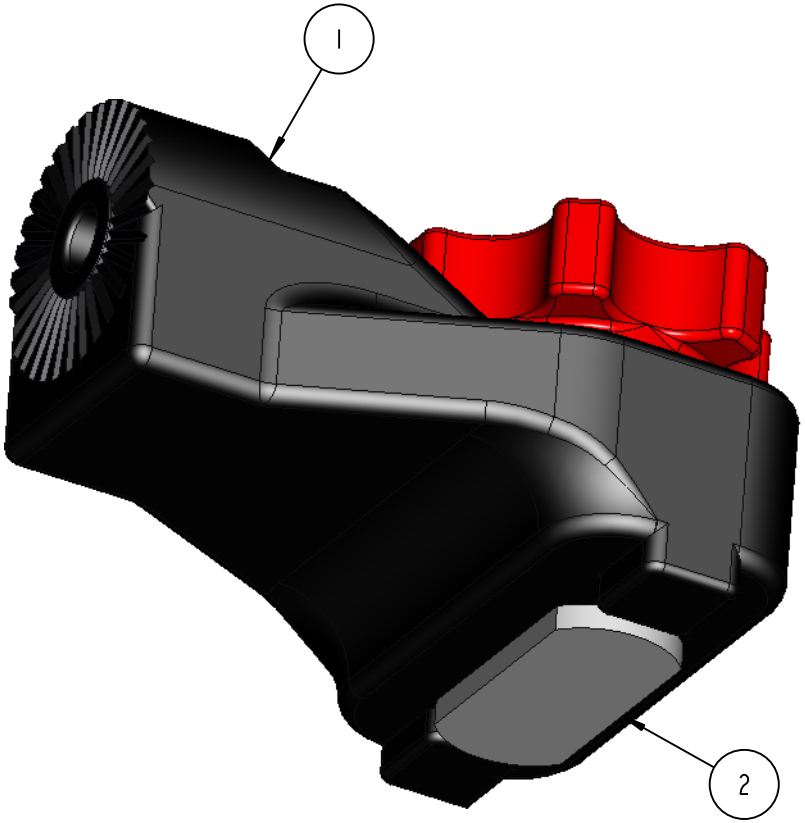

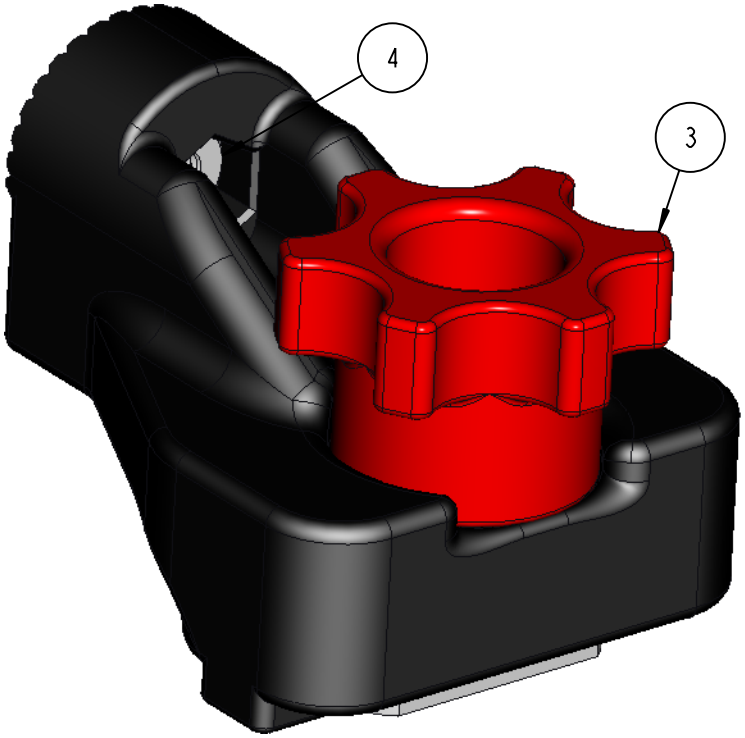

WEIGHT IN OZ.
N/A

DRAWN BY: A KEY	SCALE 1.500	DIMENSIONAL TOLERANCES UNLESS OTHERWISE NOTED .XX .01 / .XXX .005 / ANG. .5	MATERIAL: N/A	THIRD ANGLE PROJECTION	PROPRIETARY AND CONFIDENTIAL NO PORTION OF THIS DRAWING MAY BE QUOTED OR REPRODUCED IN ANY FORM WITHOUT THE EXPRESS WRITTEN PERMISSION OF RIDGE RUNNER GEAR, LLC. CANTON, GA 30114 USA
CHECKED BY:	DATE May-09-25	REMOVE ALL BURRS AND SHARP EDGES UNLESS OTHERWISE NOTED	HEAT TREAT: N/A	MODEL: YAKRACK	TITLE: ASSY, YAK MOUNT BASE
TRACED BY:	MASTER	ALL DIMENSIONS ARE FINISHED DIMENSIONS DO NOT SCALE - WORK TO DIMENSIONS ONLY	FINISH: N/A	SHEET NO.: 1OF2	DRAWING # 700389-01

RIDGE RUNNER

Trick Out Your Yak Rack: Optional Gear for Overachievers

Reel Rack: Hands-Free Fishing, Anywhere

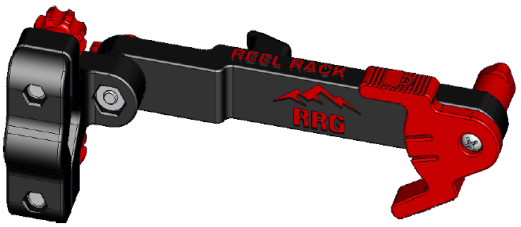

Turn any camp chair or pole into your personal fishing throne with the Reel Rack! This ultralight mount securely holds your Rocket Reel in place while you kick back and relax. The positive trigger mechanism gives you lightning-fast release when it's time to fight that fish. Super lightweight, rock-solid, and ridiculously convenient—because your hands deserve a break too.

Tack Rack:Your Chair's Tackle Sidekick

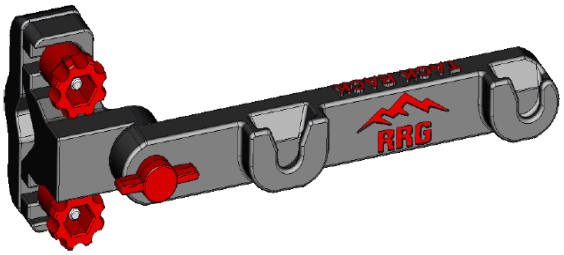

The Tack Rack keeps your Reel Rack right where you need it—mounted to your camp chair or any round pole for hands-free, hassle-free access. It's ultra-lightweight, packs down easy, and holds your tackle box snug so it won't budge... until you want it to. Sit back, relax, and let your chair do the organizing.

Rocket Reel:Your Cast-Anywhere Ticket to Dinner

Why pack two handles when one will do it all? Clip in the Rocket Reel kit and watch your Timber Tickler handle transform from a branch-busting saw grip into a fish-wrangling reel holder. One minute you're clearing campfire wood, the next you're pulling dinner out of the creek like a backwoods magician. It still fits the Ridge Runner belt clip system, so you can swap from "Paul Bunyan mode" to "Old Man and the Sea" in seconds flat — no toolbox, no hassle, just pure outdoorsy showmanship.

Tackle Toter: Your Belt-Mounted Bait Boss

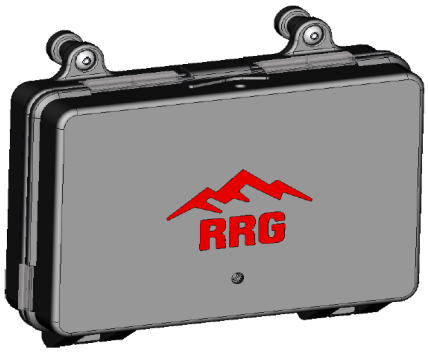

Meet the Tackle Toter—the tactical-grade tackle box that does it all. Your Rocket Reel snaps apart and mounts right to the front, making you ready to cast at a moment's notice. It clips onto quick-release belt mounts, fits standard MOLLE webbing like a glove, and connects seamlessly to the Yak Rack or Tack Rack for kayak or camp chair fishing. Use it while strapped to your belt like a true backcountry commando. Available in five models with up to 12 individually covered compartments—because organized chaos is still chaos.

Timber Tickler: One Handle, Endless Possibilities

Meet the Timber Tickler—the ultralight backpacking saw that moonlights as your Rocket Reel handle. Designed for serious weight savers, it breaks down to blade-length size for compact carry. With five scabbard-style sheath options (6", 9", and 12" blades available), it attaches to the same quick-release belt clip as your other RRG gear. The handle snaps to the sheath and locks tight with a clever wedge system—no wiggle, all wow. One handle + multiple blade sheaths = one smart, versatile saw that saves pack space *and* cash.

Don't just hike it — run the ridge at www.rrgruntheridge.com

Legal Notices & Policies

Copyright & Use Disclaimer

All content, images, instructions, and designs in this manual are the property of Ridge Runner Gear. Unauthorized reproduction, distribution, or commercial use of any part of this manual or product design is not permitted without written permission.
© 2025 Ridge Runner Gear. All rights reserved.

Liability Disclaimer

Ridge Runner Gear assumes no responsibility for any injury, damage, or loss resulting from the use or misuse of the Yak Rack. Users are responsible for reading and following all instructions provided in this manual. Kayaking and fishing both carry their own set of hazards — including but not limited to slippery decks, surprise waves, rogue hooks, tangled lines, and that one fish that nearly flips your boat. The Yak Rack keeps your gear up front — not your judgment in check. Always paddle safe, fish smart, and remember: it won't bail you out when your spouse asks why the garage looks more like a tackle shop than a two-car. Use the Yak Rack at your own risk.

Limited Warranty

Ridge Runner Gear warrants the Yak Rack to be free from defects in materials and workmanship under normal use for a period of 90 days from the date of purchase. This warranty applies only to the original purchaser and does not cover damage caused by misuse, abuse, modifications, improper maintenance, or normal wear and tear.
If a defect arises during the warranty period, Ridge Runner Gear will, at its discretion, repair or replace the defective part with proof of purchase. To submit a warranty claim, contact us at: www.rrgruntheridge.com

Return Policy

If you're not completely satisfied with your Yak Rack, you may return it within 30 days of purchase for a full refund or exchange. All returns must include an RMA (Return Merchandise Authorization) number. Items must be returned in unused condition with original packaging. Return shipping is the responsibility of the customer unless the product arrived damaged or defective. To initiate a return or exchange, contact us at: www.rrgruntheridge.com

A Word on 3D Printing

Our gear is proudly 3D printed, which means you may spot layer lines, tiny gaps, or slight weight differences. These are natural traits of the process and do not affect strength or performance. Color tones may also vary from batch to batch. While Ridge Runner Gear is a function over form company, we still care about aesthetics and hold every product to the highest standards possible. In short: it may not look like it came from a spaceship factory, but it'll perform like it belongs on your next adventure.