Subject: DLD Lab Report

Project Title: Password Security System

Group Members:

Names	Reg No
Mahad Khan	23MDBCS-341
Muhammad Talha	23MDBCS-347
Rifaq Ajmal	23MDBCS-435
Rohail Muneer	23MDBCS-450

Report for Digital Logic Design Project: Password Security System:

INTRODUCTION

The aim of this project is to design a basic password security system using digital logic components. The system uses D Flip-Flops (D FFs) and a 74LS85 4-bit magnitude comparator to compare a pre-set password with a user-entered password and indicate whether the entered password is correct.

COMPONENTS USED

1. 74LS85 4-Bit Magnitude Comparator:

Compares two 4-bit binary numbers.

Outputs whether the numbers are equal, or if one is greater or less than the other.

D FLIP-FLOPS (D FF):

Used to store the bits of the password.

CIRCUIT DESIGN

- 74LS85 Comparator

Inputs:

- A3, A2, A1, A0`: Pre-set password bits.
- B3, B2, B1, B0`: User-entered password bits.

Outputs:

- A=B`: High (1) if the passwords match.
- A>B` or `A<B`: High (1) if the passwords do not match.

D Flip-Flops

Four D Flip-Flops are used to store the 4-bit pre-set password.

Four more D Flip-Flops are used to store the 4-bit user-entered password.

HOW IT WORKS

- Password Storage:

The pre-set password is loaded into the D Flip-Flops connected to the `A` inputs of the 74LS85 comparator.

The user enters their password, which is loaded into the D Flip-Flops connected to the `B` inputs of the 74LS85 comparator.

COMPARISON:

The 74LS85 comparator checks if the pre-set password (`A` inputs) matches the user-entered password (`B` inputs).

The output will be high (1) if the passwords match.

OUTPUT:

If the passwords match, the output is high, indicating the entered password is correct.

If the passwords do not match the outputs will be high, indicating the entered password is incorrect.

CONCLUSION

This project demonstrates a basic password security system using digital logic components. By using D Flip-Flops and a 74LS85 comparator, the system can compare a user-entered password with a pre-set password and indicate whether they match. This project shows a simple application of digital logic in creating a functional security system.
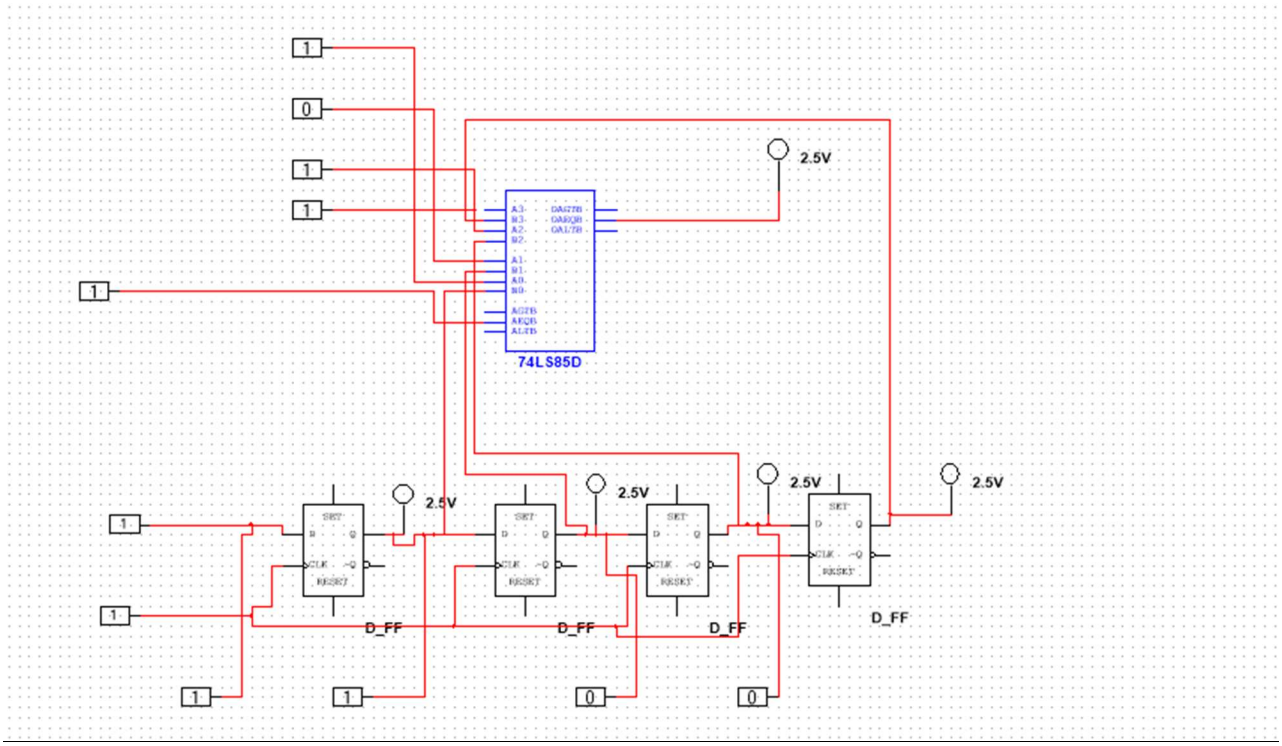
DESIGN