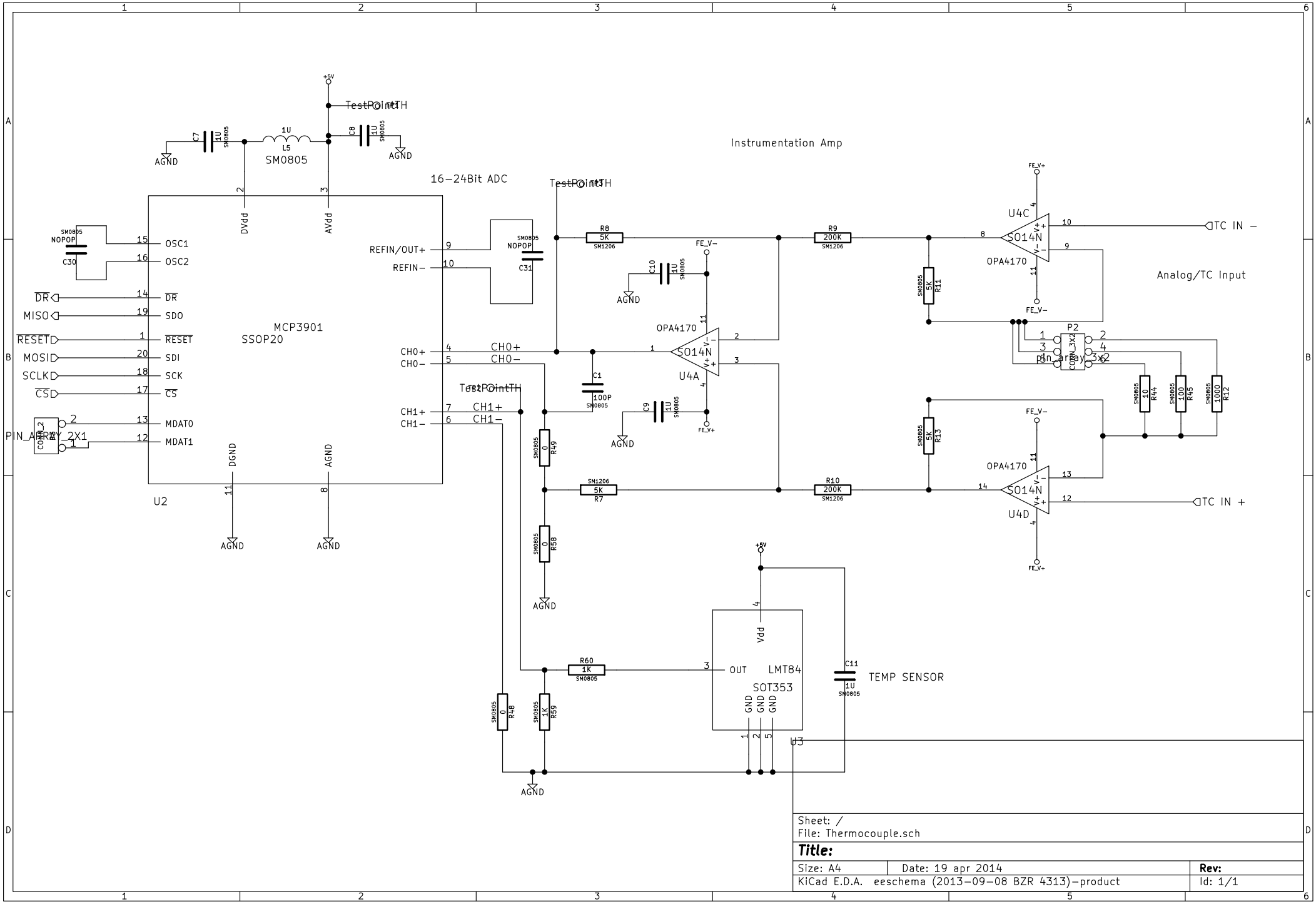
Instrumentation Amp
16-24Bit ADC
MCP3901
SSOP20
U2
OSC1
OSC2
DR
SDO
RESET
SDI
SCK
CS
MDAT0
MDAT1
DVdd
AVdd
DGND
AGND
REFIN/OUT+
REFIN-
CH0+
CH0-
CH1+
CH1-
PIN_ARRAY_2X1
TEMP SENSOR
LMT84
SOT353
U3
OUT
Vdd
GND
OPA4170
SO14N
U4A
U4C
U4D
Analog/TC Input
TC IN -
TC IN +
P2
pin array 3x2
FE_V+
FE_V-
+5V
TestPointTH
R8 5K
R9 200K
R10 200K
R7 5K
R11 5K
R13 5K
R44 10
R45 100
R12 1000
R49 0
R58 0
R48 0
R59 1K
R60 1K
C1 100P
C7 1U
C8 1U
C9 1U
C10 1U
C11 1U
C30 NOPOP
C31 NOPOP
L5 1U SM0805
Sheet: /
File: Thermocouple.sch
Title:
Size: A4
Date: 19 apr 2014
Rev:
KiCad E.D.A. eeschema (2013-09-08 BZR 4313)-product
Id: 1/1