The signal Digital5 was skipped so the pin numbers for all the following pins are off by one.

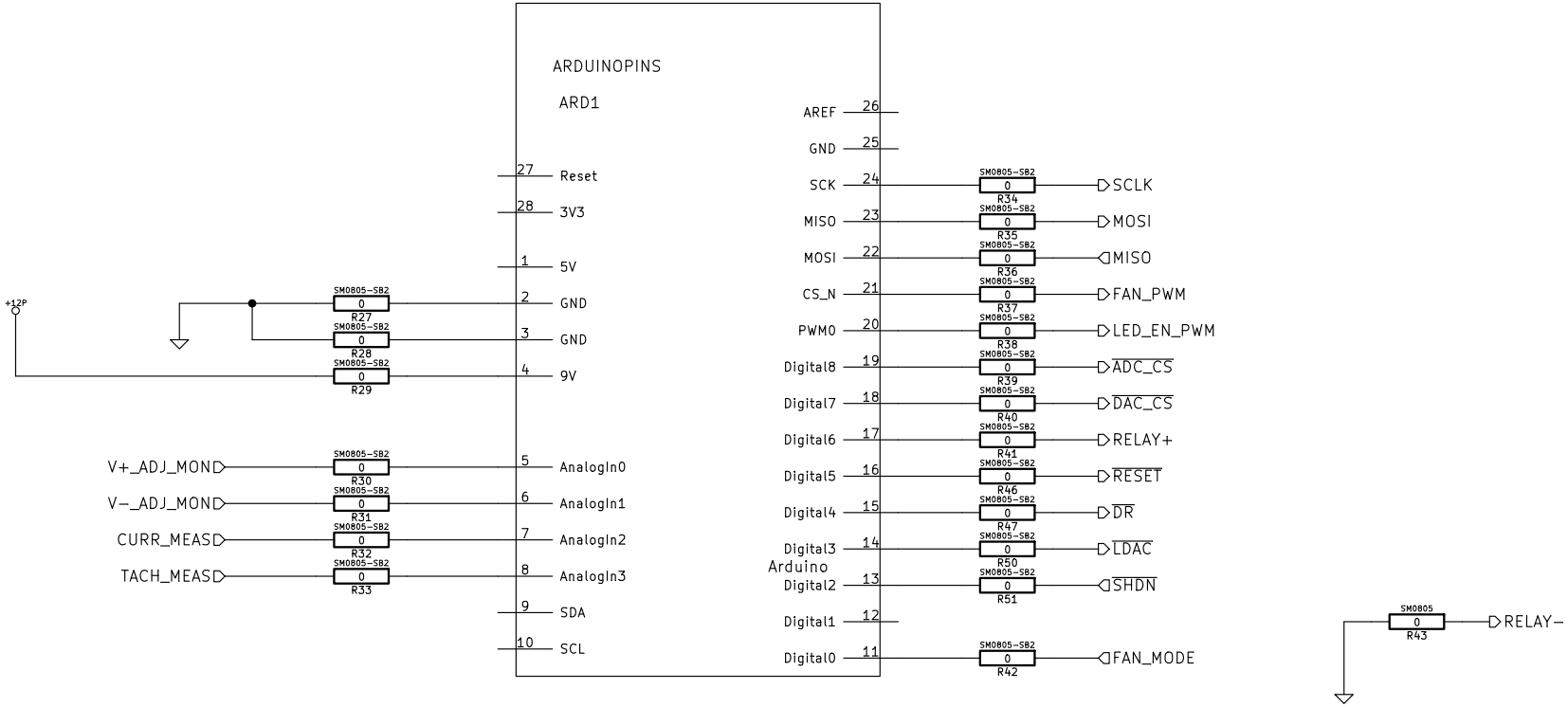

Sheet: /
File: Arduino.sch

Title:

Size: A4	Date: 19 apr 2014	**Rev:**
KiCad E.D.A. eeschema (2013-09-08 BZR 4313)-product		Id: 1/1