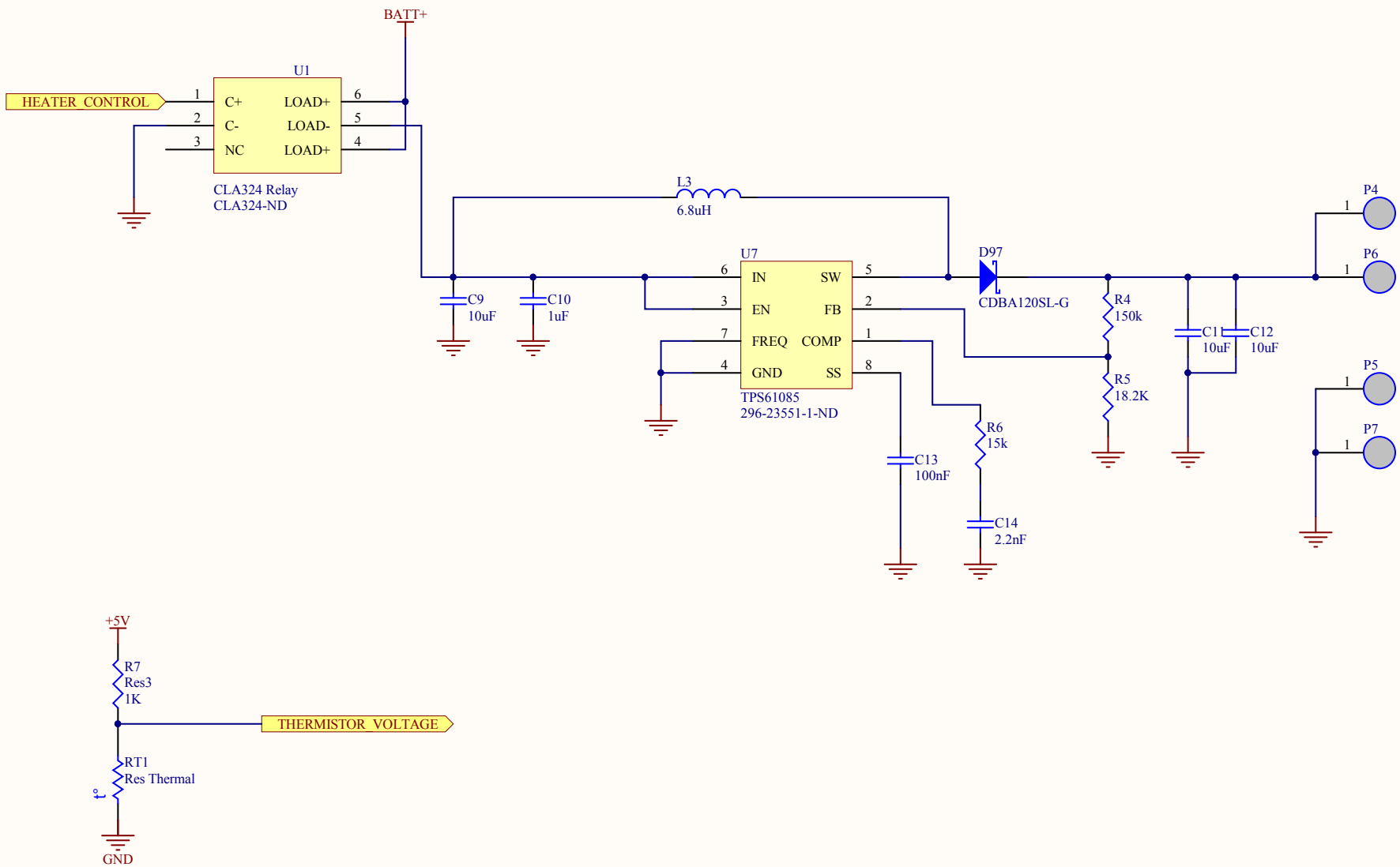

Title		
Size A	Number	Revision
Date: 6/5/2011		Sheet of
File: C:\Documents\..\Heater Driver.SchDoc		Drawn By:

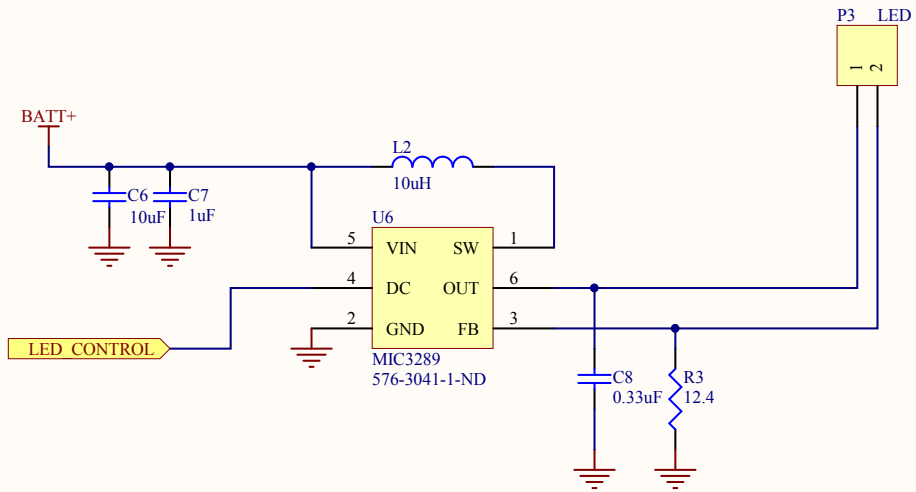

Title		
Size A	Number	Revision
Date: 6/5/2011		Sheet of
File: C:\Documents\..\LED Driver.SchDoc		Drawn By:

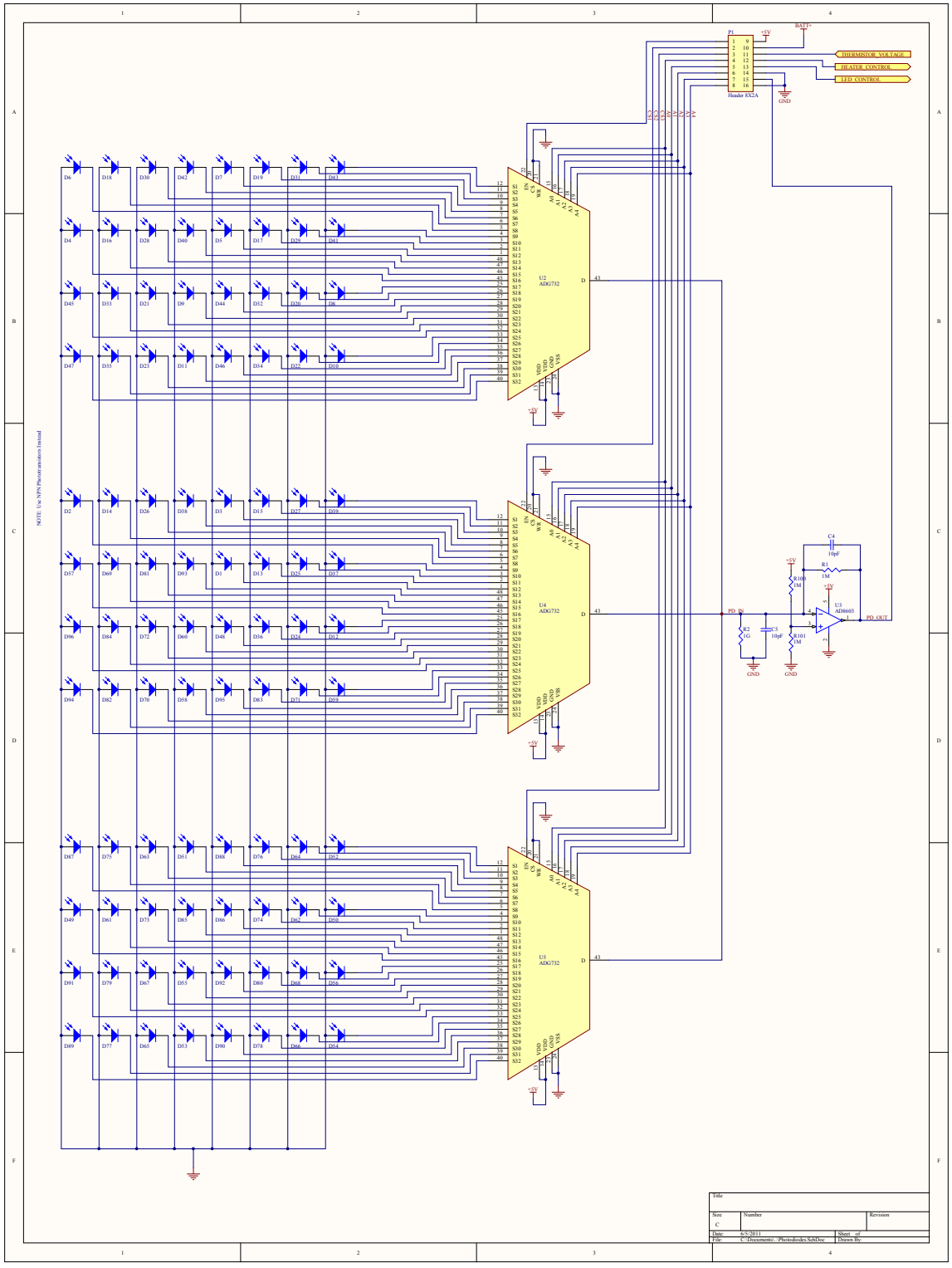

Title		
Size C	Number	Revision
Date: 6/5/2011		Sheet of
File: C:\Documents\...\Photodiodes.SchDoc		Drawn By:

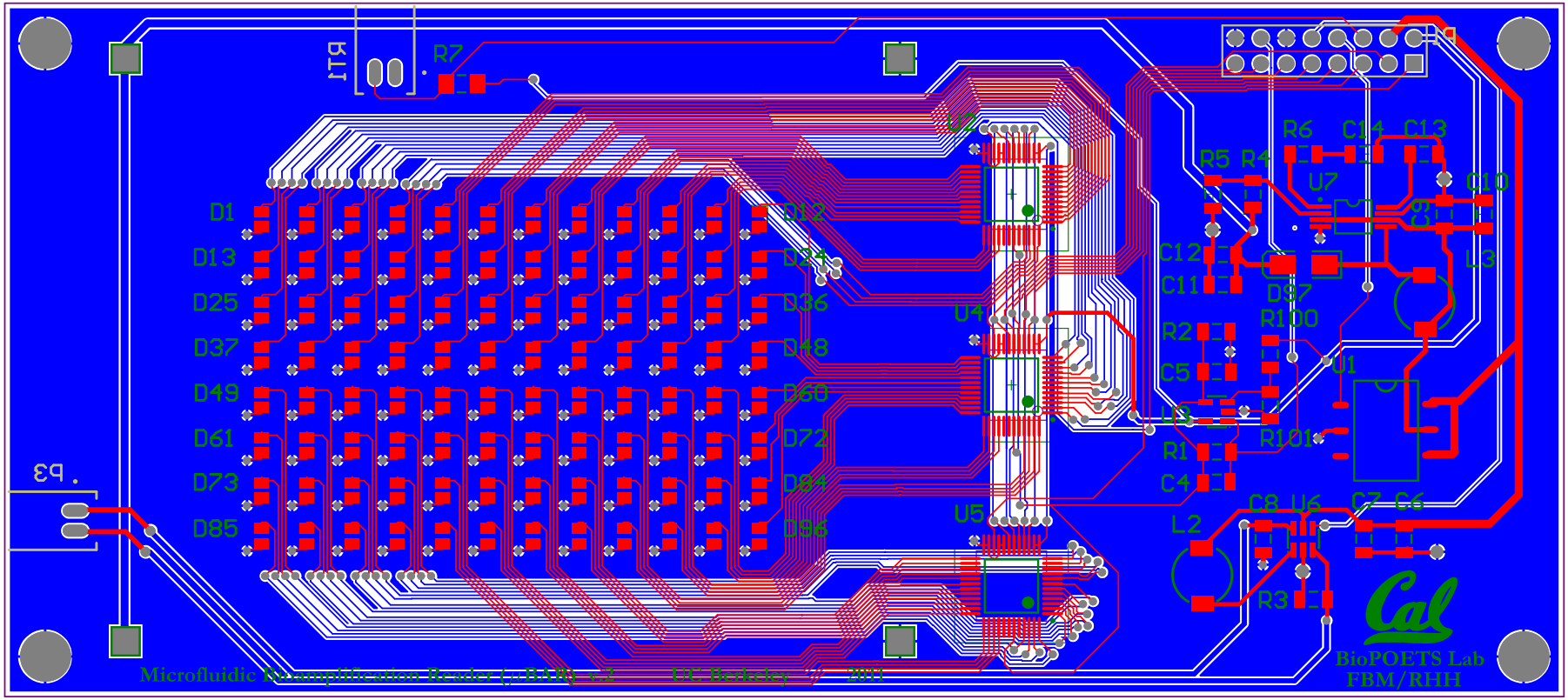
R11
R7
D1
D13
D25
D37
D49
D61
D73
D85
D12
D24
D36
D48
D60
D72
D84
D96
U4
U5
R5
R4
R6
C14
C13
U7
C10
C12
C11
D97
R100
L3
R2
C5
U1
R1
R101
C4
L2
C8
U6
C7
C6
R3
J3
BioPOETS Lab
FBM/RHH
Microfluidic Bioamplification Reader (µBAR) v2 UC Berkeley 2011