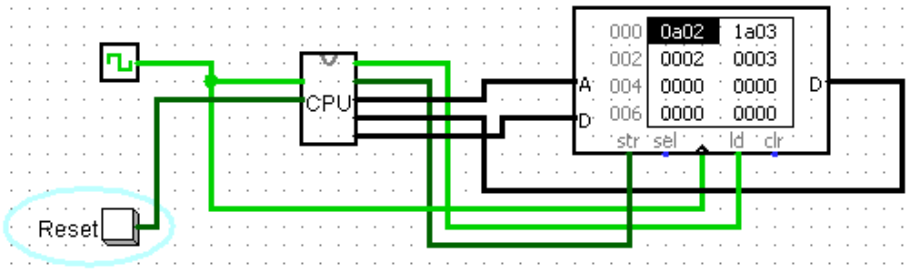

0 - AND
1 - OR
2 - ADD
3 - SUB
4 - STO
5 - LDA
6 - BUN
7 - JZ
8 - HLT
9 - JNZ
A - INC
B - DEC
C - 2's Complement
d-mul

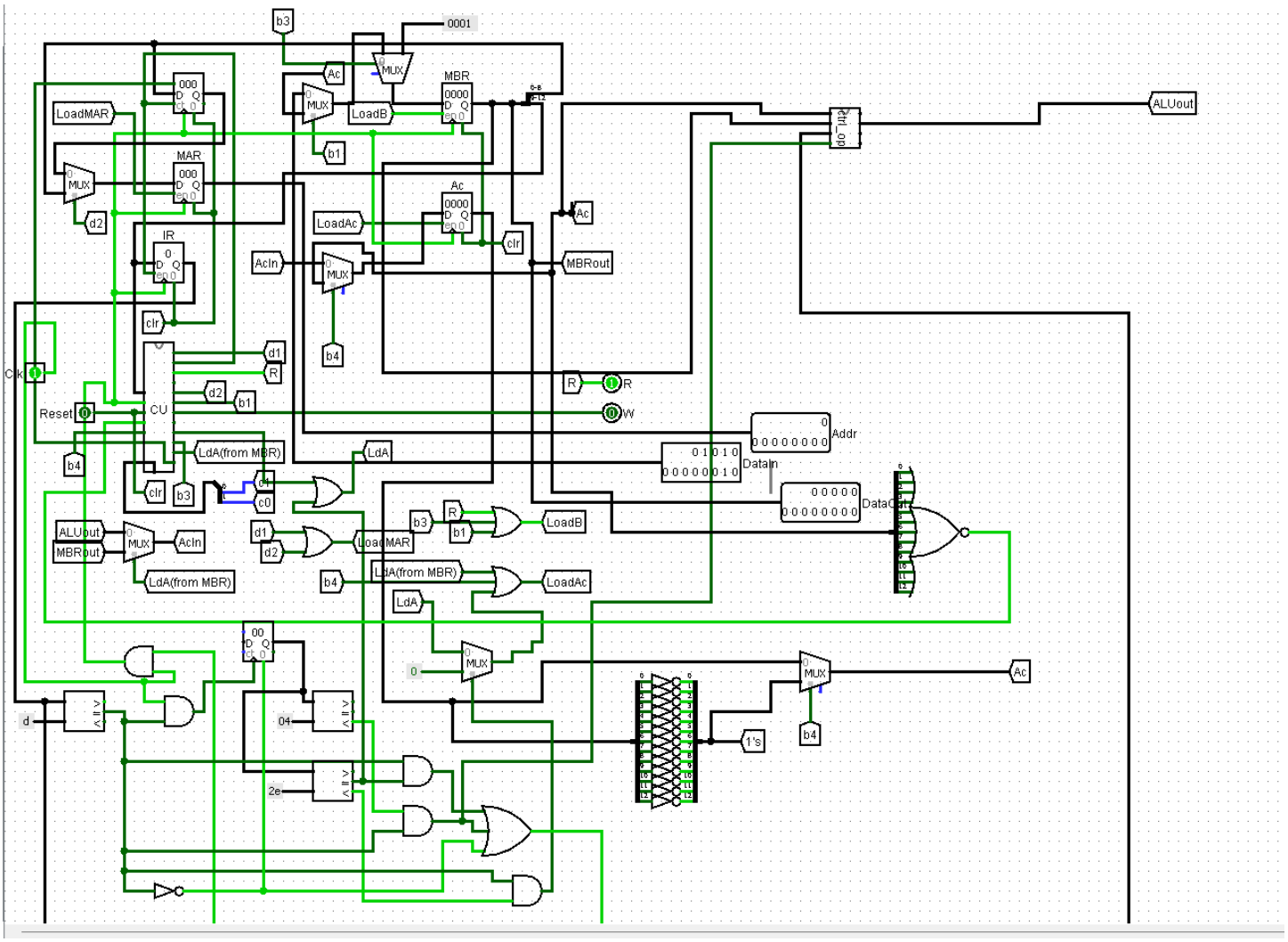

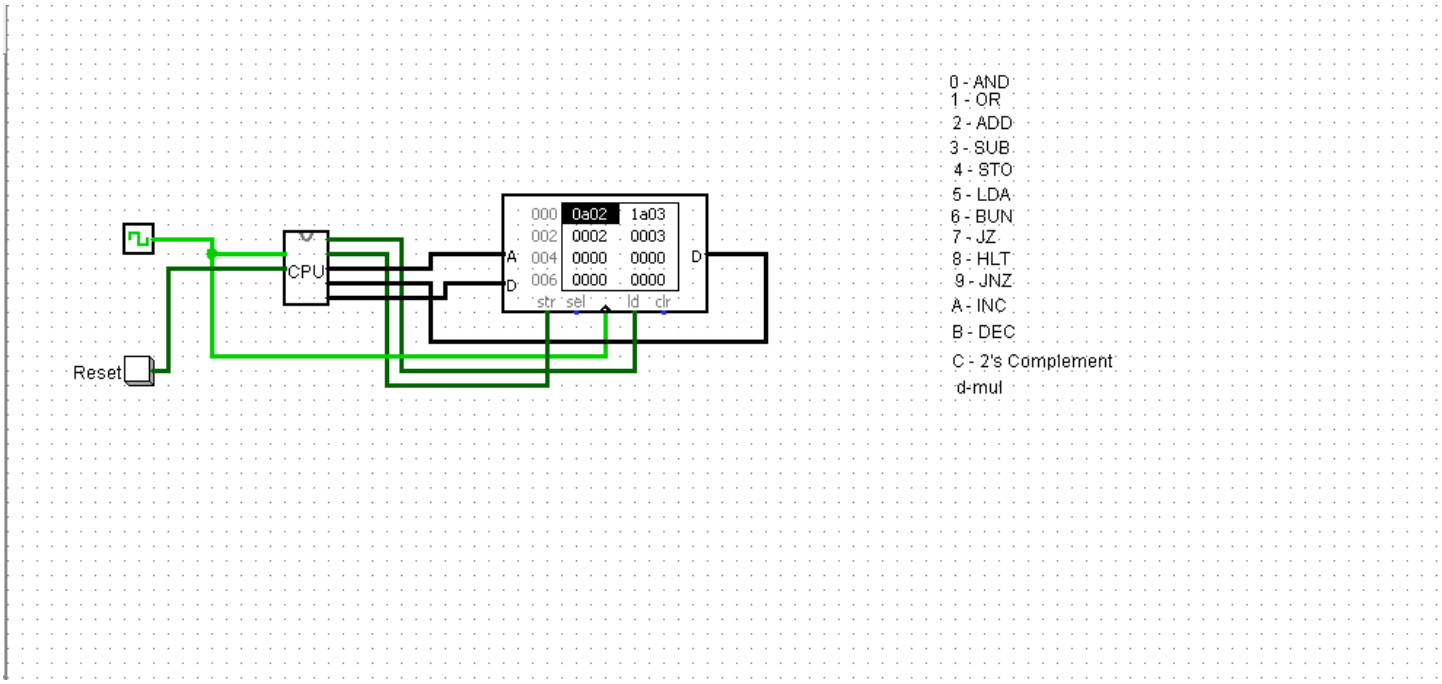
0 - AND
1 - OR
2 - ADD
3 - SUB
4 - STO
5 - LDA
6 - BUN
7 - JZ
8 - HLT
9 - JNZ
A - INC
B - DEC
C - 2's Complement
d-mul
CPU
Reset
000 0a02 1a03
002 0002 0003
004 0000 0000
006 0000 0000
str sel ld clr
A
D

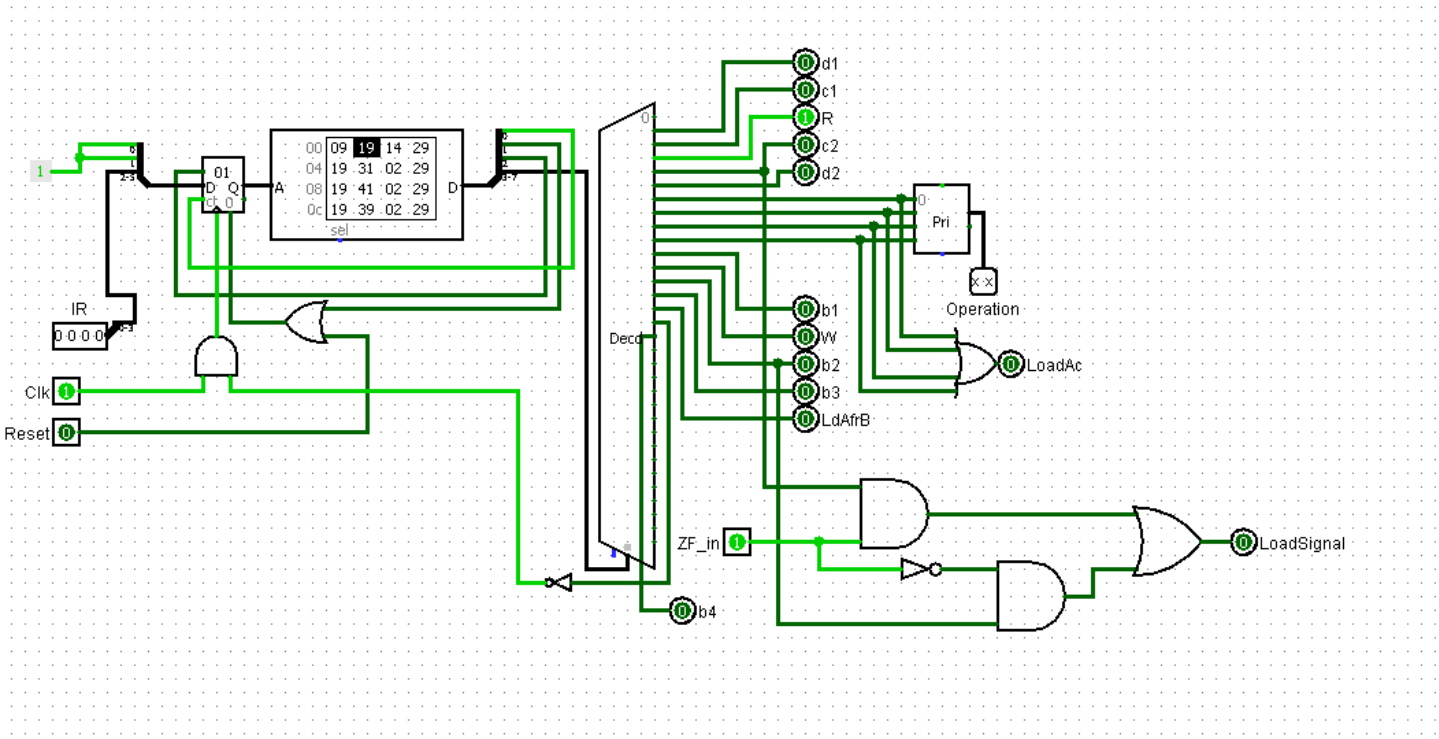
d1
c1
R
c2
d2
Pri
Operation
LoadAc
b1
W
b2
b3
LdAfrB
Decd
ZF_in
b4
LoadSignal
IR
0 0 0 0
Clk
Reset
00 09 19 14 29
04 19 31 02 29
08 19 41 02 29
0c 19 39 02 29
sel
A
D

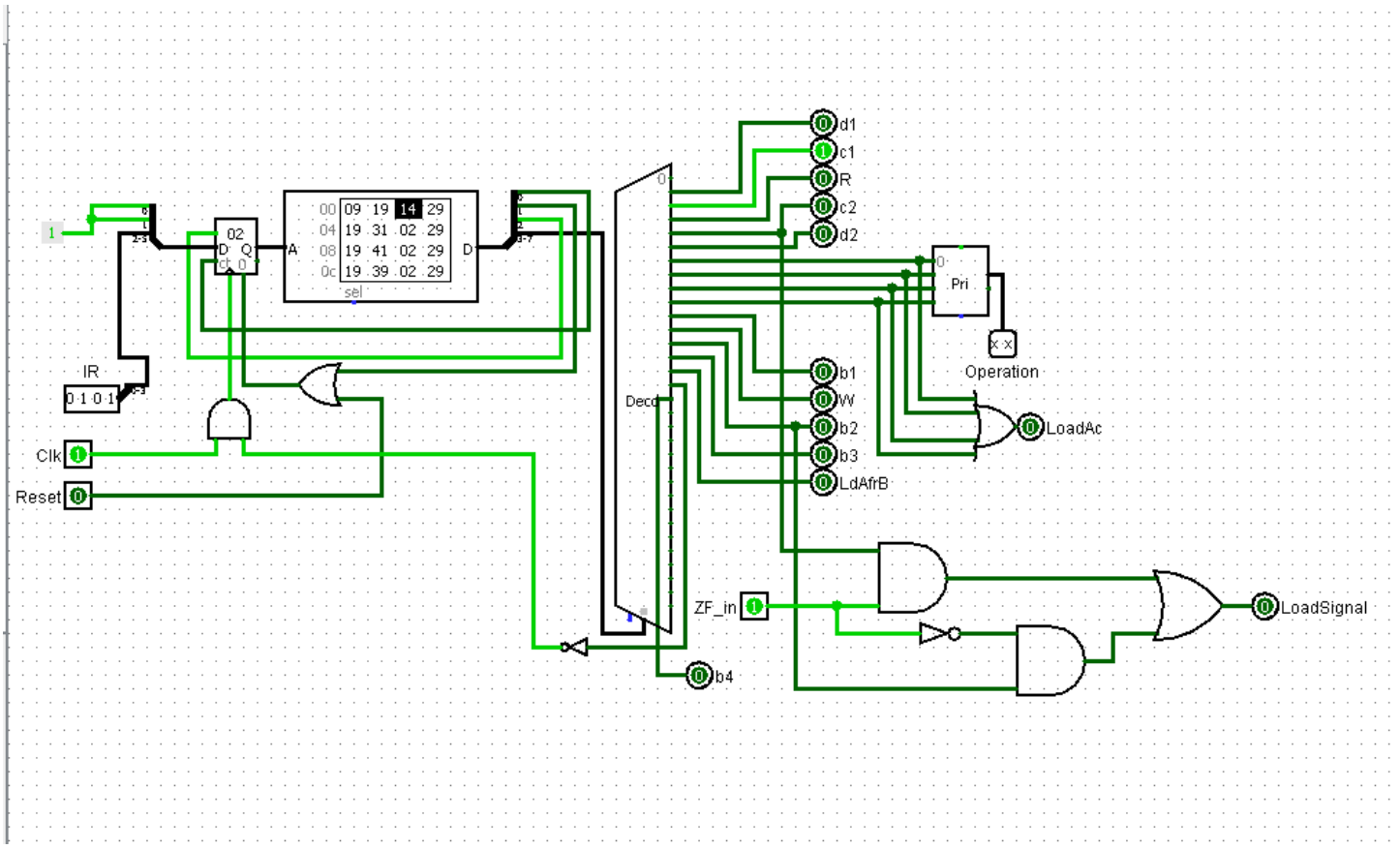

d1
c1
R
c2
d2
Pri
Operation
LoadAc
b1
W
b2
b3
LdAfrB
Decd
IR
Clk
Reset
ZF_in
LoadSignal
b4

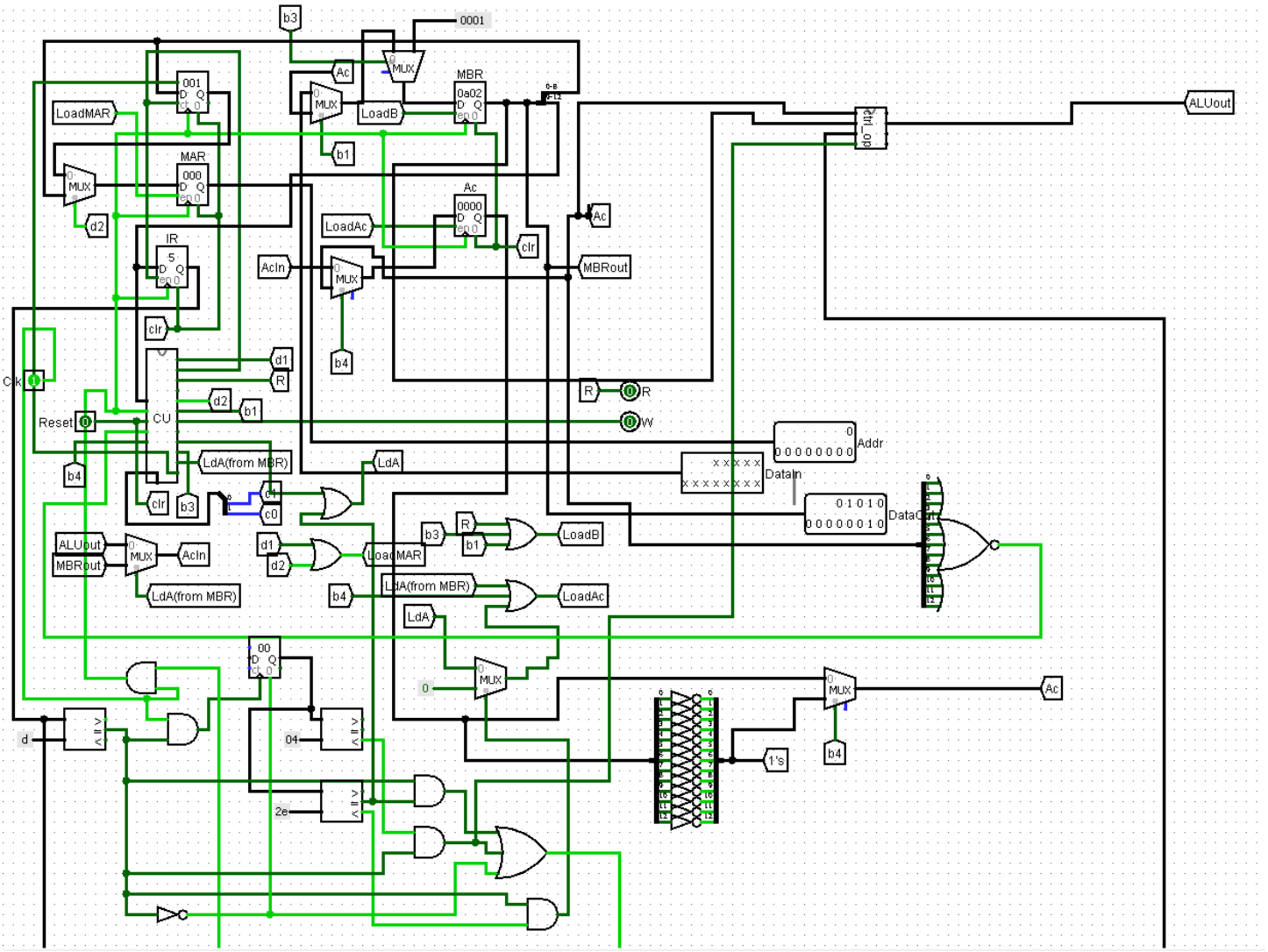

b3
0001
MUX
Ac
MBR
LoadB
LoadMAR
MAR
IR
LoadAc
AcIn
MBRout
ALUout
clr
Clk
Reset
CU
LdA(from MBR)
LdA
Addr
DataIn
DataOut
LoadMAR
LoadAc
1's

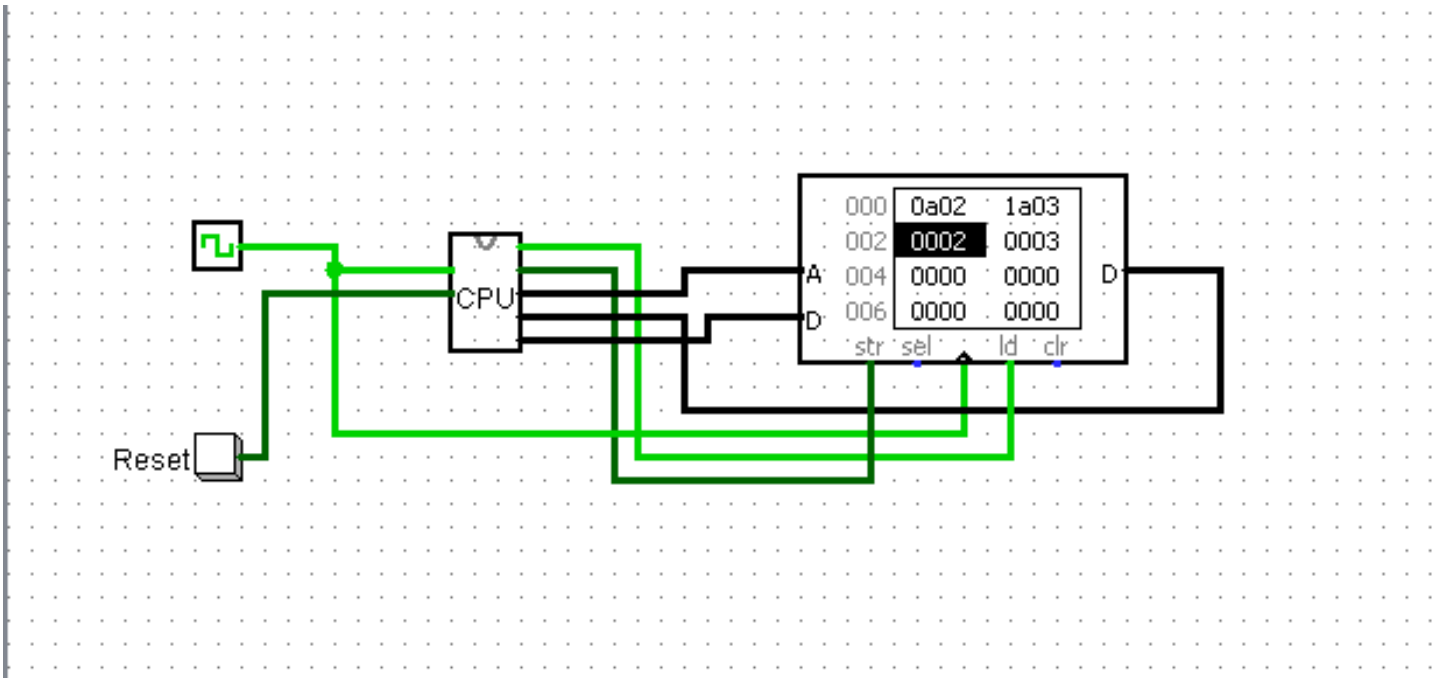
CPU
Reset
A
D
000 0a02 1a03
002 0002 0003
004 0000 0000
006 0000 0000
str sel ld clr

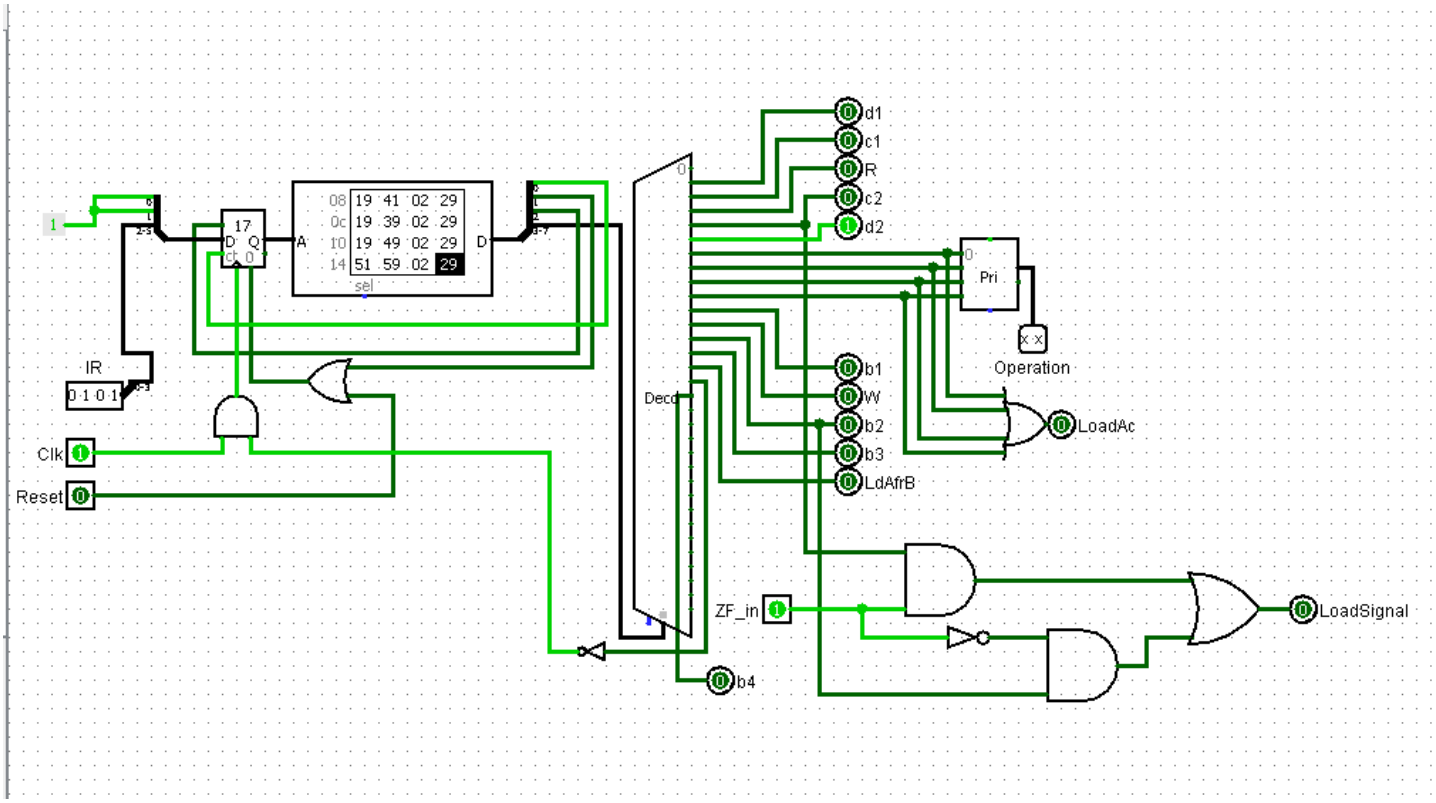
17
D Q
ck 0
A
D
08 19 41 02 29
0c 19 39 02 29
10 19 49 02 29
14 51 59 02 29
sel
IR
0 1 0 1
Clk
Reset
Decd
d1
c1
R
c2
d2
Pri
Operation
b1
W
b2
b3
LdAfrB
LoadAc
ZF_in
b4
LoadSignal

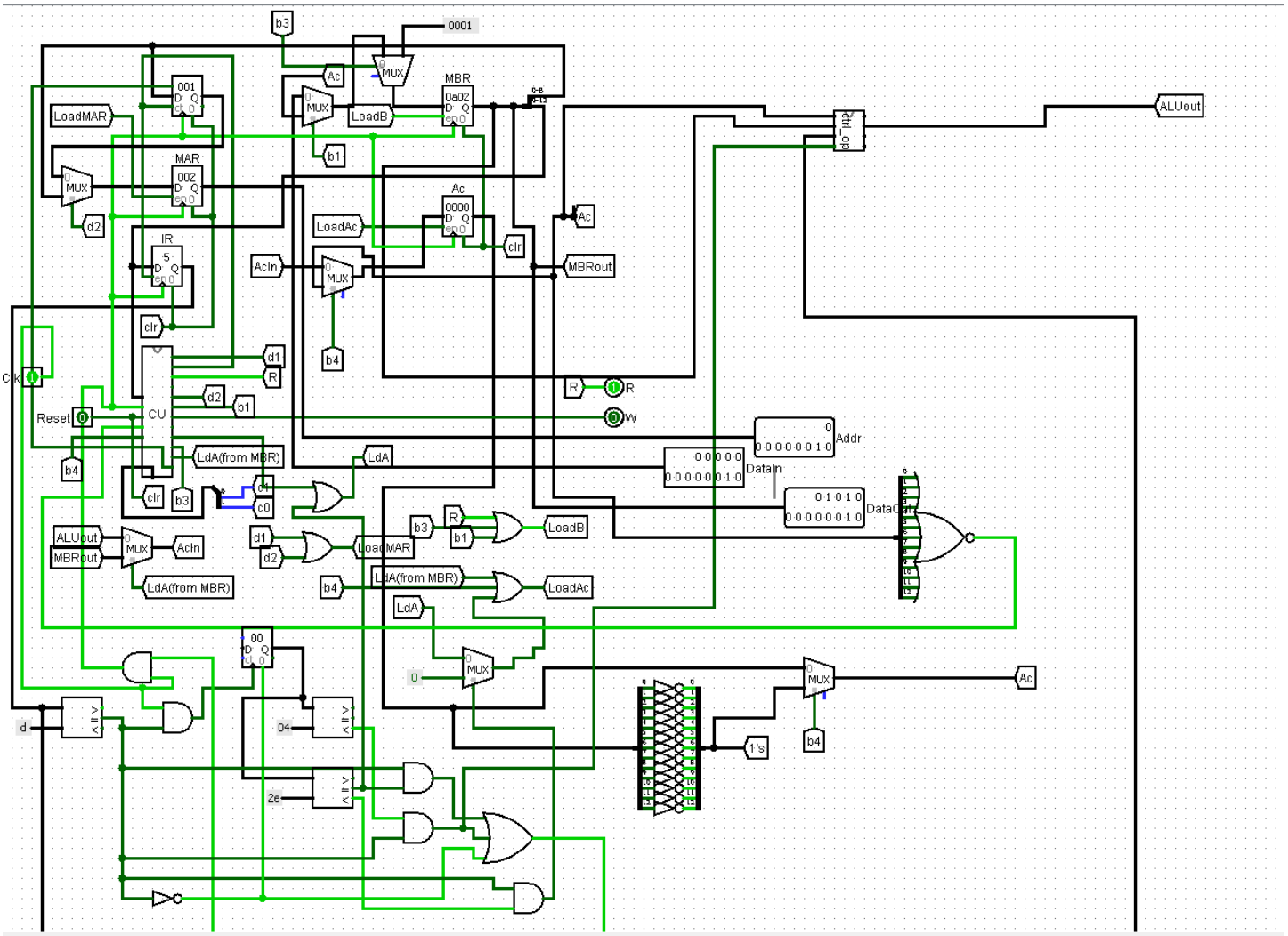

b3
0001
Ac
MUX
MBR
0a02
LoadB
LoadMAR
001
MAR
002
b1
ALUout
ctrl_op
d2
IR
5
LoadAc
Ac
0000
clr
AcIn
MBRout
b4
Clk
d1
R
CU
Reset
W
Addr
LdA(from MBR)
LdA
DataIn
DataOut
c1
c0
ALUout
MBRout
AcIn
LoadMAR
LoadB
LdA(from MBR)
LoadAc
LdA
00
0
04
2e
d
1's

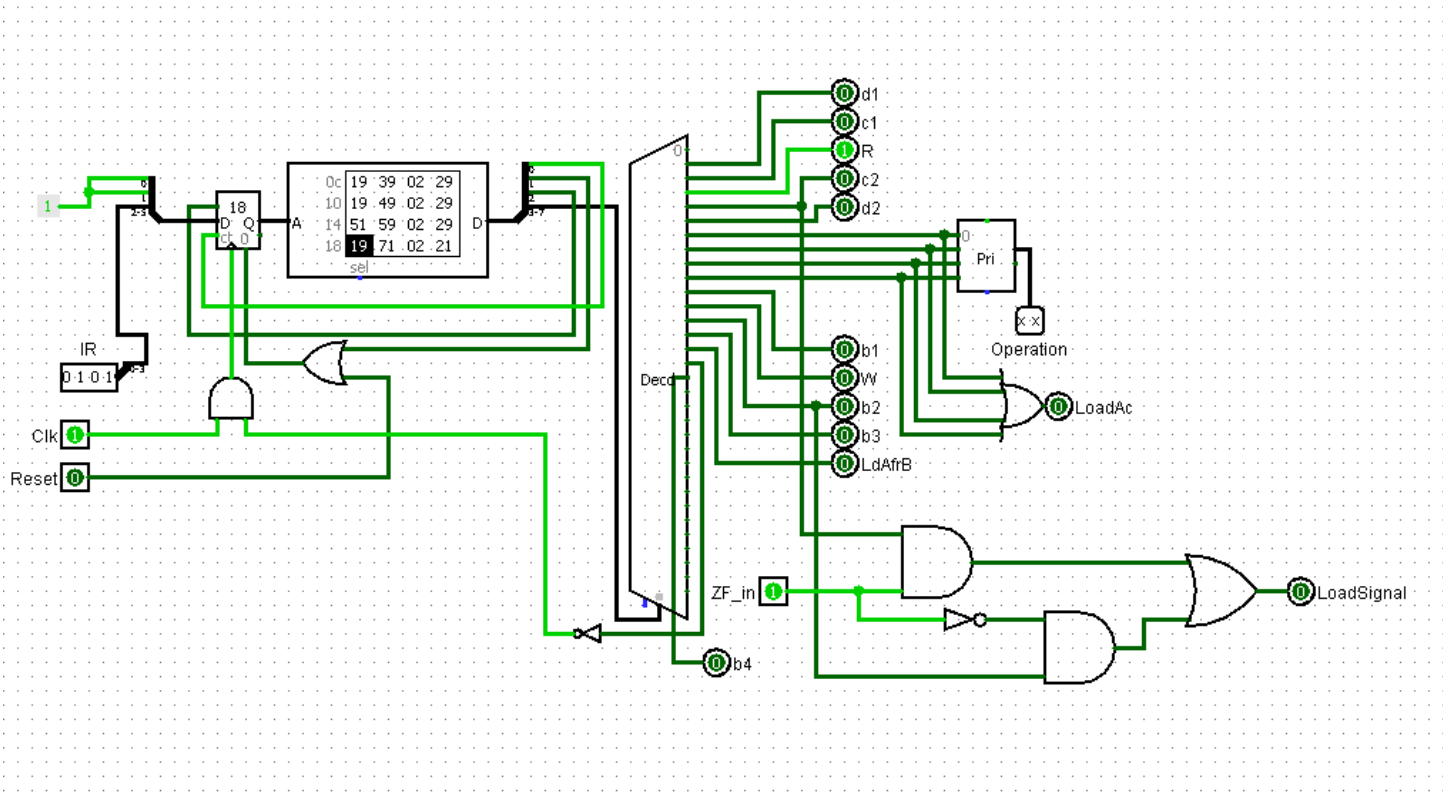

1
18
A
D
sel
IR
Clk
Reset
d1
c1
R
c2
d2
Pri
Operation
b1
W
b2
b3
LdAfrB
LoadAc
Decd
ZF_in
LoadSignal
b4

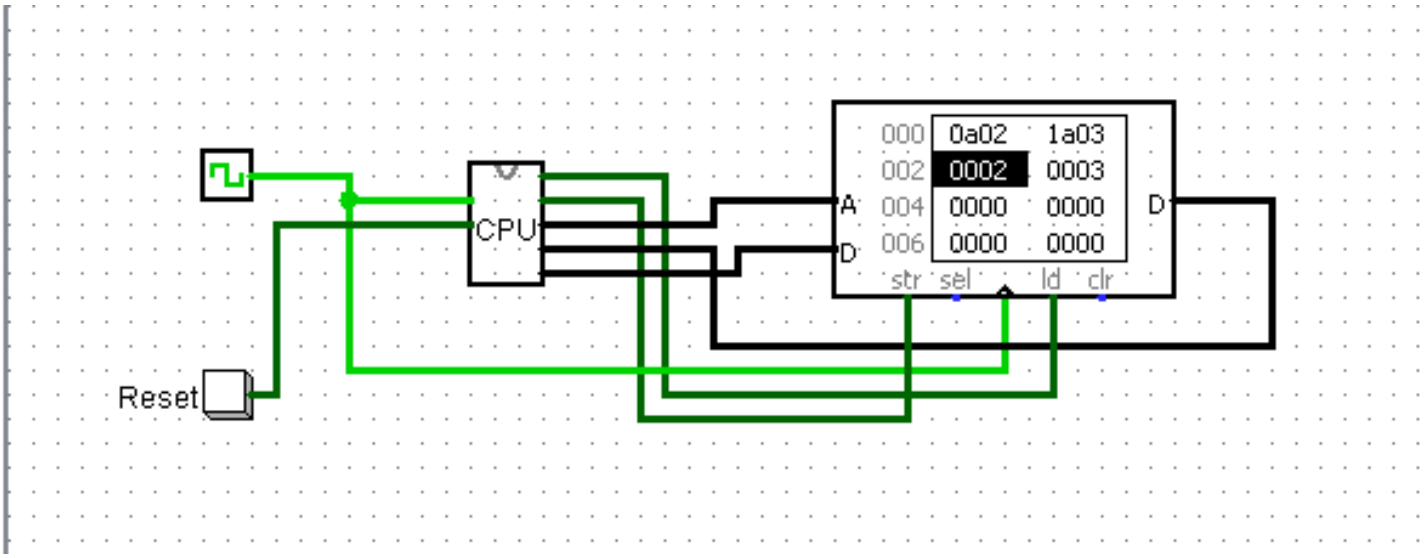
CPU
Reset
A
D
000 0a02 1a03
002 0002 0003
004 0000 0000
006 0000 0000
str sel ld clr

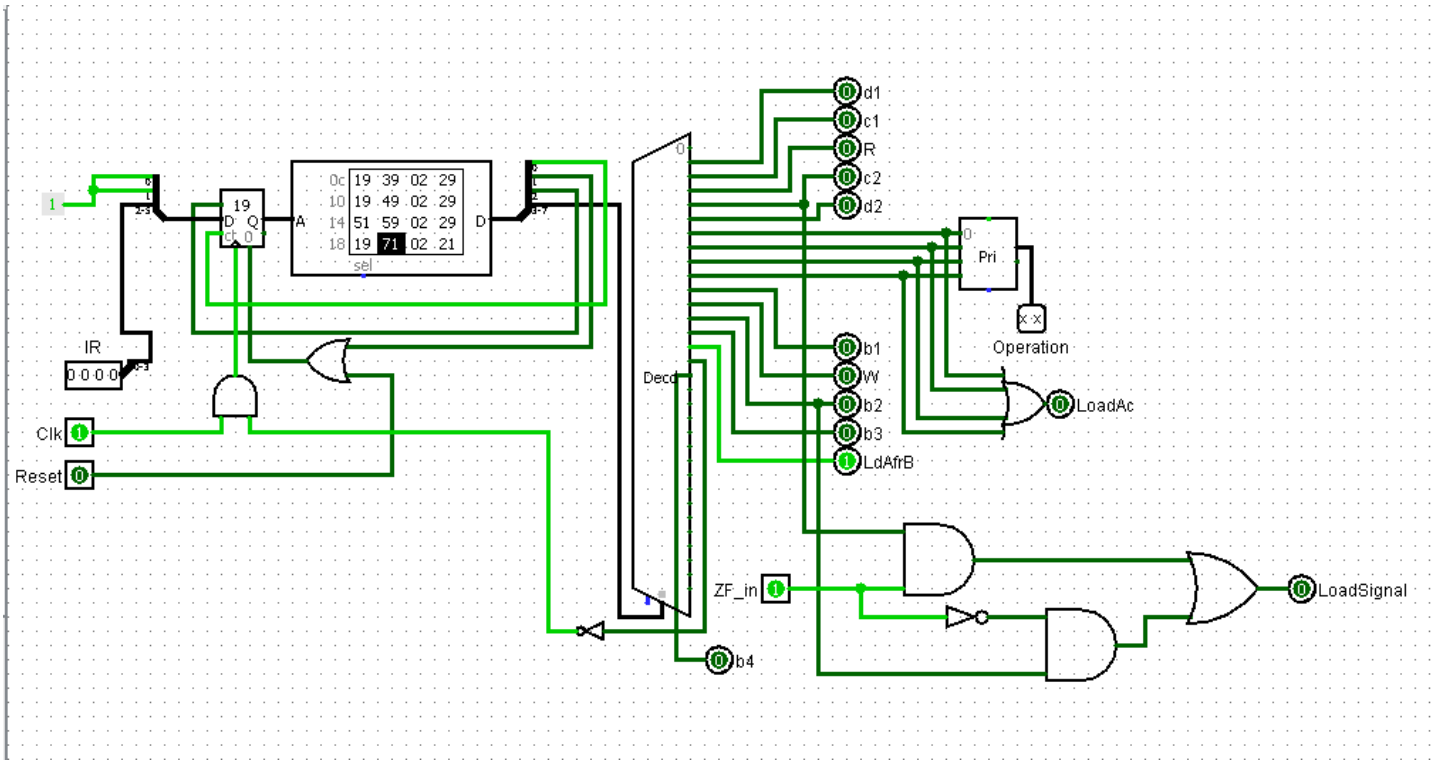
IR
Clk
Reset
19
A
D
0c 19 39 02 29
10 19 49 02 29
14 51 59 02 29
18 19 71 02 21
sel
Deco
d1
c1
R
c2
d2
b1
W
b2
b3
LdAfrB
b4
Pri
Operation
LoadAc
ZF_in
LoadSignal

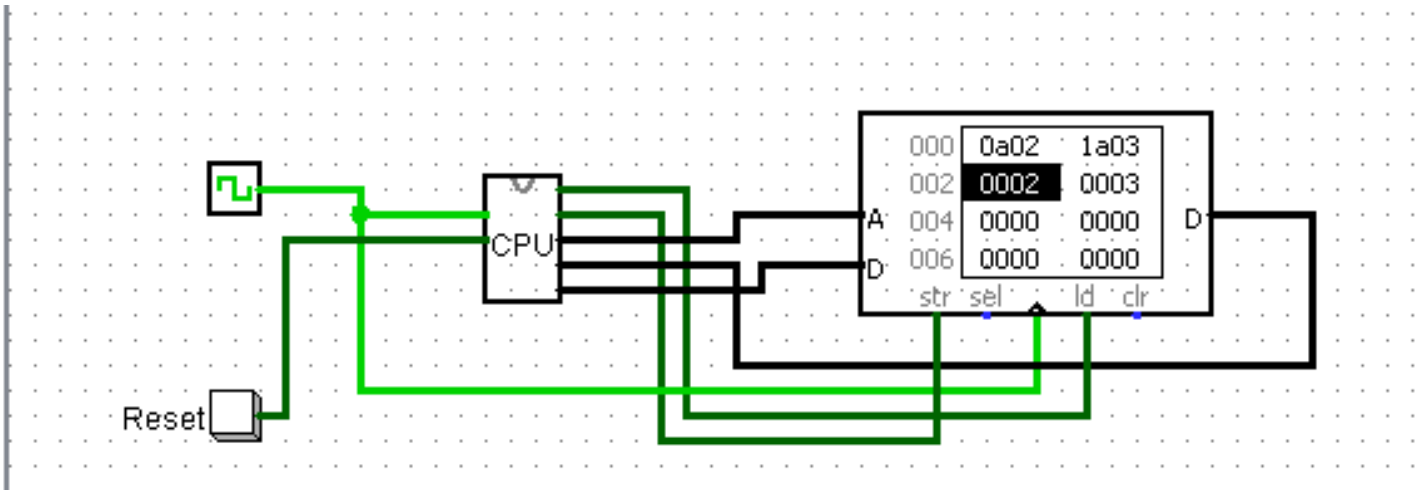
CPU
Reset
A
D
000 0a02 1a03
002 0002 0003
004 0000 0000
006 0000 0000
str sel ld clr

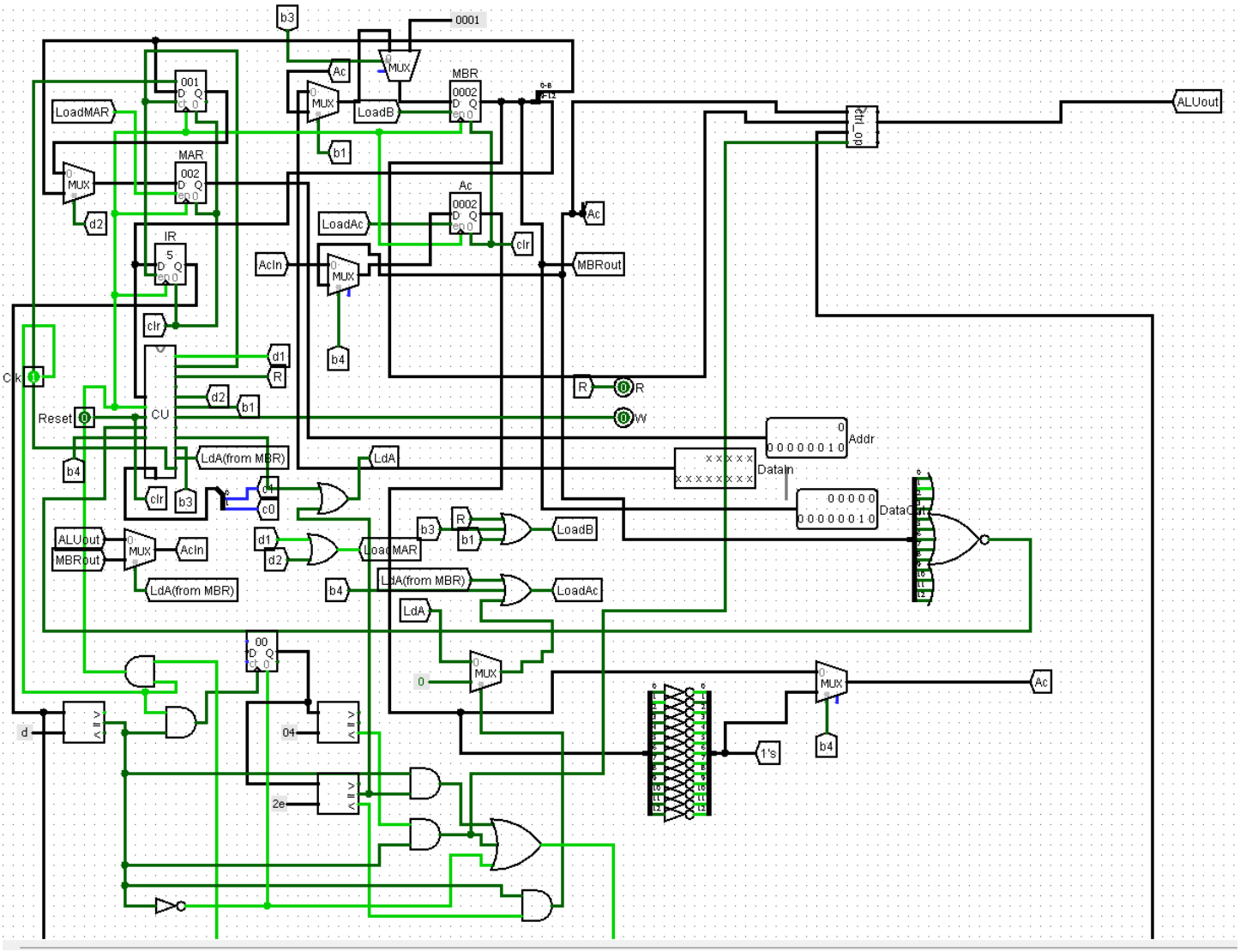

b3
0001
Ac
MUX
MBR
0002
LoadB
LoadMAR
001
MAR
002
b1
d2
IR
5
LoadAc
Ac
0002
clr
AcIn
MBRout
ALUout
b4
Clk
CU
d1
R
Reset
LdA(from MBR)
LdA
Addr
DataIn
DataOut
c1
c0
LoadMAR
LoadB
LoadAc
00
04
2e
d
1's

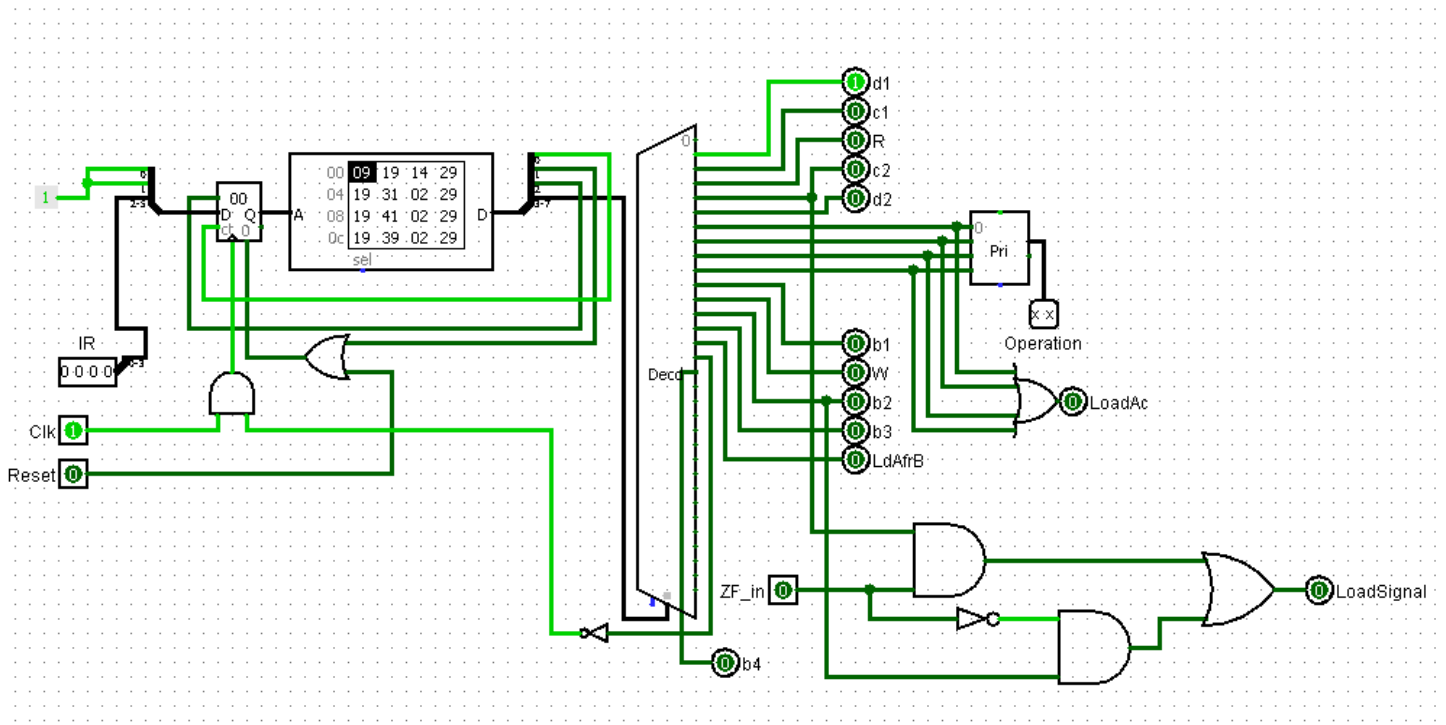

1
00
A
D
sel
IR
Clk
Reset
d1
c1
R
c2
d2
Pri
Operation
b1
W
b2
b3
LdAfrB
LoadAc
Decd
ZF_in
LoadSignal
b4

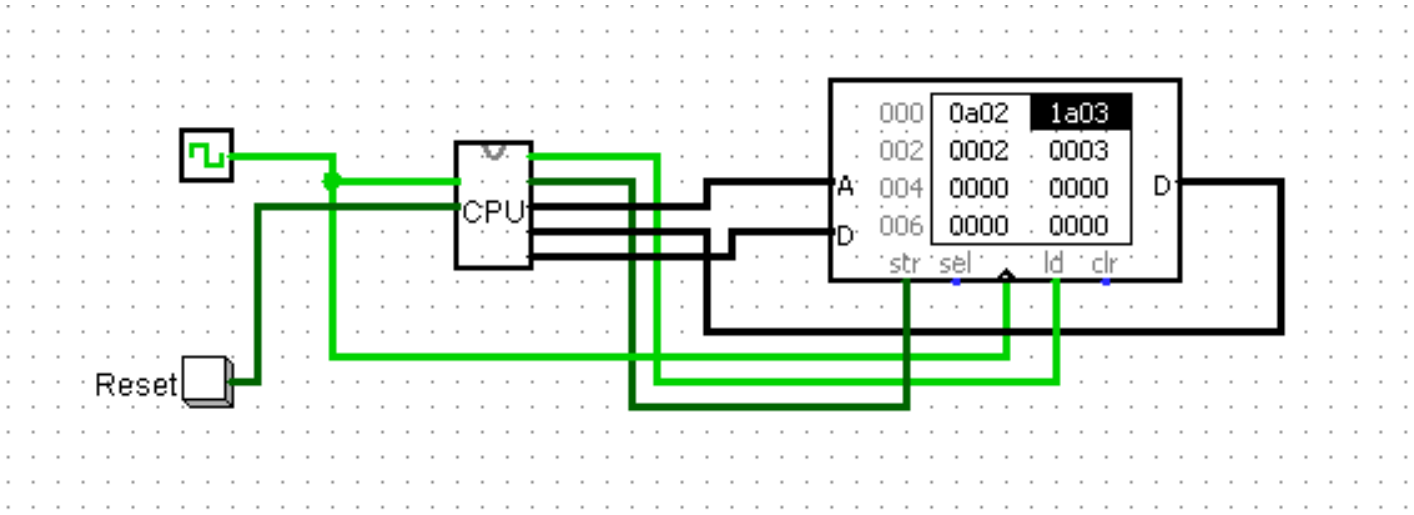

CPU
Reset
000 0a02 1a03
002 0002 0003
004 0000 0000
006 0000 0000
A
D
D
str sel ld clr

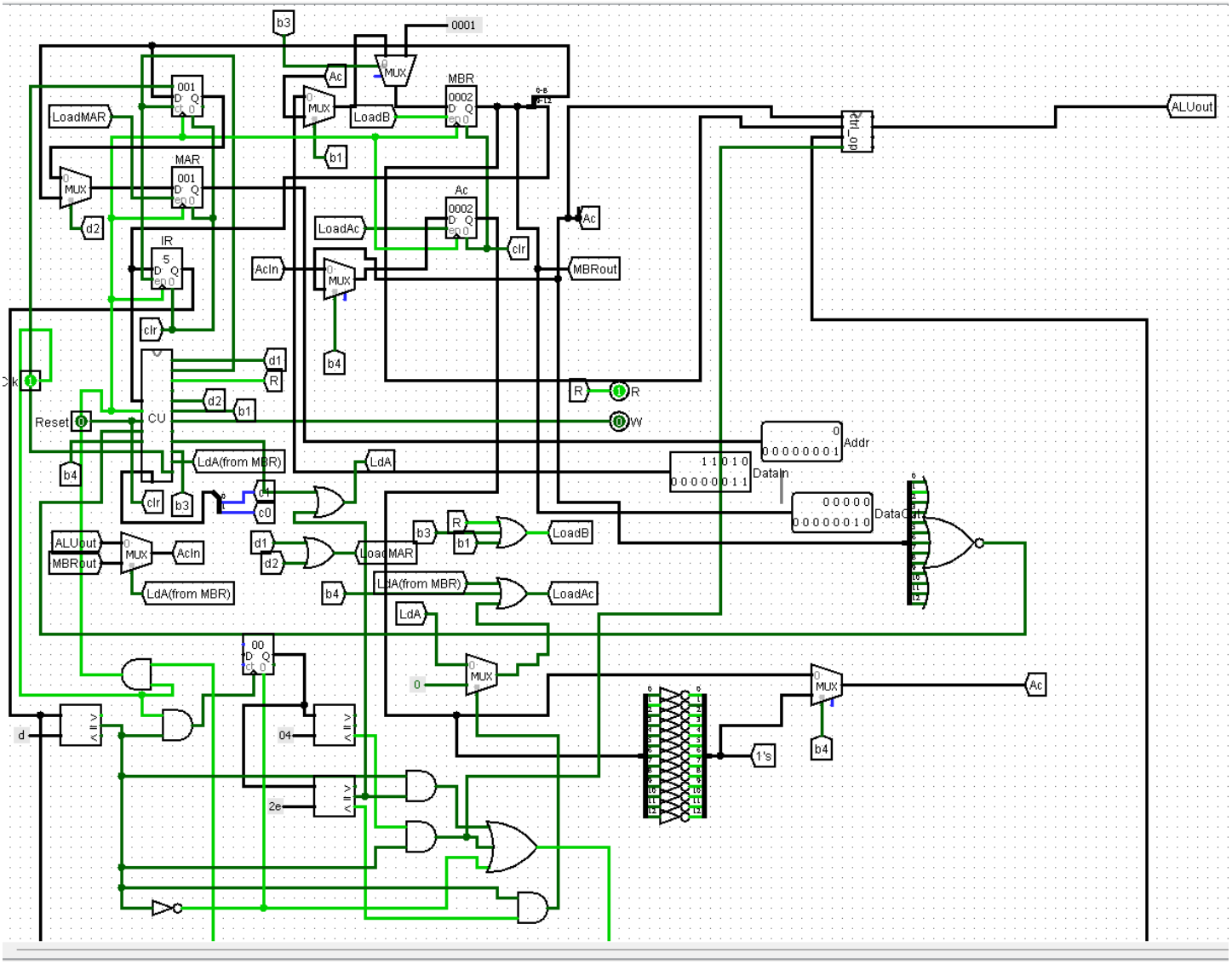

b3
0001
MUX
Ac
MBR
0002
LoadB
b1
LoadMAR
001
MAR
001
d2
IR
5
clr
LoadAc
Ac
0002
clr
AcIn
MBRout
b4
ALUout
Ctrl_op
d1
R
d2
b1
CU
Reset
b4
LdA(from MBR)
LdA
clr
b3
c0
R
W
Addr
DataIn
DataOut
ALUout
MBRout
AcIn
LdA(from MBR)
d1
d2
LoadMAR
b3
R
b1
LoadB
b4
LdA(from MBR)
LoadAc
LdA
00
0
MUX
Ac
b4
1's
d
04
2e

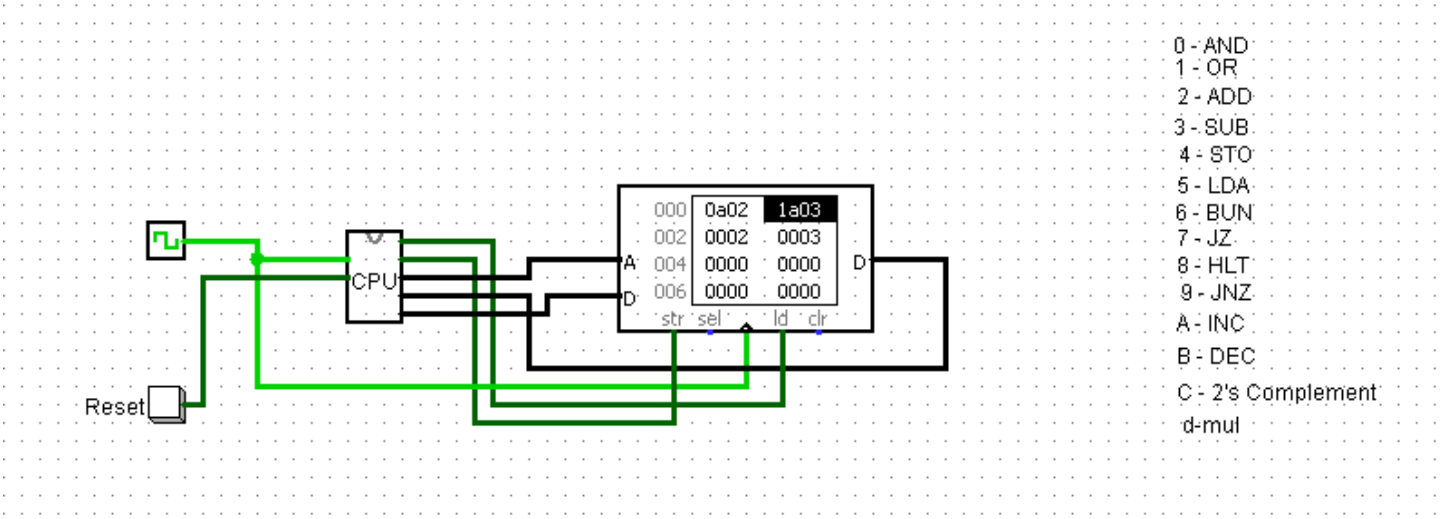
CPU
Reset
000 0a02 1a03
002 0002 0003
004 0000 0000
006 0000 0000
A
D
str sel ld clr
0 - AND
1 - OR
2 - ADD
3 - SUB
4 - STO
5 - LDA
6 - BUN
7 - JZ
8 - HLT
9 - JNZ
A - INC
B - DEC
C - 2's Complement
d-mul

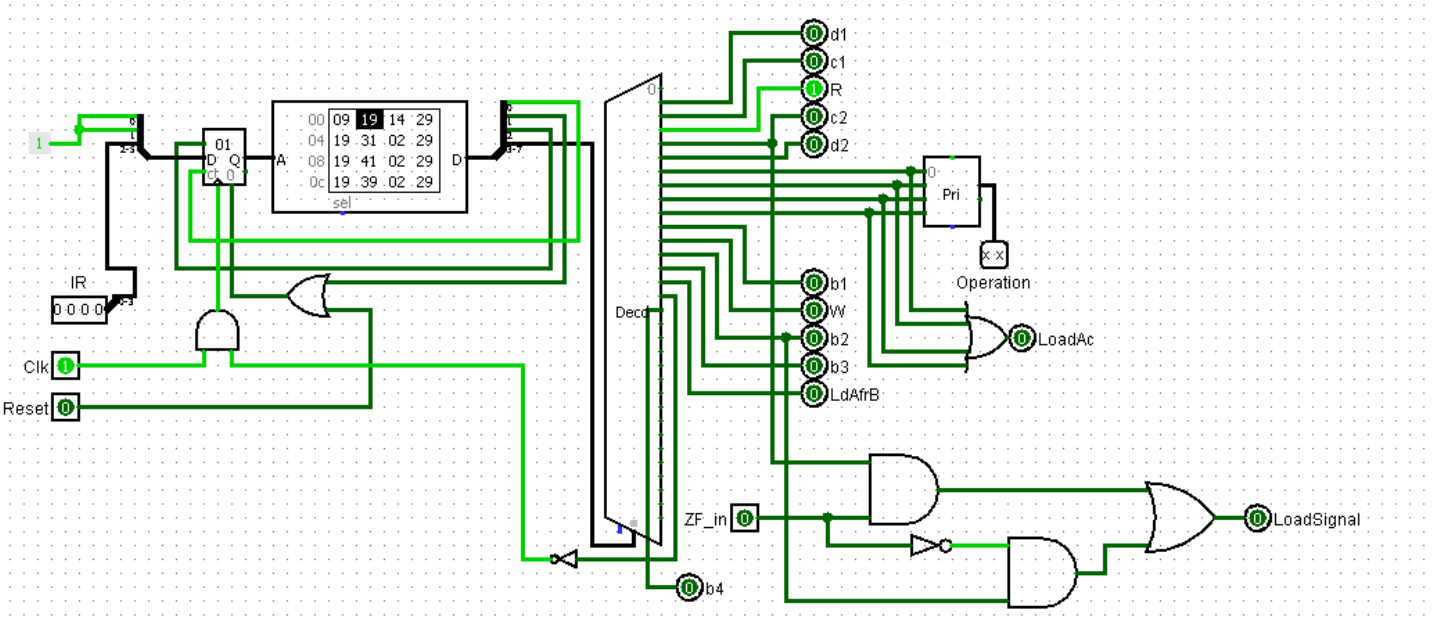
01
00 09 19 14 29
04 19 31 02 29
08 19 41 02 29
0c 19 39 02 29
sel
IR
0 0 0 0
Clk
Reset
Decd
d1
c1
R
c2
d2
Pri
Operation
b1
W
b2
b3
LdAfrB
LoadAc
ZF_in
b4
LoadSignal

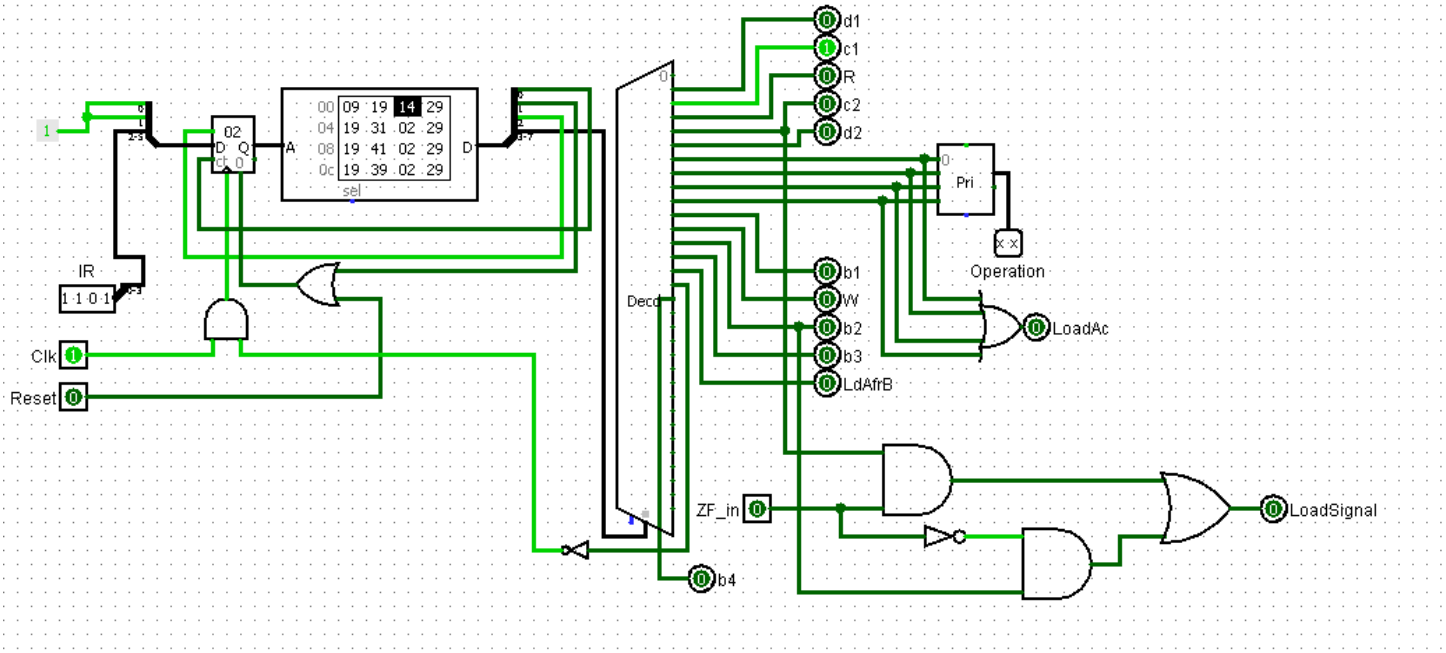
02
00 09 19 14 29
04 19 31 02 29
08 19 41 02 29
0c 19 39 02 29
sel
IR
1 1 0 1
Clk
Reset
Decd
d1
c1
R
c2
d2
Pri
Operation
b1
W
b2
b3
LdAfrB
LoadAc
ZF_in
b4
LoadSignal

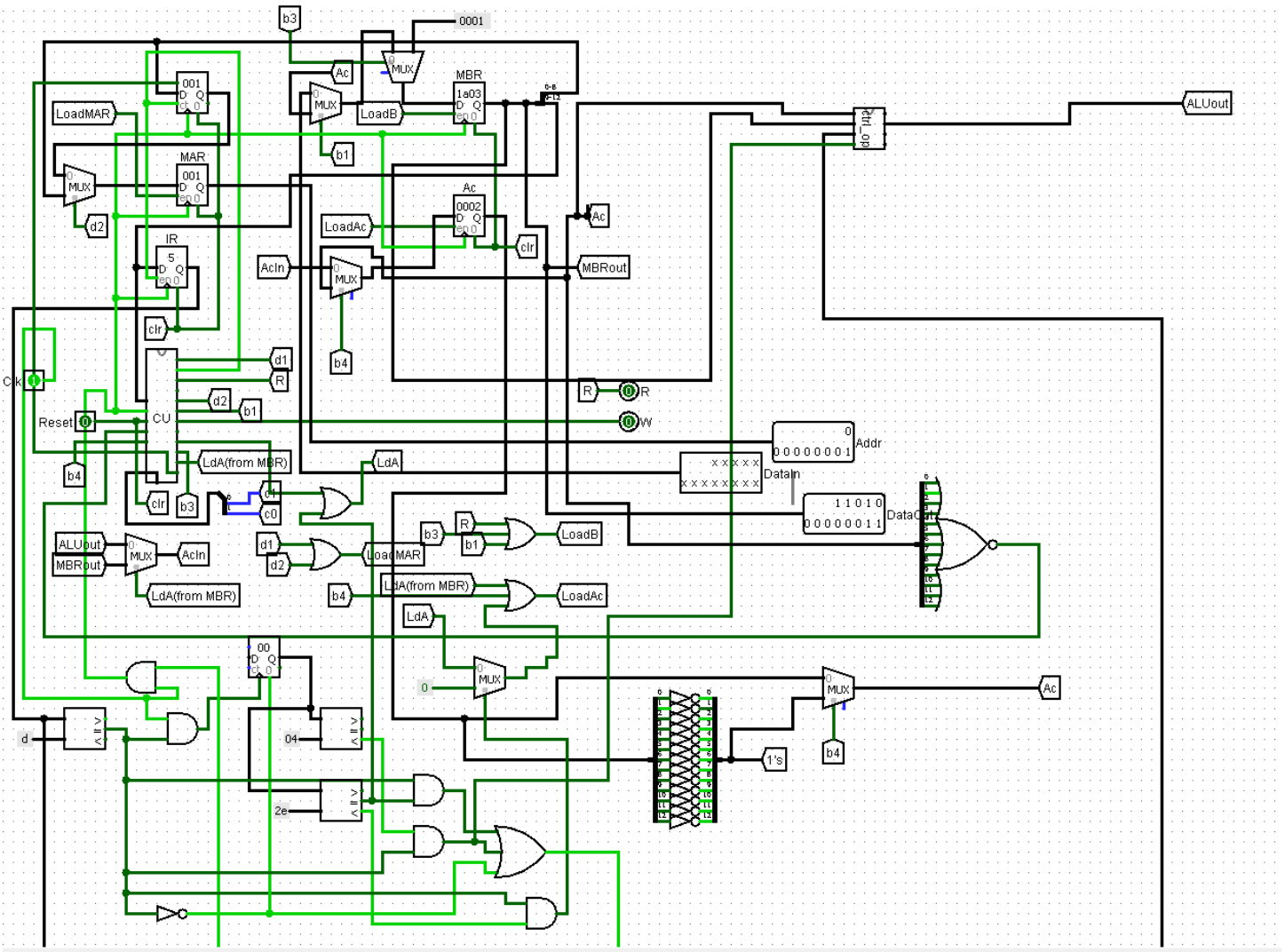

b3
0001
Ac
MUX
MBR
1a03
LoadB
LoadMAR
001
MAR
001
b1
ALUout
d2
Ac
0002
LoadAc
clr
IR
5
AcIn
MBRout
b4
Clk
d1
R
CU
Reset
d2
b1
R
W
Addr
0 0 0 0 0 0 0 1
DataIn
x x x x x
x x x x x x x x
LdA(from MBR)
LdA
b4
clr
b3
c1
c0
1 1 0 1 0
0 0 0 0 0 0 1 1
DataOut
ALUout
MBRout
AcIn
d1
d2
LoadMAR
b3
R
b1
LoadB
LdA(from MBR)
b4
LdA(from MBR)
LoadAc
LdA
00
0
MUX
Ac
d
04
1's
b4
2e

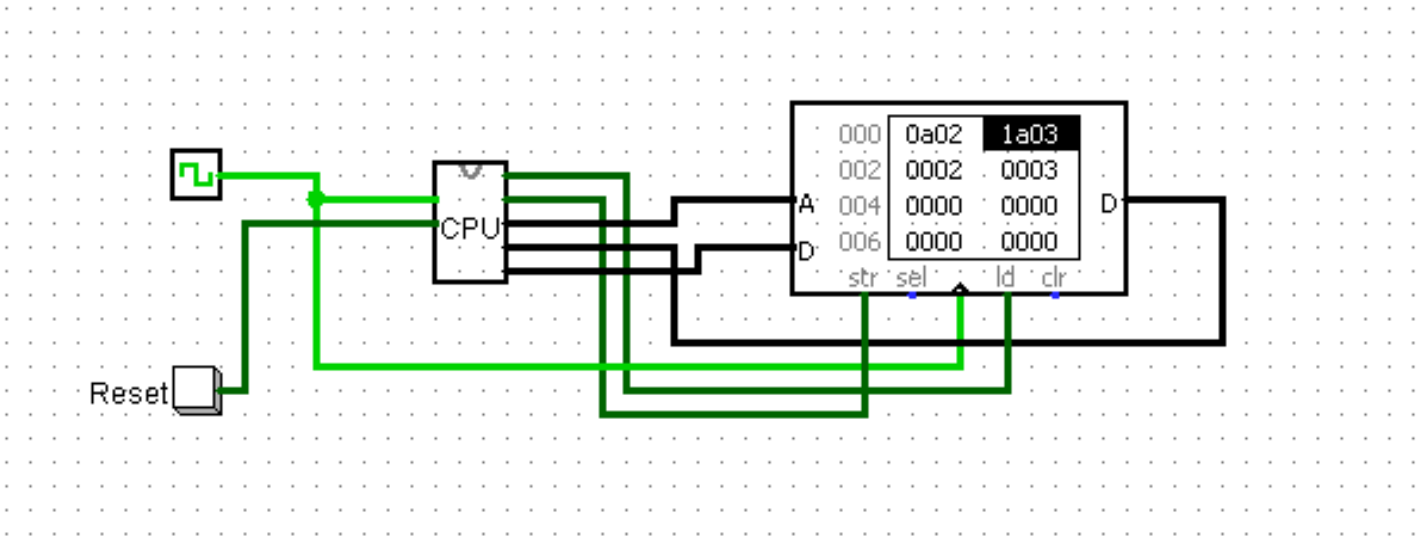

CPU
Reset
000
0a02
1a03
002
0002
0003
004
0000
0000
006
0000
0000
A
D
D
str
sel
ld
clr

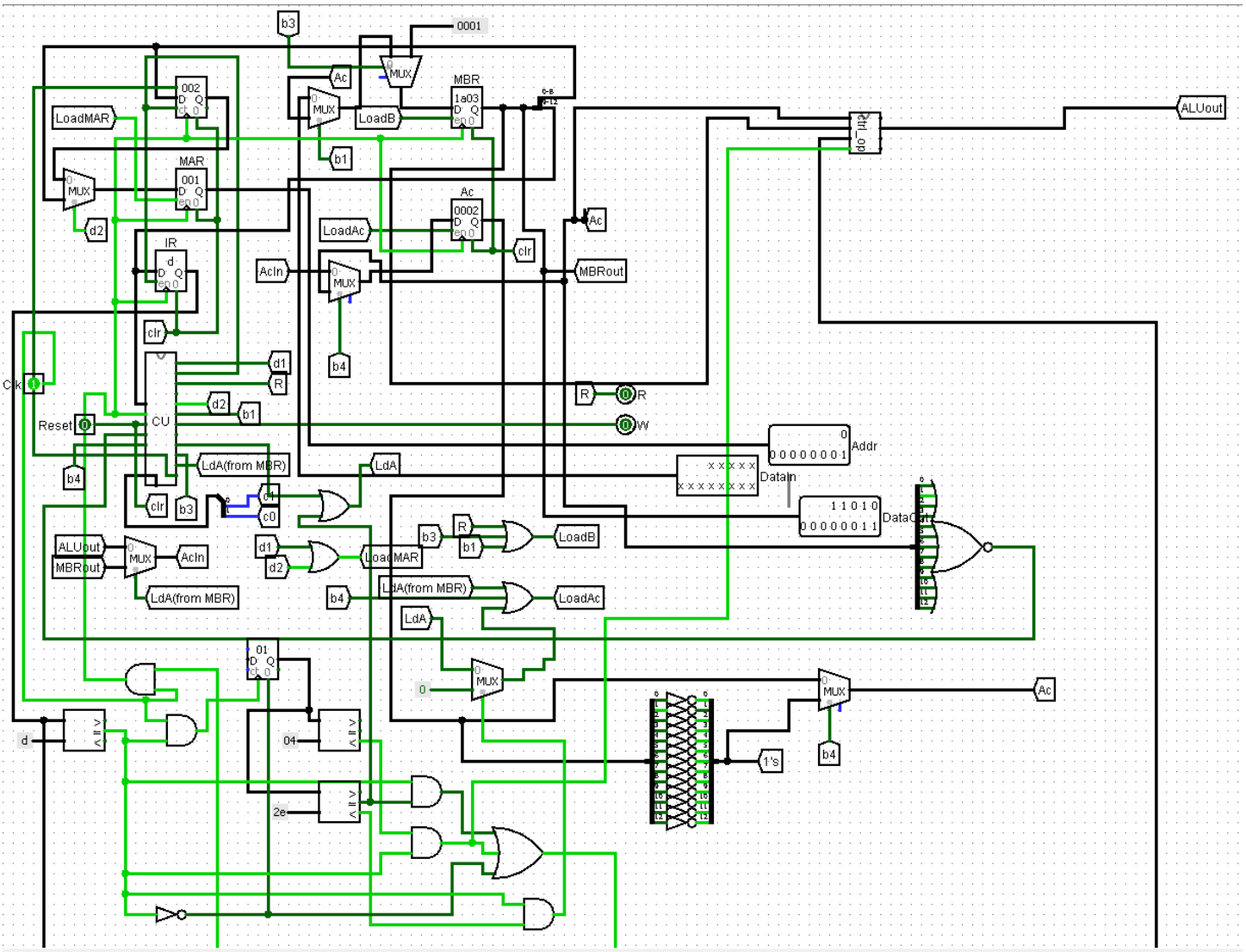

b3
0001
MUX
Ac
MBR
1a03
LoadB
LoadMAR
002
MAR
001
b1
d2
IR
d
LoadAc
0002
clr
AcIn
MBRout
ALUout
b4
Clk
Reset
CU
d1
R
W
Addr
DataIn
DataOut
LdA(from MBR)
LdA
c1
c0
b3
LoadMAR
LoadB
LoadAc
01
0
04
2e
1's

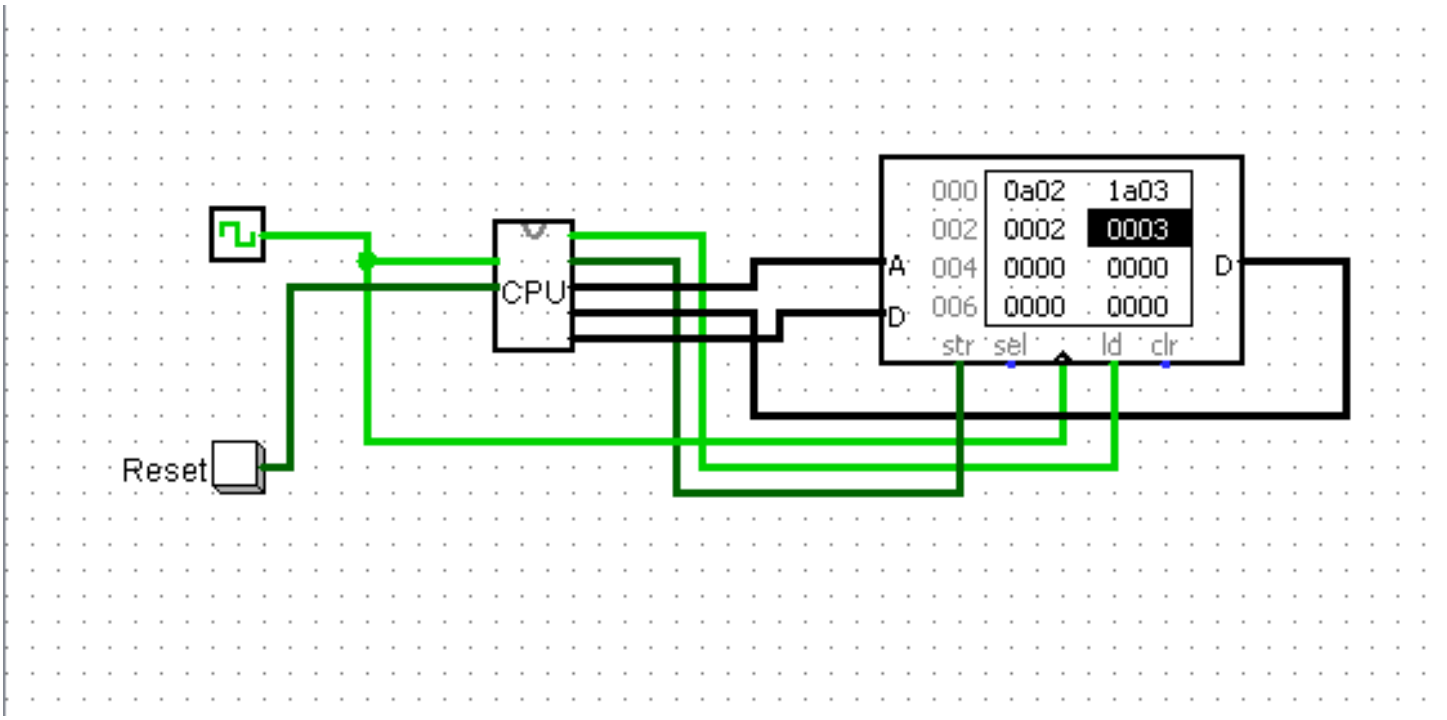

CPU
Reset
A
D
000 0a02 1a03
002 0002 0003
004 0000 0000
006 0000 0000
str sel ld clr

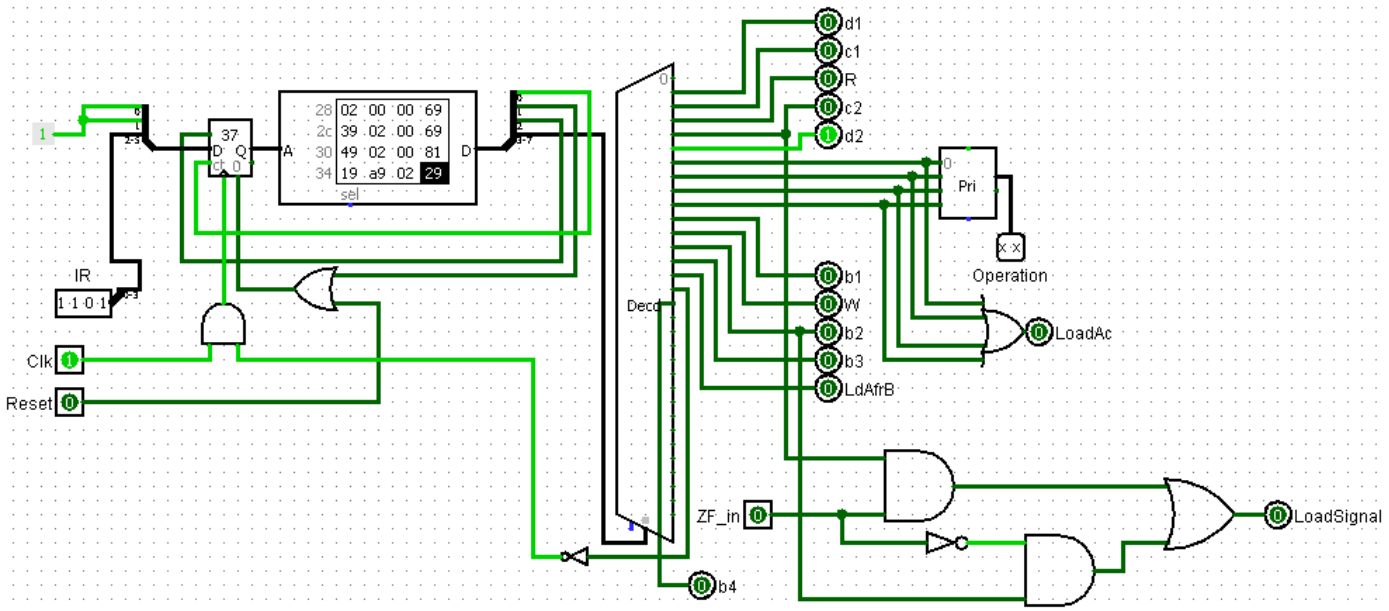
1
37
D Q
ck 0
A
D
28 02 00 00 69
2c 39 02 00 69
30 49 02 00 81
34 19 a9 02 29
sel
IR
1 1 0 1
Clk
Reset
Deco
d1
c1
R
c2
d2
Pri
Operation
b1
W
b2
b3
LdAfrB
LoadAc
ZF_in
b4
LoadSignal

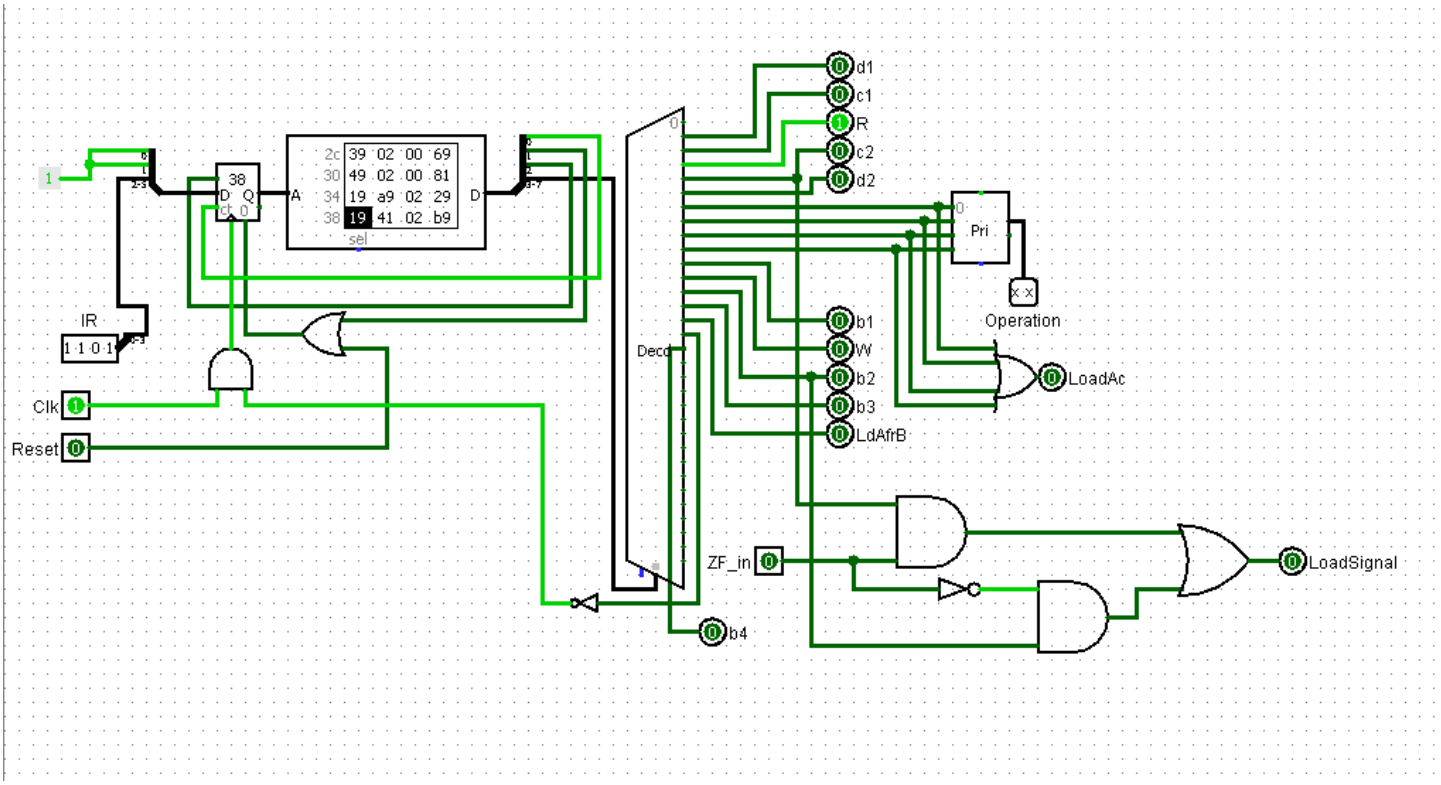
1
38
D Q
ck 0
A
D
2c 39 02 00 69
30 49 02 00 81
34 19 a9 02 29
38 19 41 02 b9
sel
IR
1 1 0 1
Clk
Reset
Deco
d1
c1
R
c2
d2
Pri
Operation
b1
W
b2
b3
LdAfrB
LoadAc
ZF_in
b4
LoadSignal

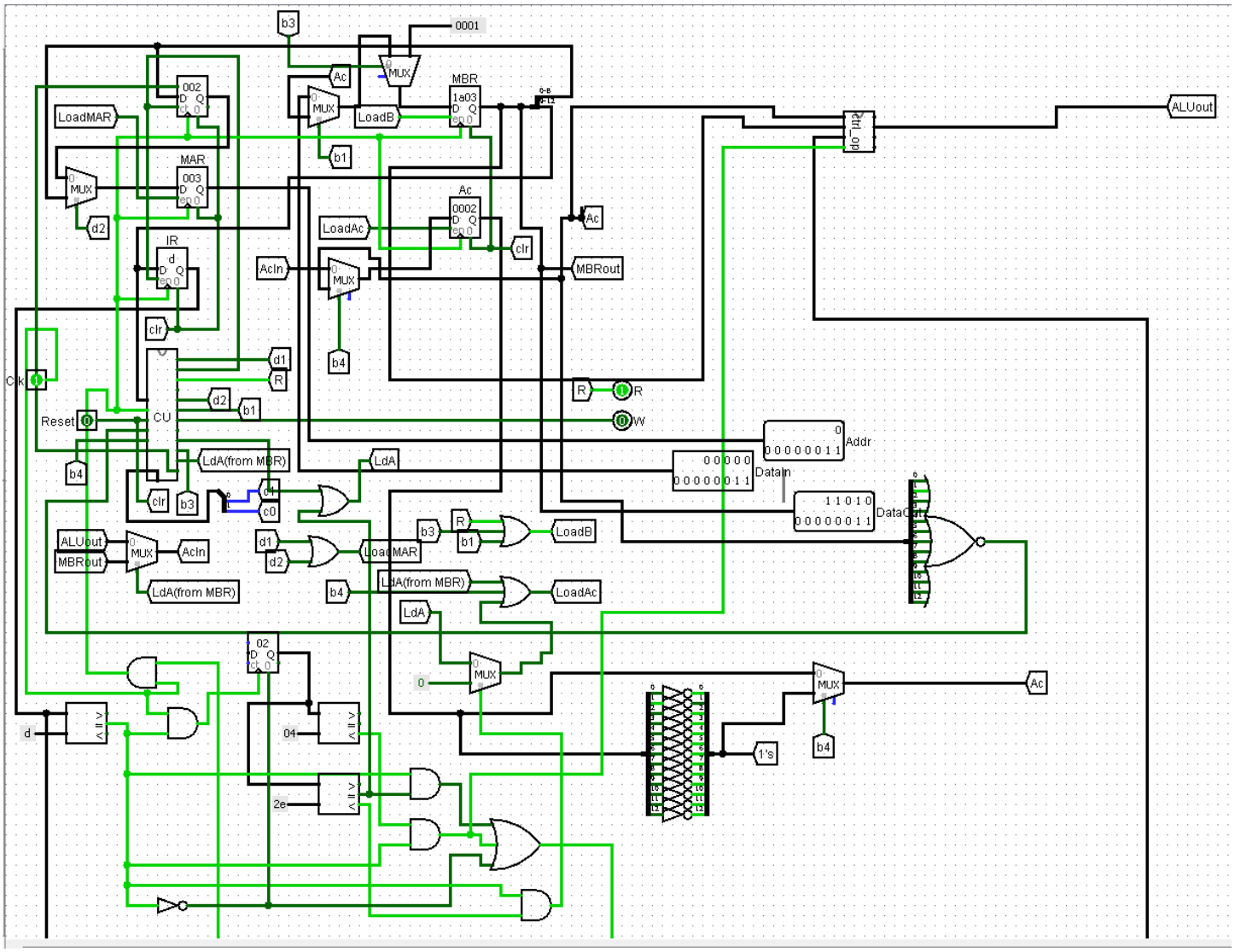

b3
0001
Ac
MUX
MBR
1a03
LoadB
LoadMAR
002
MAR
003
b1
d2
IR
d
Ac
0002
LoadAc
clr
AcIn
MBRout
ALUout
b4
Clk
Reset
CU
d1
R
d2
b1
LdA(from MBR)
LdA
b4
clr
b3
c1
c0
ALUout
MBRout
AcIn
LdA(from MBR)
d1
d2
LoadMAR
b3
R
b1
LoadB
b4
LdA(from MBR)
LoadAc
LdA
R
W
Addr
DataIn
DataOut
02
0
MUX
Ac
d
04
2e
1's
b4

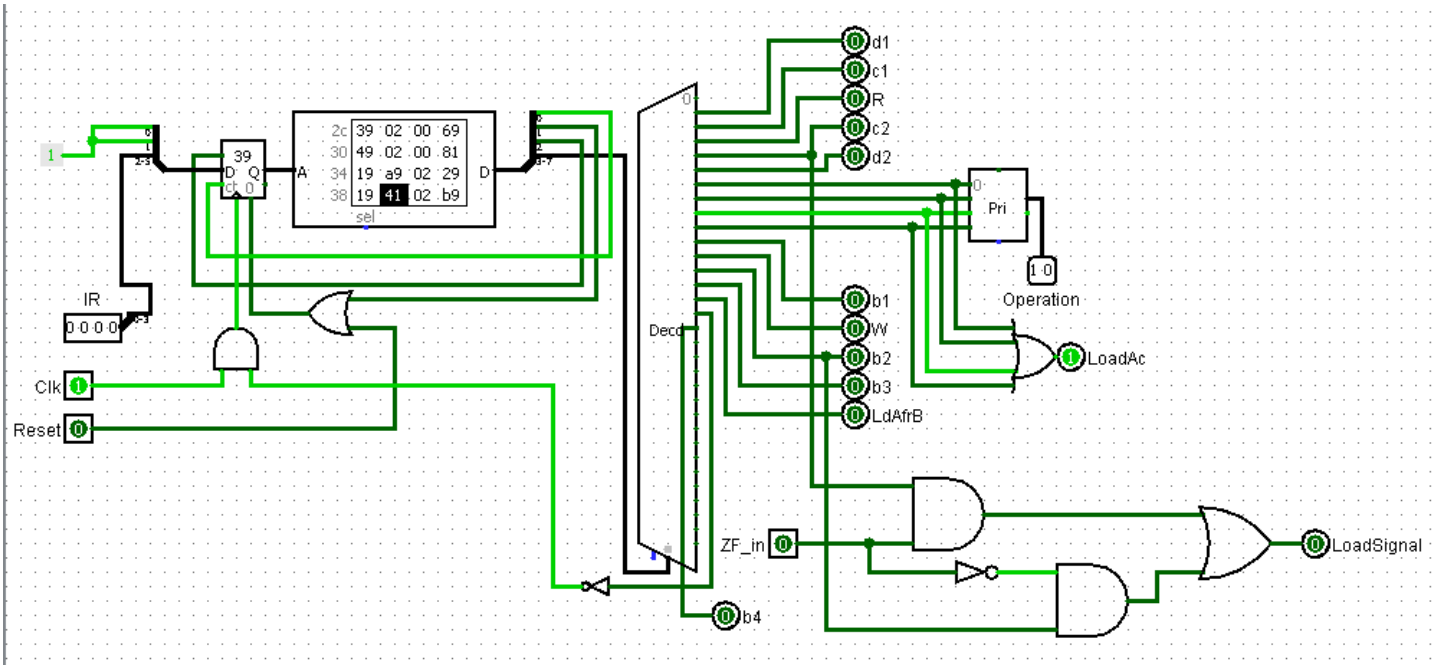

1
39
2c 39 02 00 69
30 49 02 00 81
34 19 a9 02 29
38 19 41 02 b9
sel
IR
Clk
Reset
Decd
d1
c1
R
c2
d2
Pri
Operation
b1
W
b2
b3
LdAfrB
LoadAc
ZF_in
b4
LoadSignal

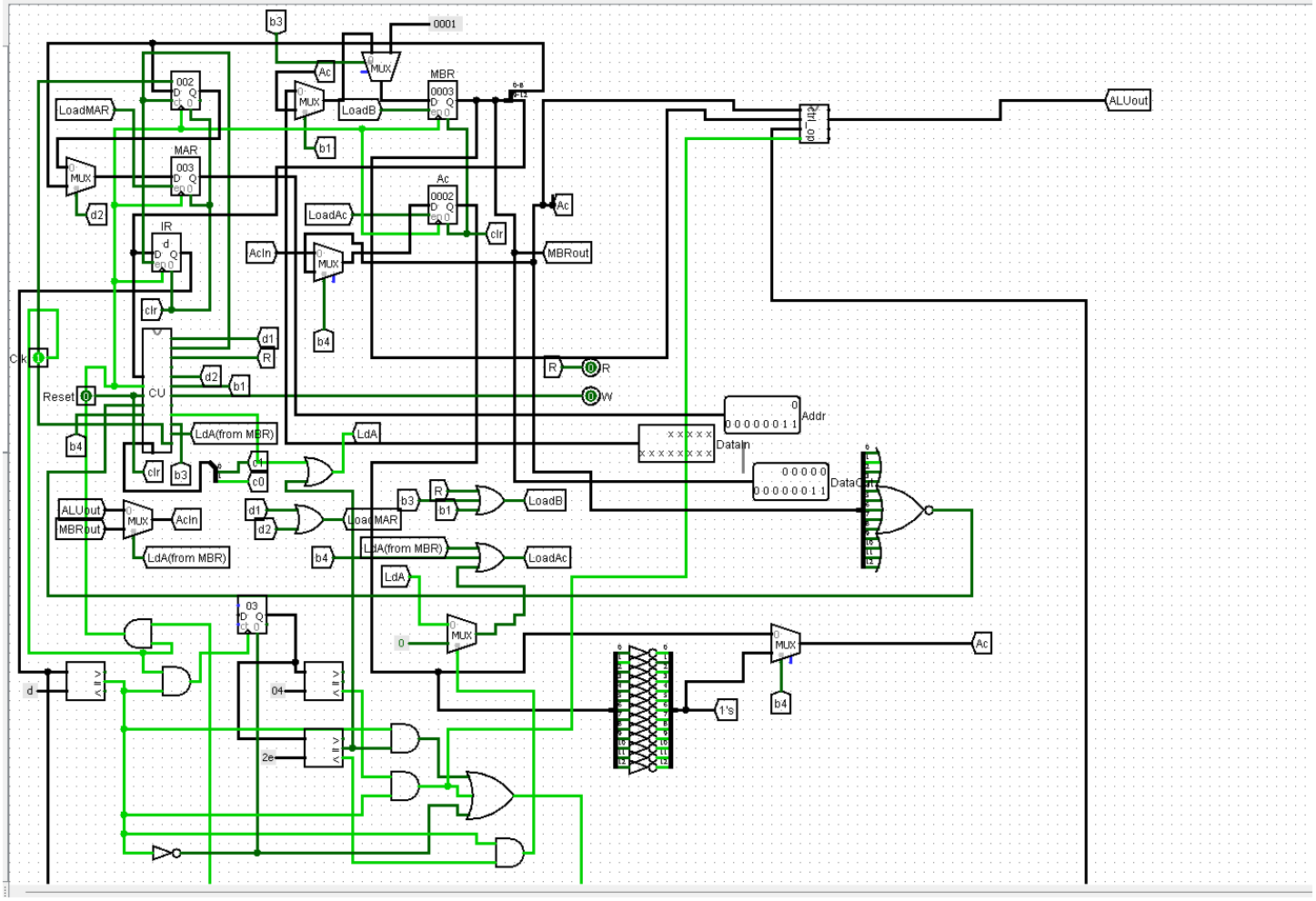

b3
0001
Ac
MUX
MBR
0003
LoadB
b1
002
LoadMAR
MAR
003
d2
IR
d
Ac
0002
LoadAc
clr
AcIn
MBRout
b4
ALUout
Ctrl_op
d1
R
Clk
CU
Reset
LdA(from MBR)
LdA
c1
c0
Addr
DataIn
DataOut
ALUout
MBRout
AcIn
LdA(from MBR)
LoadMAR
LoadB
LoadAc
LdA
03
0
04
2e
d
1's

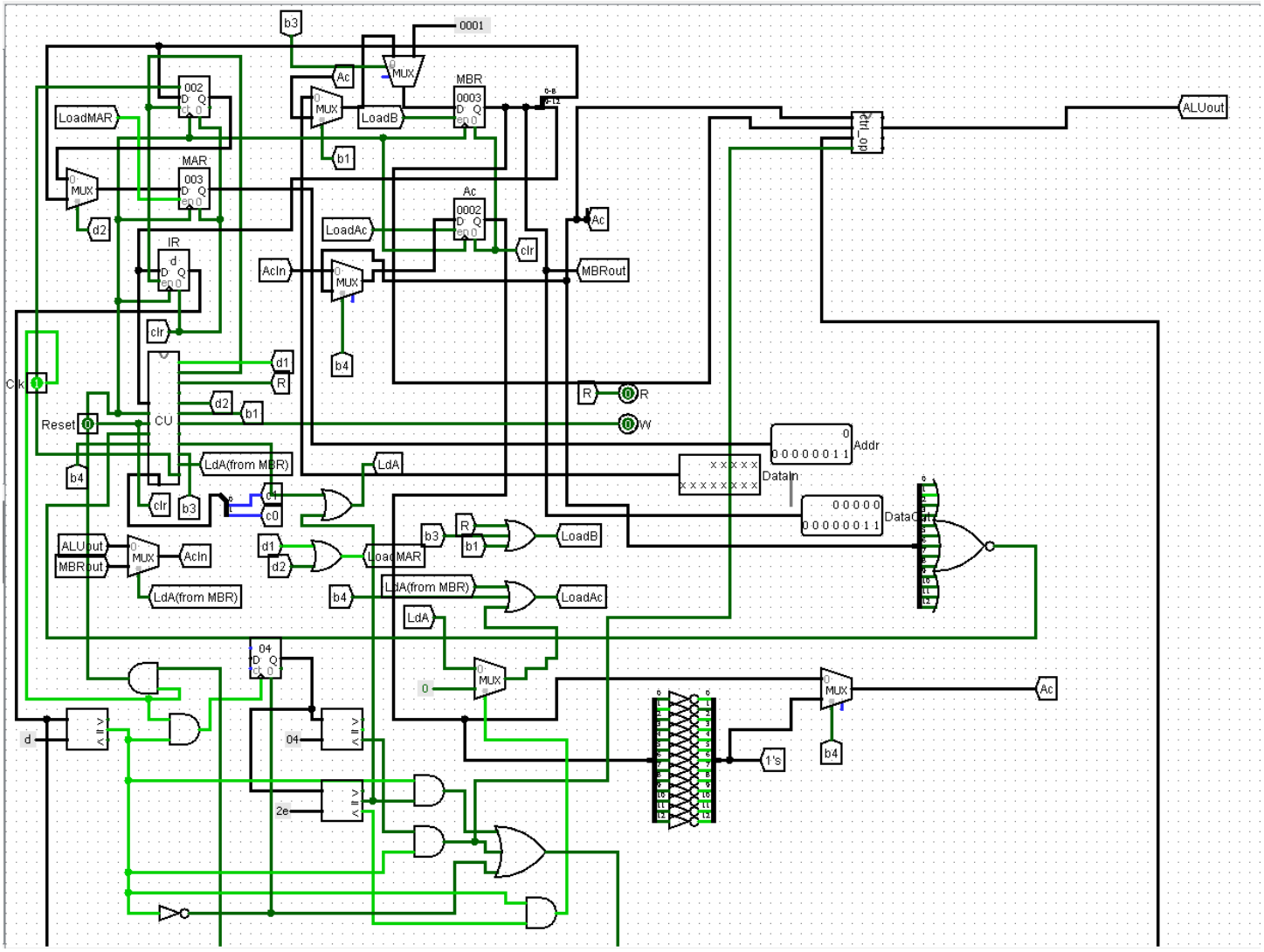

b3
0001
MUX
Ac
MBR
0003
LoadB
LoadMAR
002
MAR
003
b1
d2
IR
LoadAc
0002
clr
AcIn
MBRout
ALUout
Ctrl_op
b4
Clk
CU
d1
R
Reset
LdA(from MBR)
LdA
Addr
DataIn
DataOut
c0
c1
ALUout
MBRout
AcIn
LoadMAR
LoadB
LdA(from MBR)
LoadAc
LdA
04
2e
1's

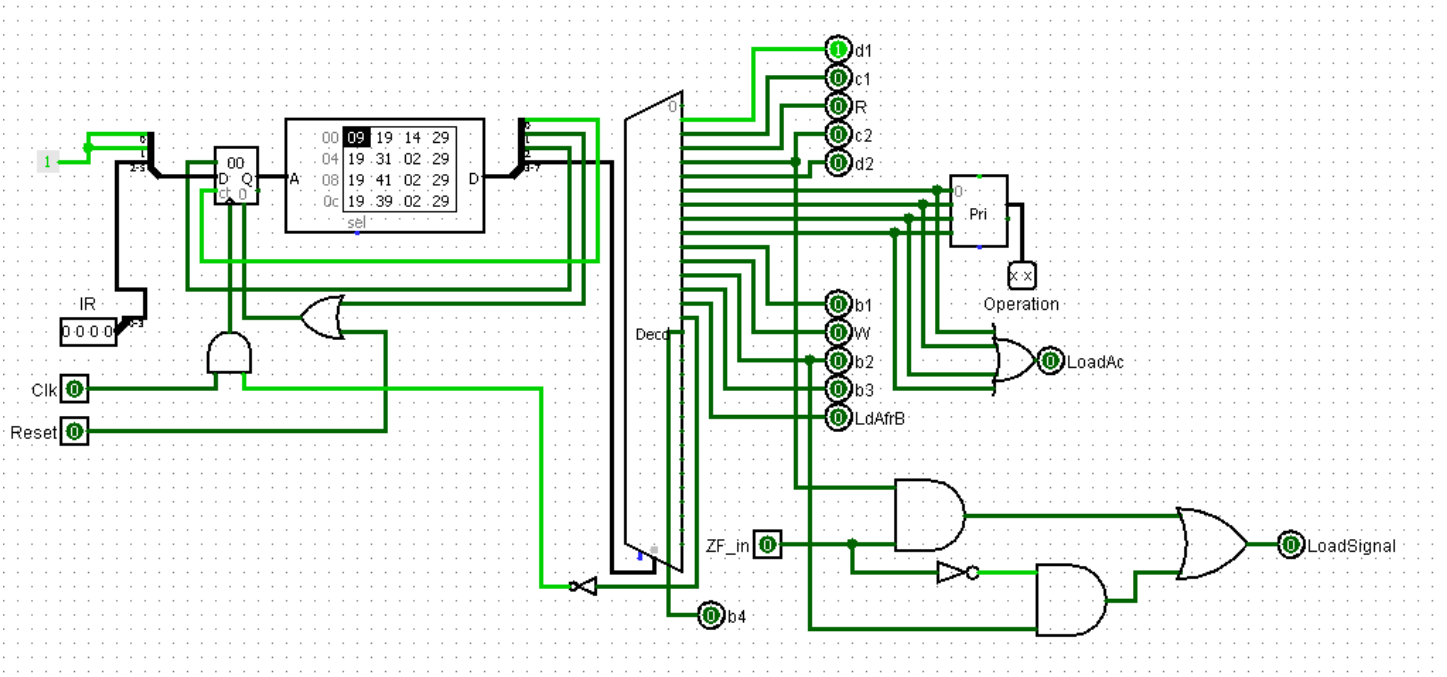

d1
c1
R
c2
d2
00
09 19 14 29
04 19 31 02 29
08 19 41 02 29
0c 19 39 02 29
sel
A
D
Pri
Operation
IR
Clk
Reset
Decd
b1
W
b2
b3
LdAfrB
LoadAc
ZF_in
LoadSignal
b4

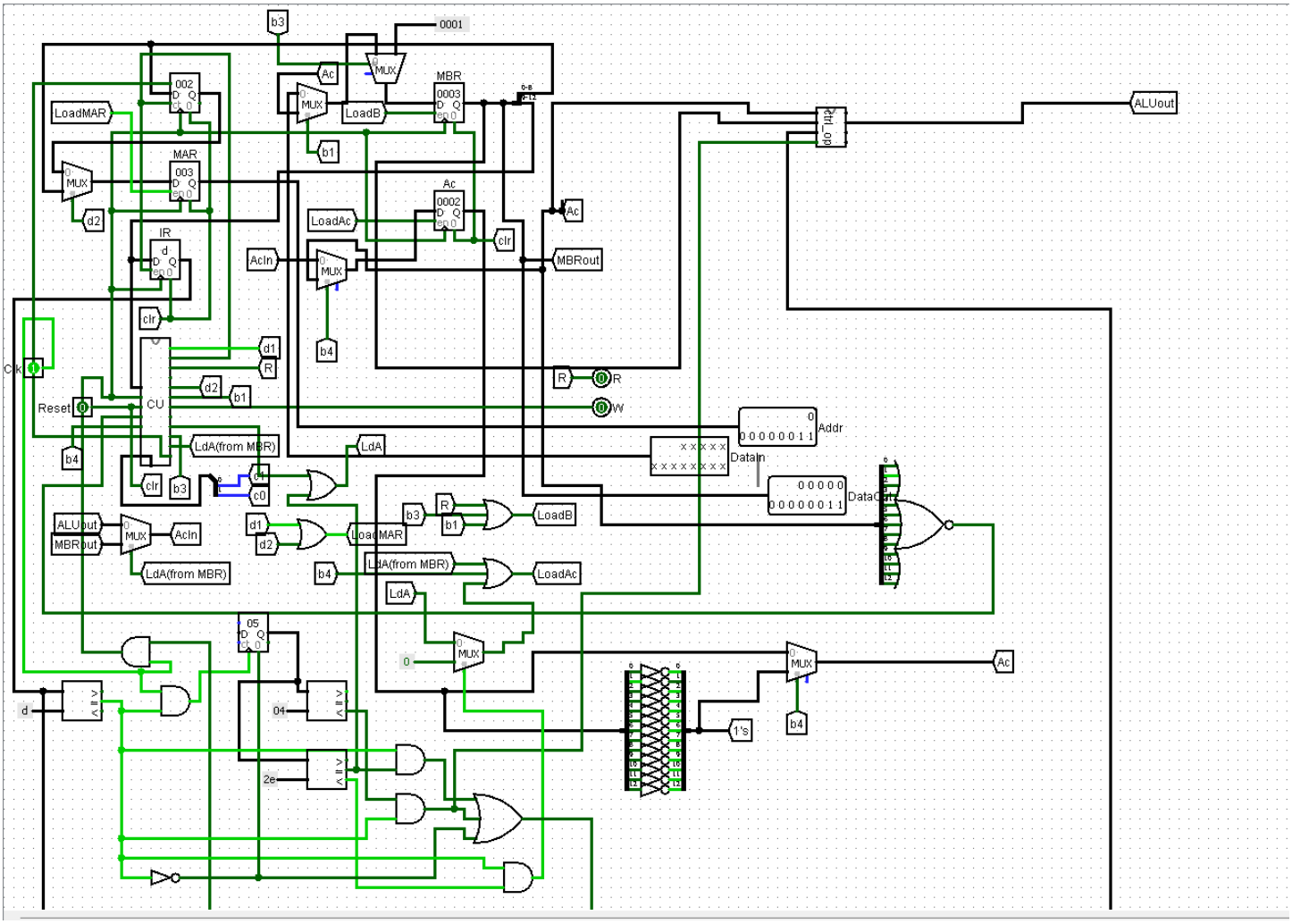

b3
0001
MUX
Ac
MBR
0003
LoadB
LoadMAR
002
MAR
003
b1
ALUout
ctrl_op
Ac
0002
LoadAc
clr
MBRout
IR
AcIn
d2
b4
d1
R
Clk
CU
Reset
W
Addr
DataIn
LdA(from MBR)
LdA
c0
DataOut
ALUout
MBRout
AcIn
LoadMAR
LoadB
LdA(from MBR)
LoadAc
LdA
05
04
2e
1's
d

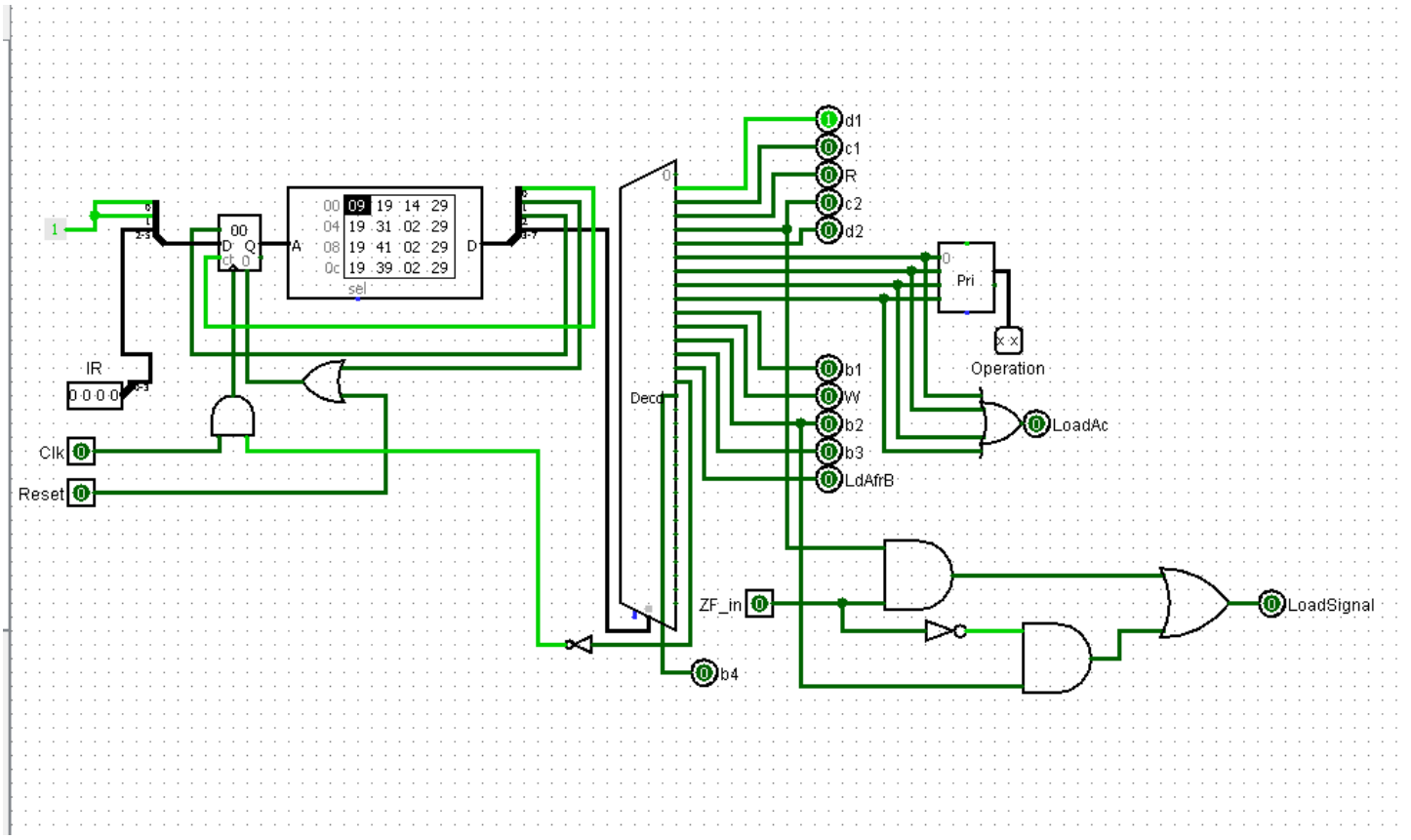

d1
c1
R
c2
d2
00
09 19 14 29
04 19 31 02 29
08 19 41 02 29
0c 19 39 02 29
sel
Pri
Operation
IR
Decd
b1
W
b2
b3
LdAfrB
LoadAc
Clk
Reset
ZF_in
LoadSignal
b4

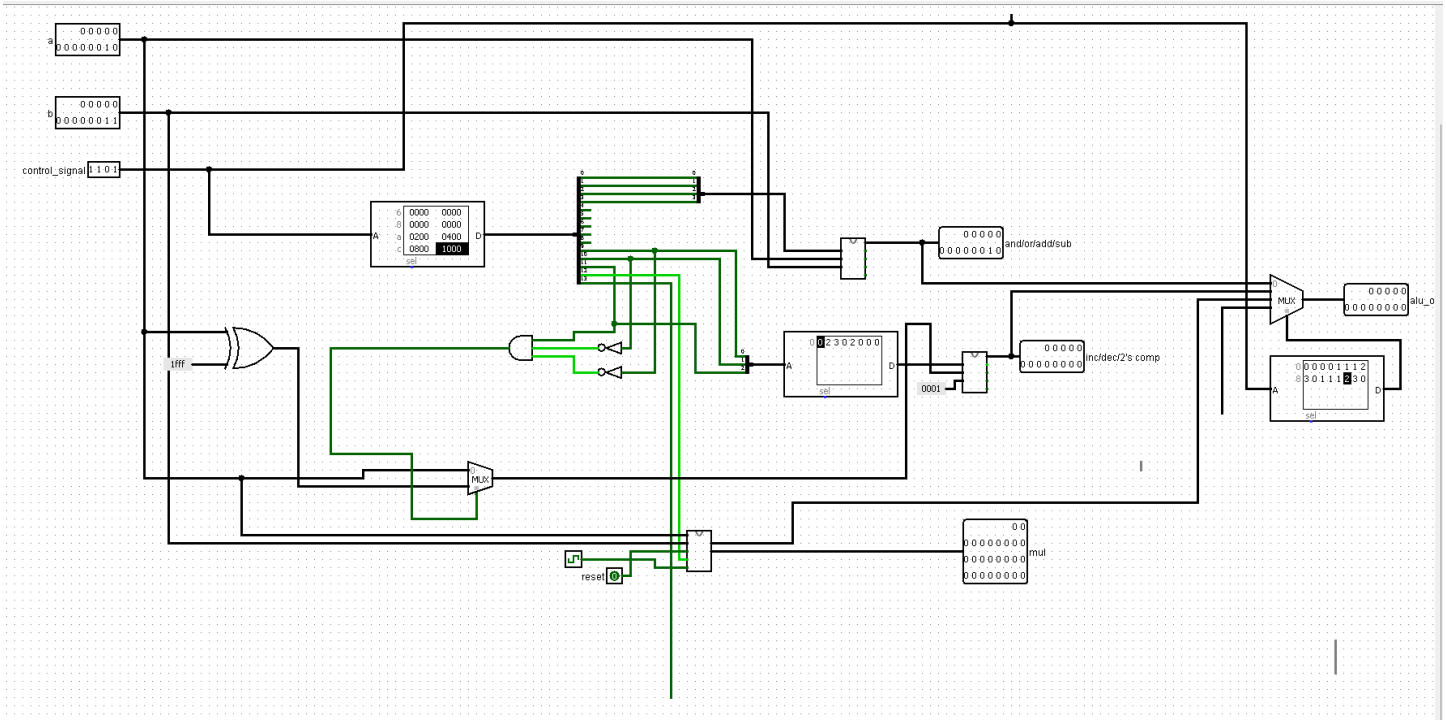
a
b
control_signal
1101
1fff
MUX
and/or/add/sub
inc/dec/2's comp
0001
alu_o
mul
reset

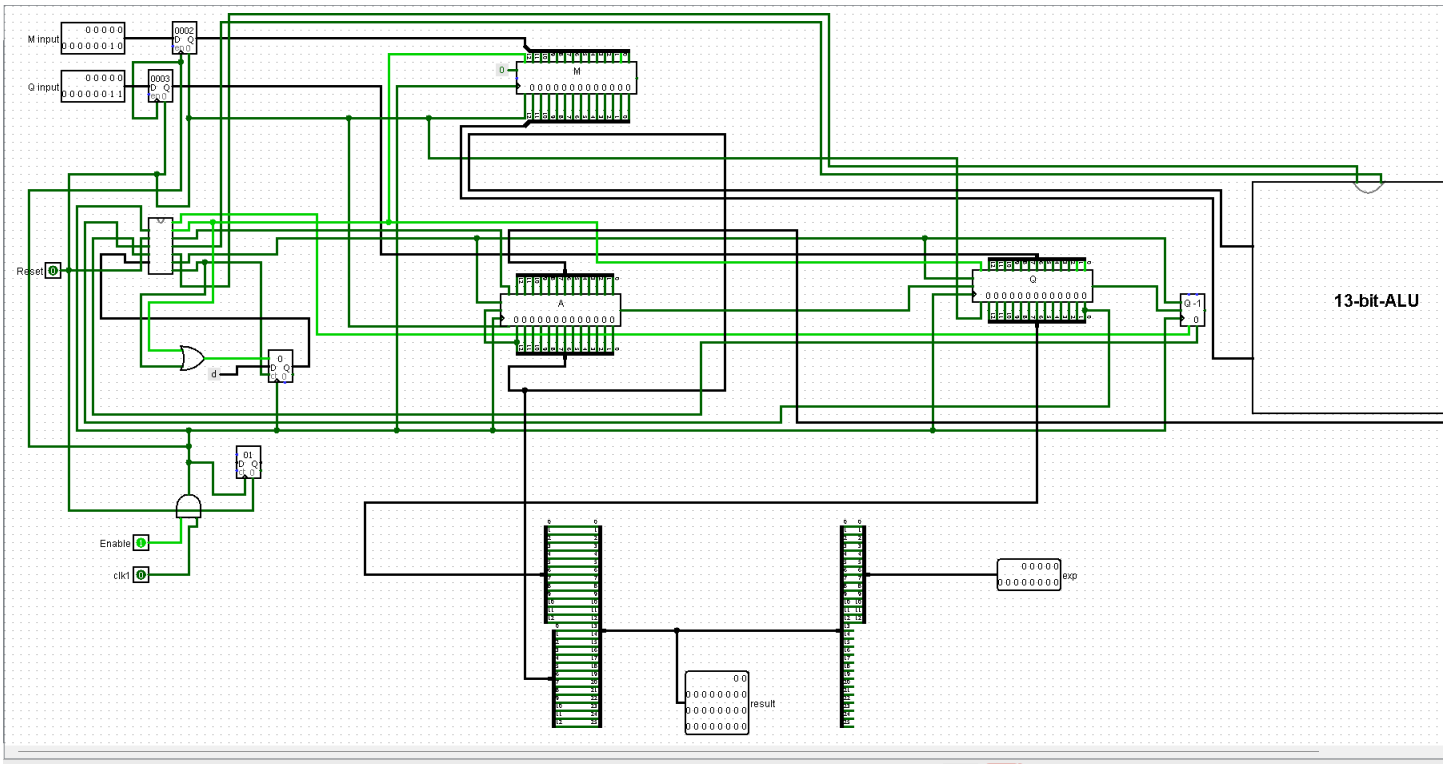
M input
Q input
Reset
M
A
Q
Q-1
13-bit-ALU
Enable
clk1
exp
result

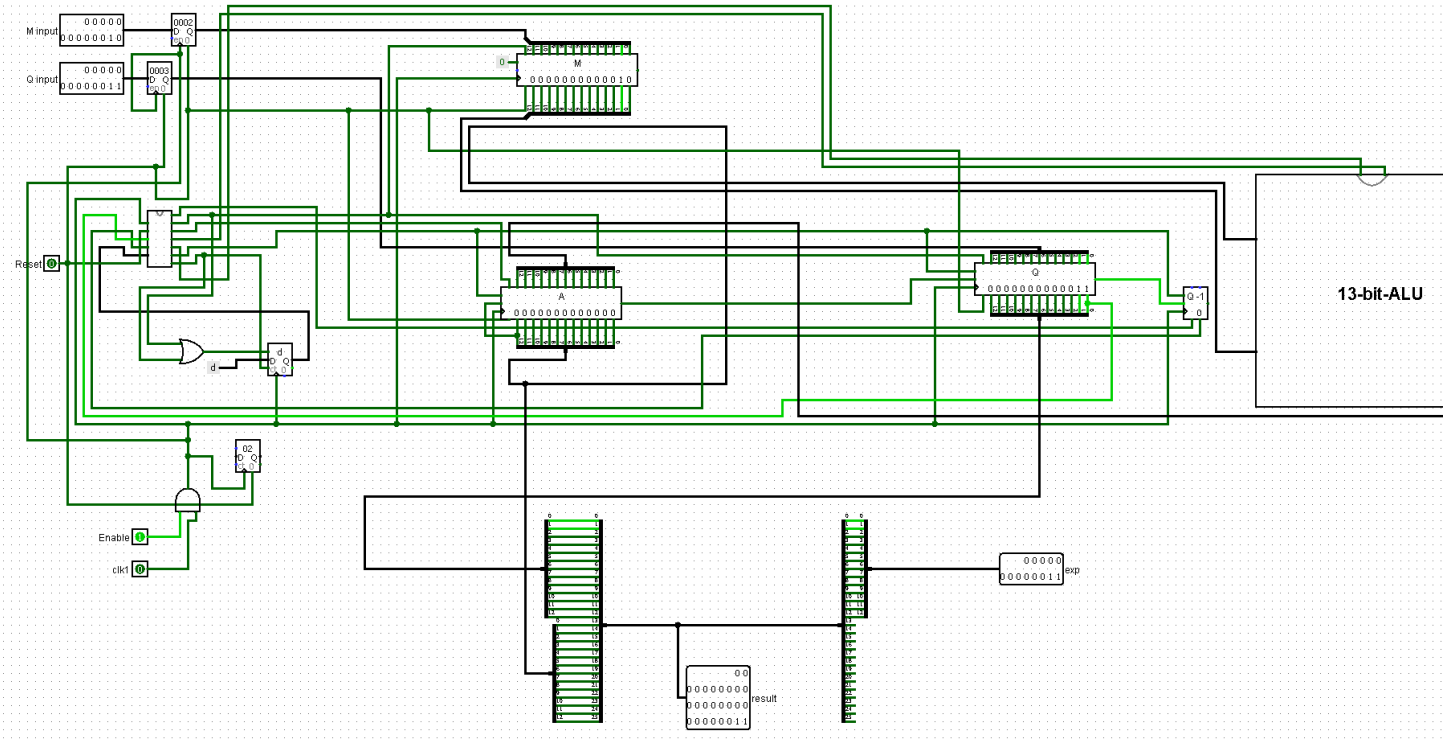
M input
Q input
Reset
Enable
clk1
M
A
Q
Q-1
d
exp
result
13-bit-ALU

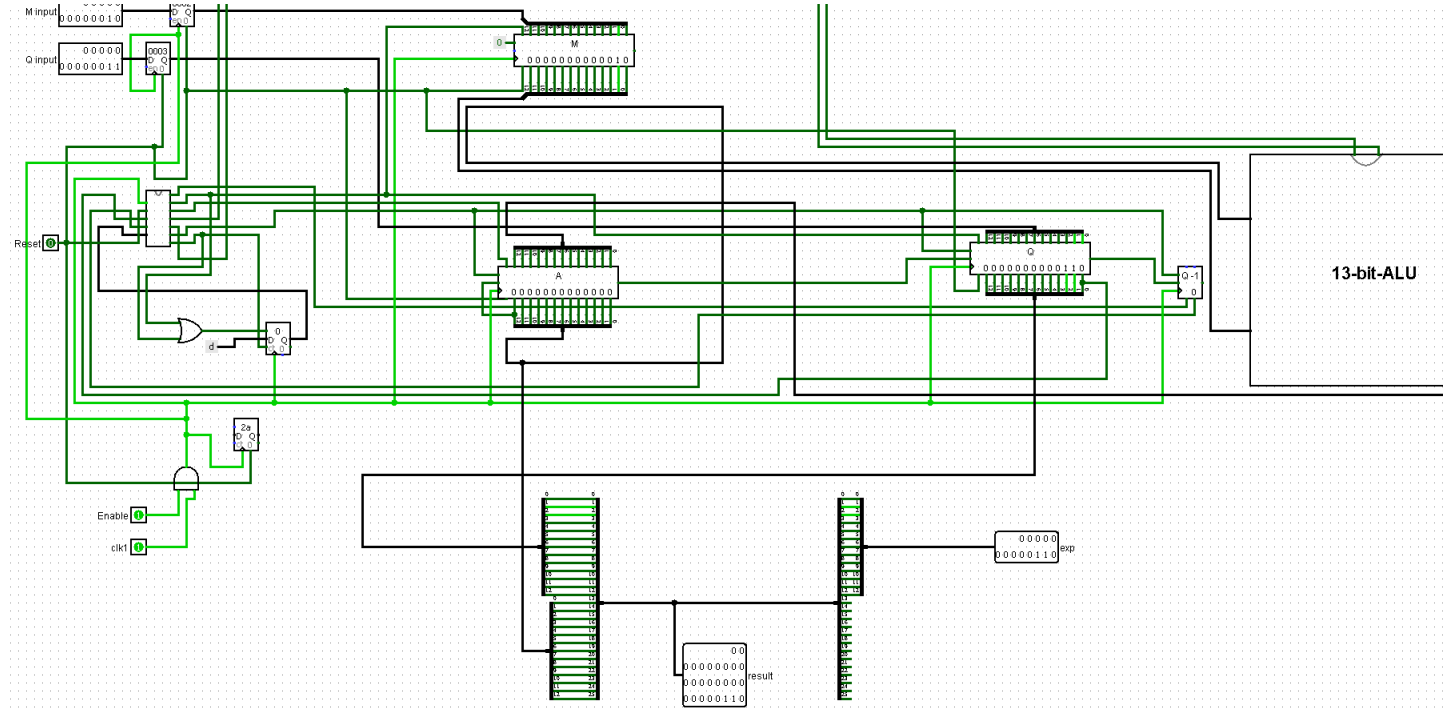
M input
Q input
Reset
Enable
clk1
M
A
Q
Q-1
d
exp
result
13-bit-ALU

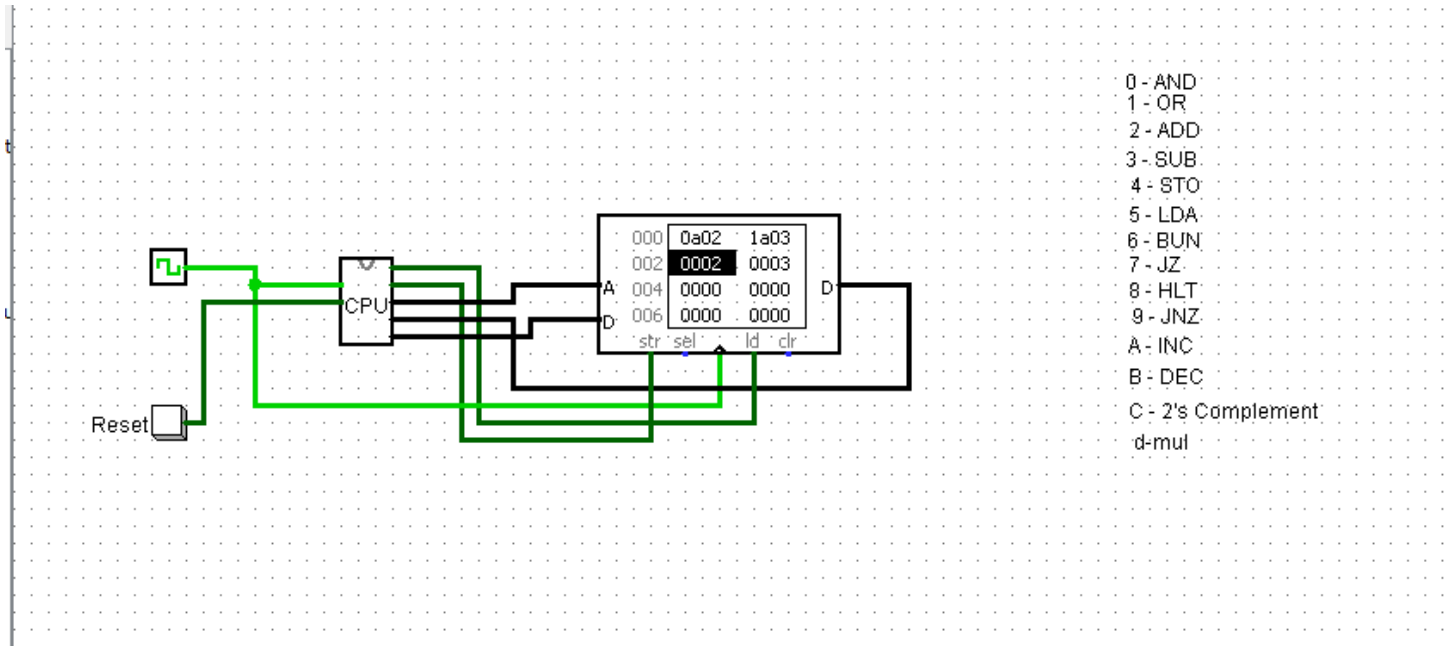

0 - AND
1 - OR
2 - ADD
3 - SUB
4 - STO
5 - LDA
6 - BUN
7 - JZ
8 - HLT
9 - JNZ
A - INC
B - DEC
C - 2's Complement
d-mul
CPU
Reset
000 0a02 1a03
002 0002 0003
004 0000 0000
006 0000 0000
str sel ld clr

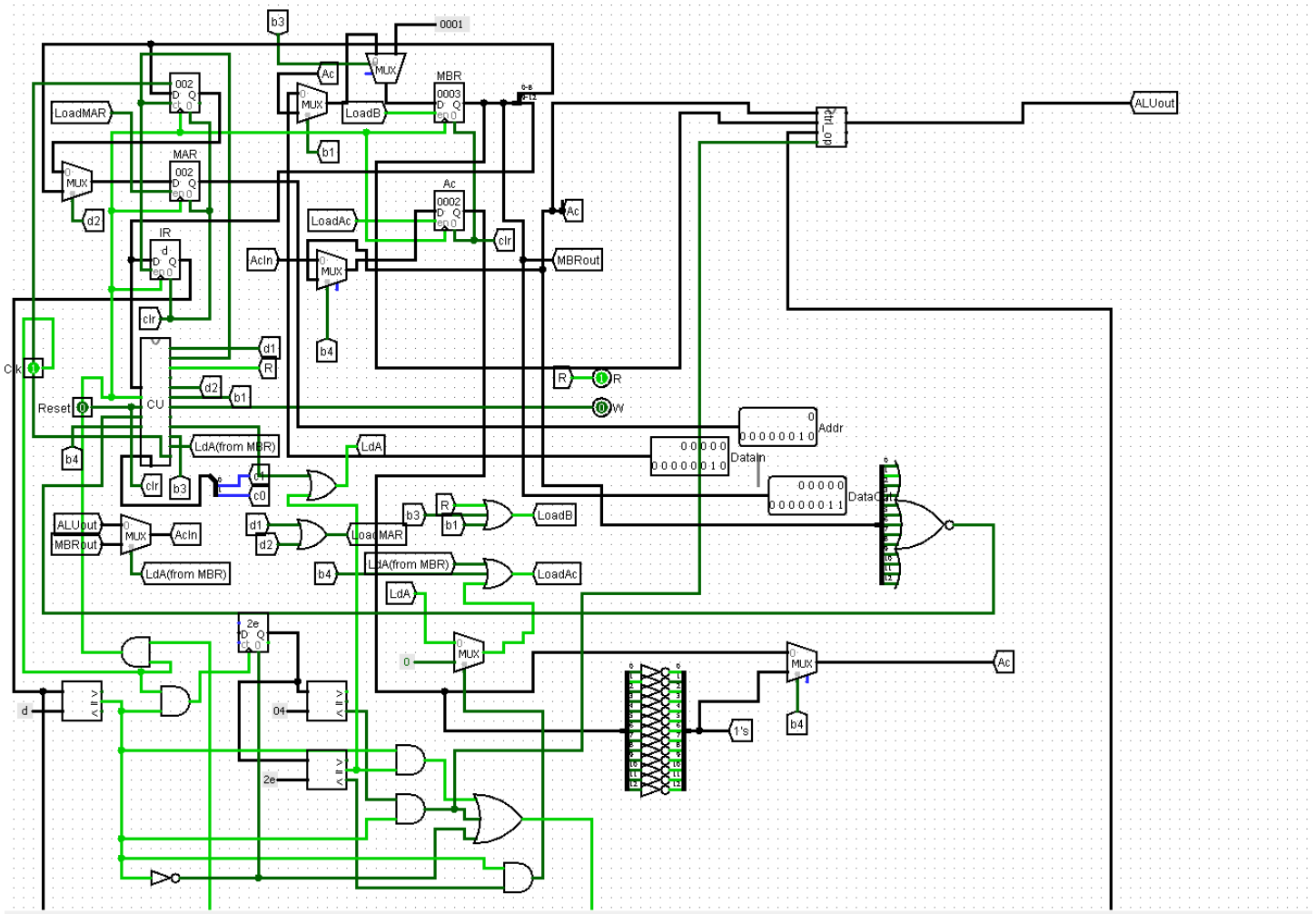

0001
LoadMAR
MAR
IR
MBR
Ac
LoadB
LoadAc
AcIn
MBRout
ALUout
CU
Clk
Reset
LdA(from MBR)
LdA
LoadMAR
Addr
DataIn
DataOut
1's

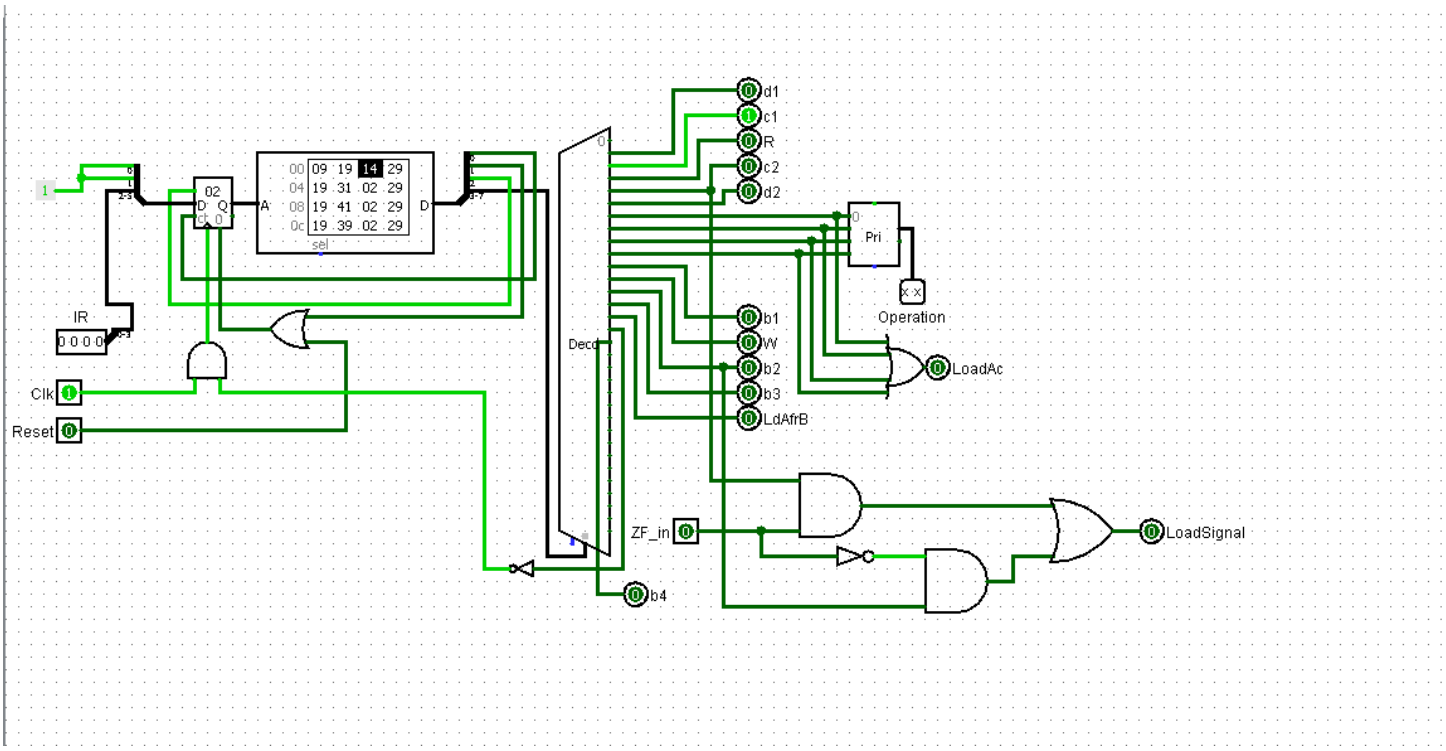

d1
c1
R
c2
d2
Pri
Operation
LoadAc
b1
W
b2
b3
LdAfrB
Decd
IR
Clk
Reset
ZF_in
LoadSignal
b4

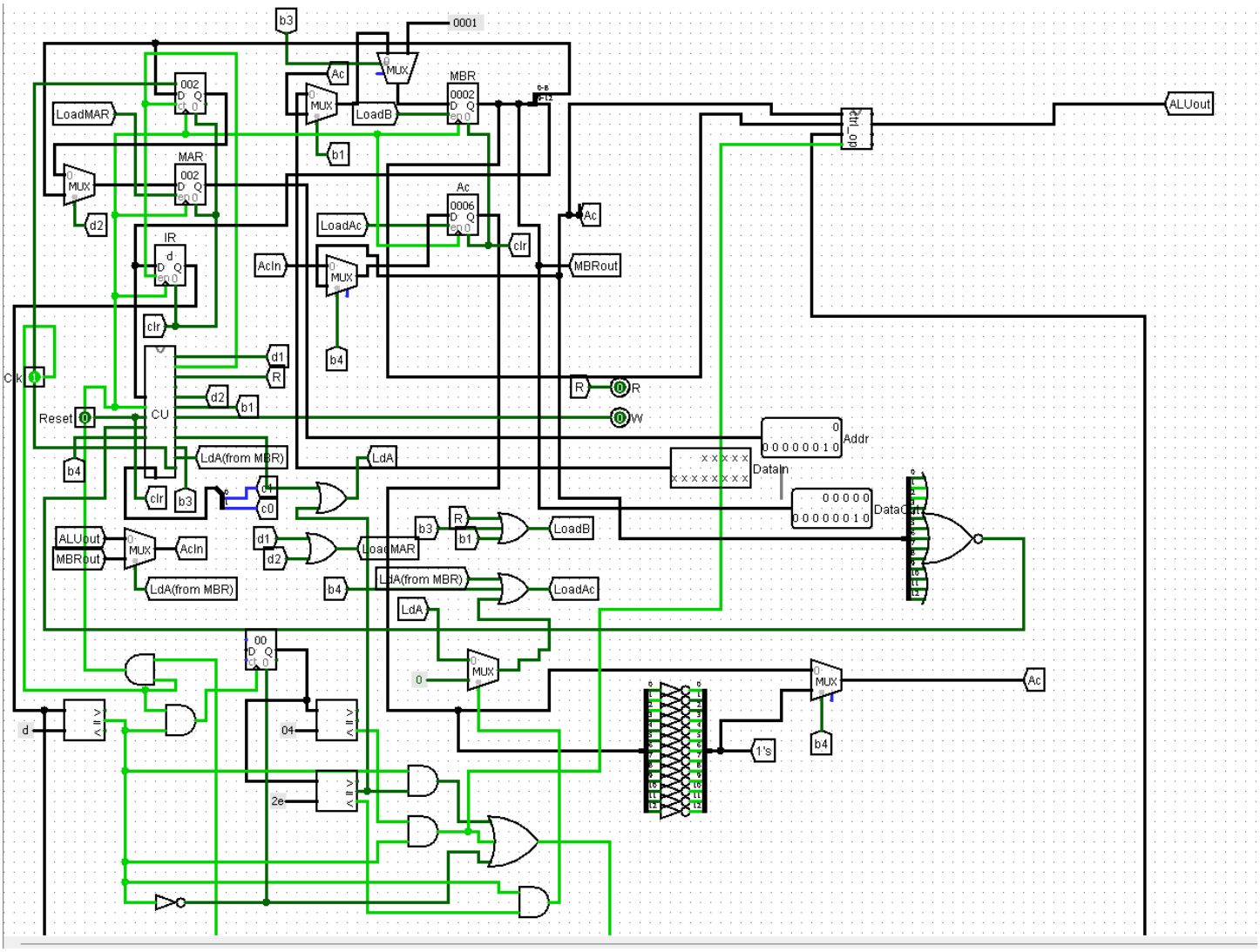

b3
0001
Ac
MUX
MBR
LoadB
LoadMAR
MAR
b1
d2
Ac
LoadAc
clr
AcIn
MBRout
IR
b4
d1
R
CU
Reset
LdA(from MBR)
LdA
Addr
DataIn
DataOut
ALUout
MBRout
AcIn
LoadMAR
LoadB
LdA(from MBR)
LoadAc
LdA
1's
Ac
b4
d
04
2e