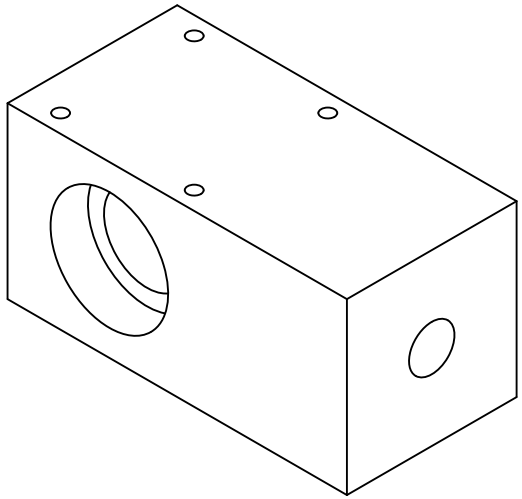

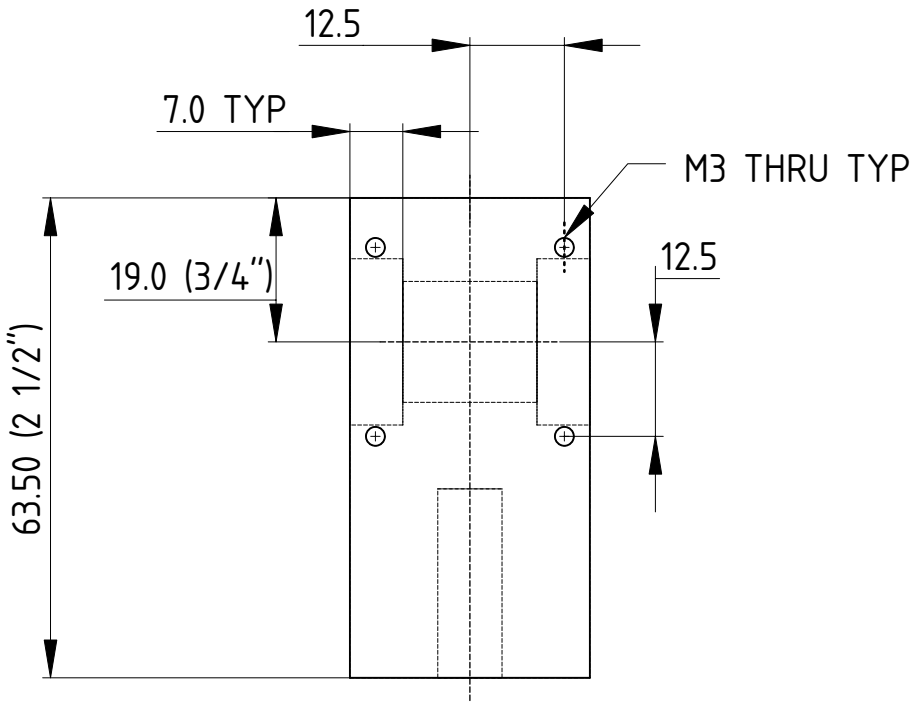

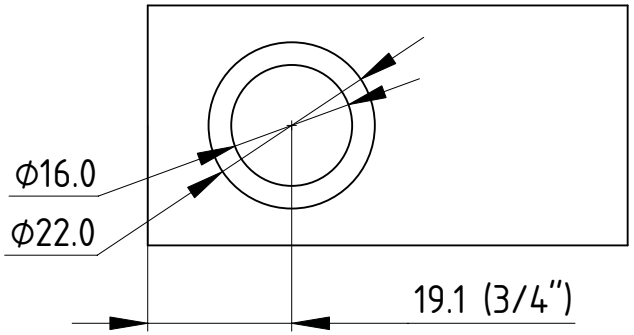

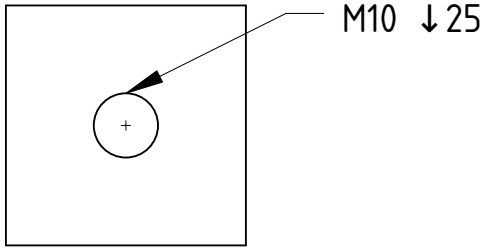

ALL UNIT IN mm UNLESS SPECIFIED

DESIGNED BY: RIO LIU DATE: 2022-12-13		LOWER BEARING BLOCK	
SIZE A4			
SCALE 1:1	WEIGHT (kg)	DRAWING NUMBER	SHEET 1

This drawing is our property; it can't be reproduced or communicated without our written consent.