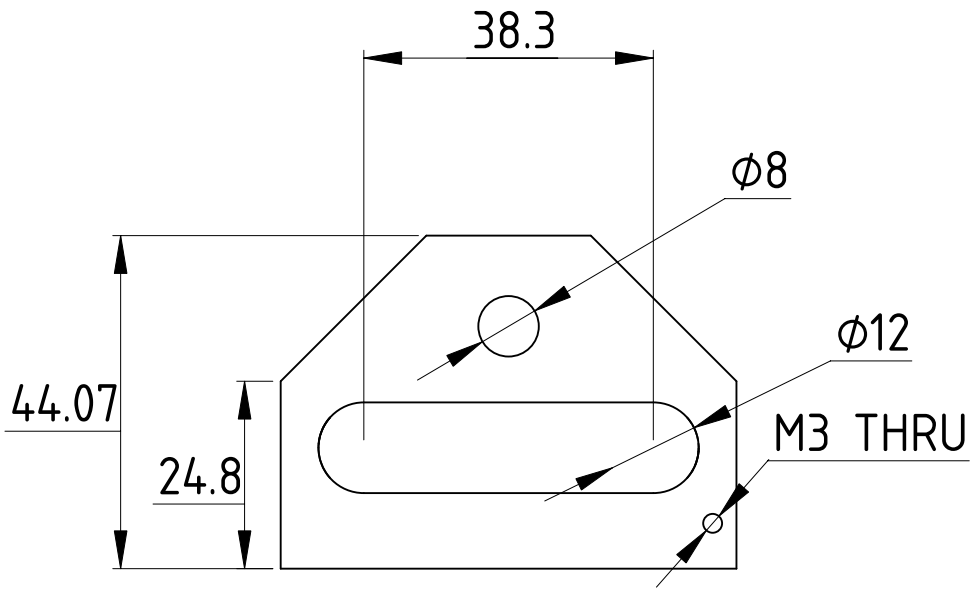

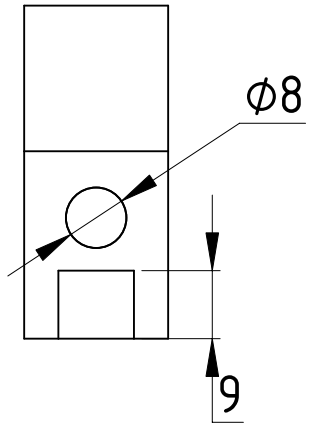

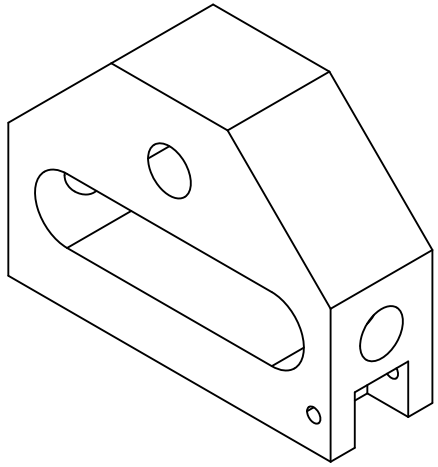

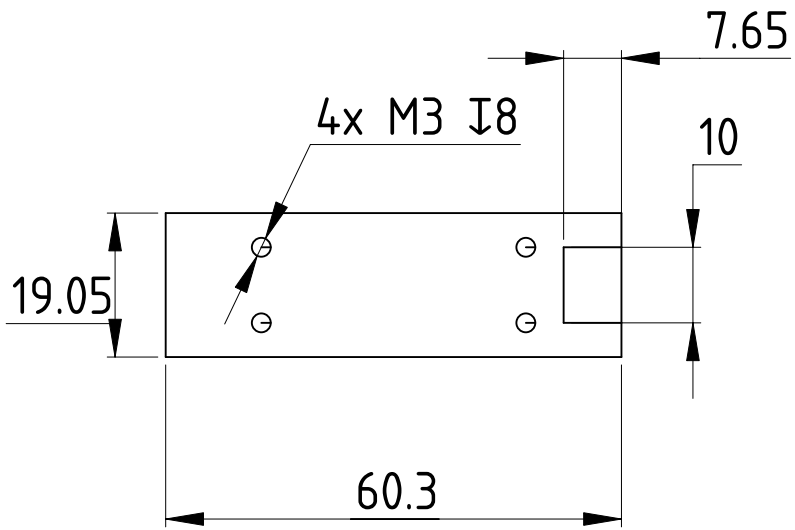

DESIGNED BY: Rio DATE: 2024-05-02		Altitude Block	
SIZE A4			
SCALE	WEIGHT (kg)	DRAWING NUMBER	SHEET 1

This drawing is our property; it can't be reproduced or communicated without our written consent.