Slippers To Satellite (S2S): Antenna Radiation Pattern

Kathmandu, Nepal.

Introduction

Uplink Frequency: 435.313 MHz
Downlink Frequency: 437.375 MHz

Dipole Antenna

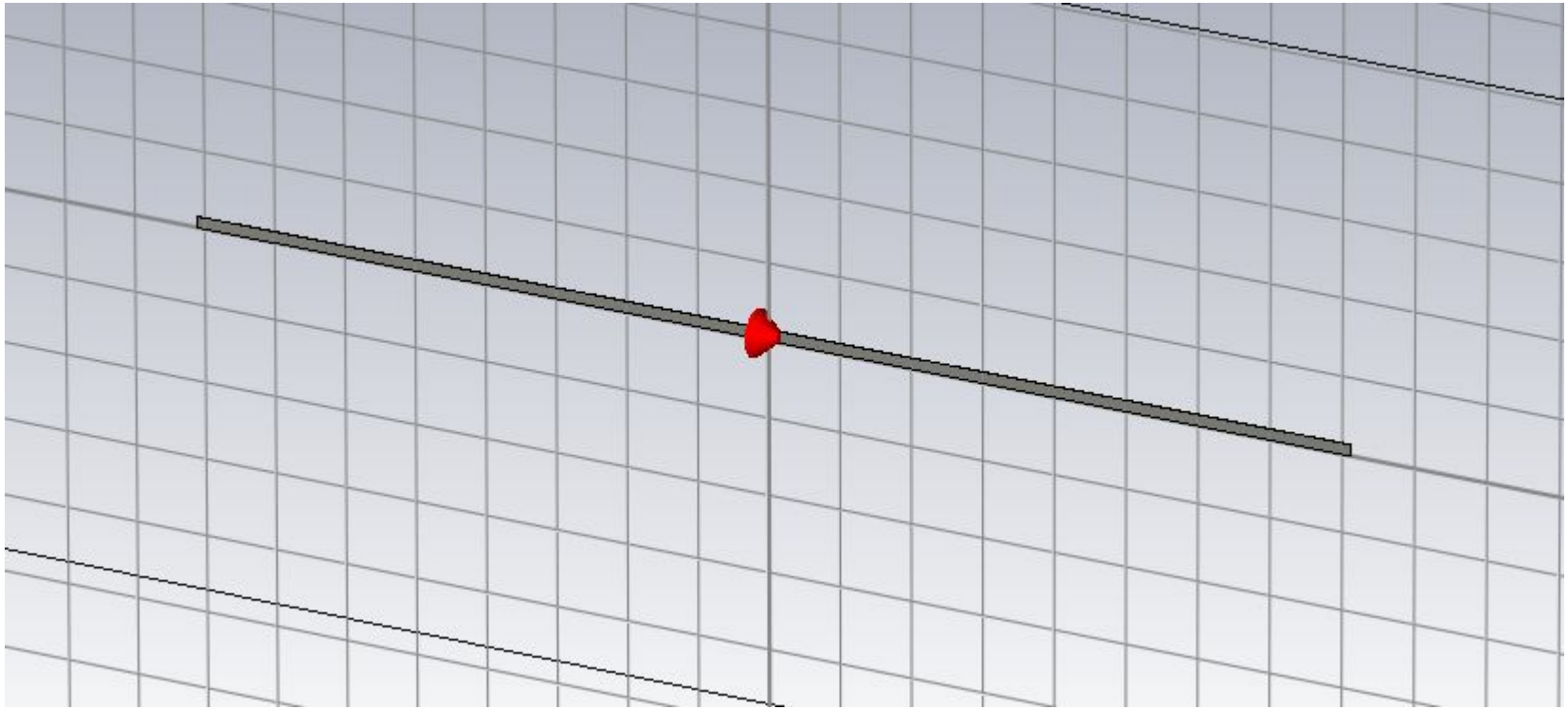

S11 Parameter

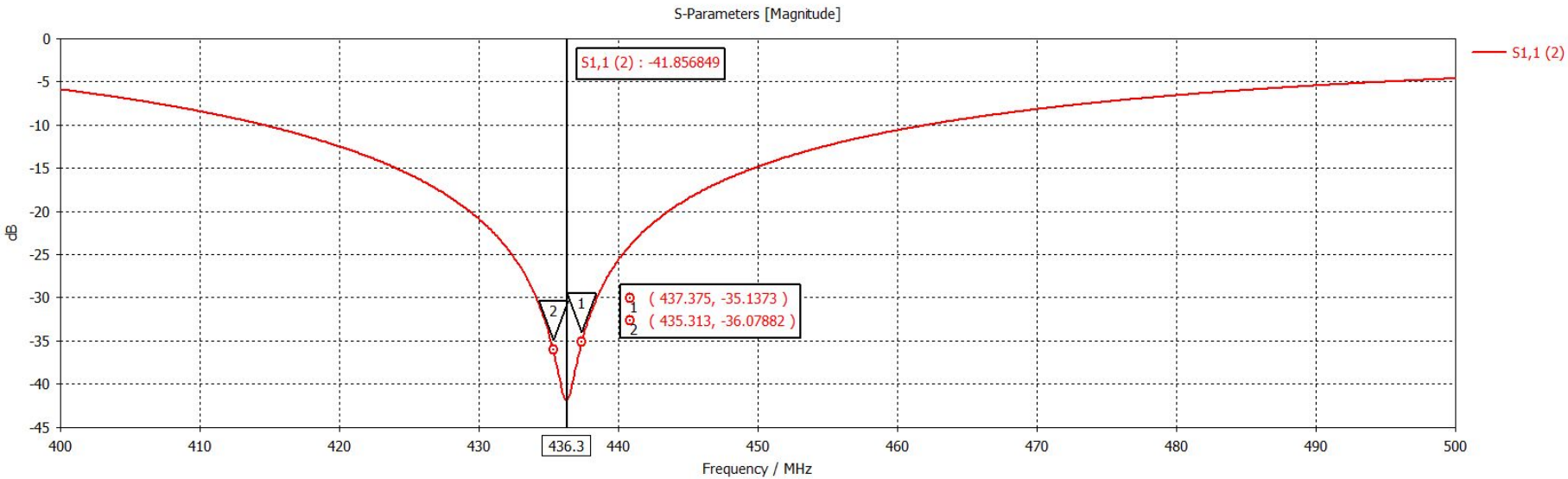

VSWR

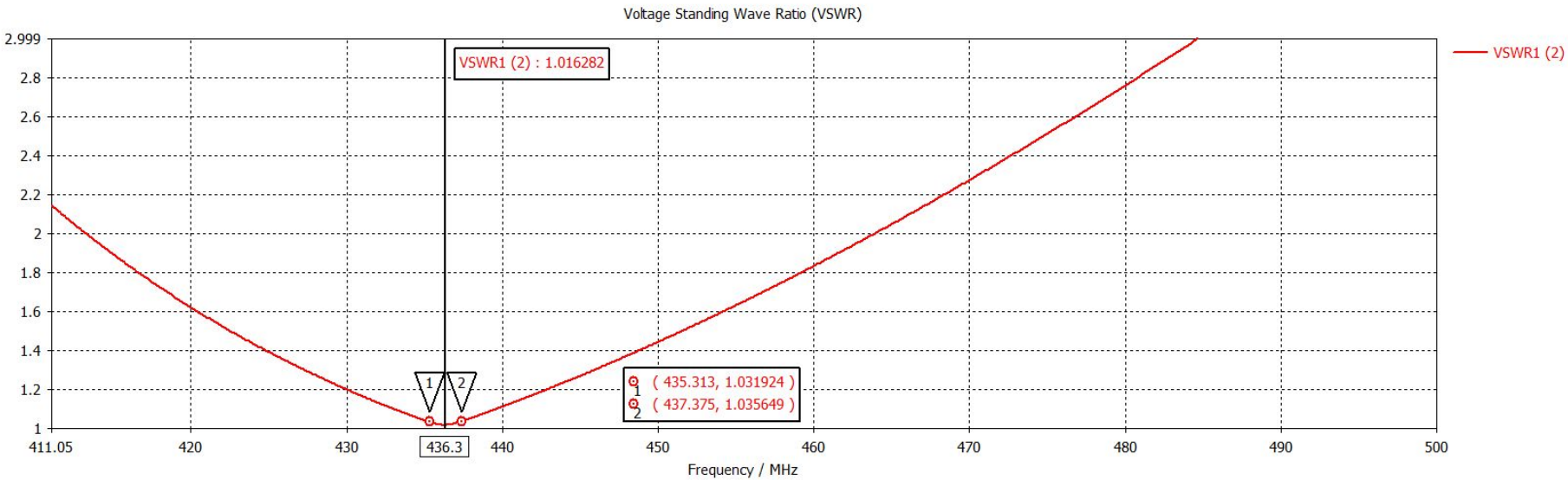
Voltage Standing Wave Ratio (VSWR)
VSWR1 (2) : 1.016282
VSWR1 (2)
(435.313, 1.031924)
(437.375, 1.035649)
2.999
2.8
2.6
2.4
2.2
2
1.8
1.6
1.4
1.2
1
411.05
420
430
436.3
440
450
460
470
480
490
500
Frequency / MHz

3D-Radiation Pattern

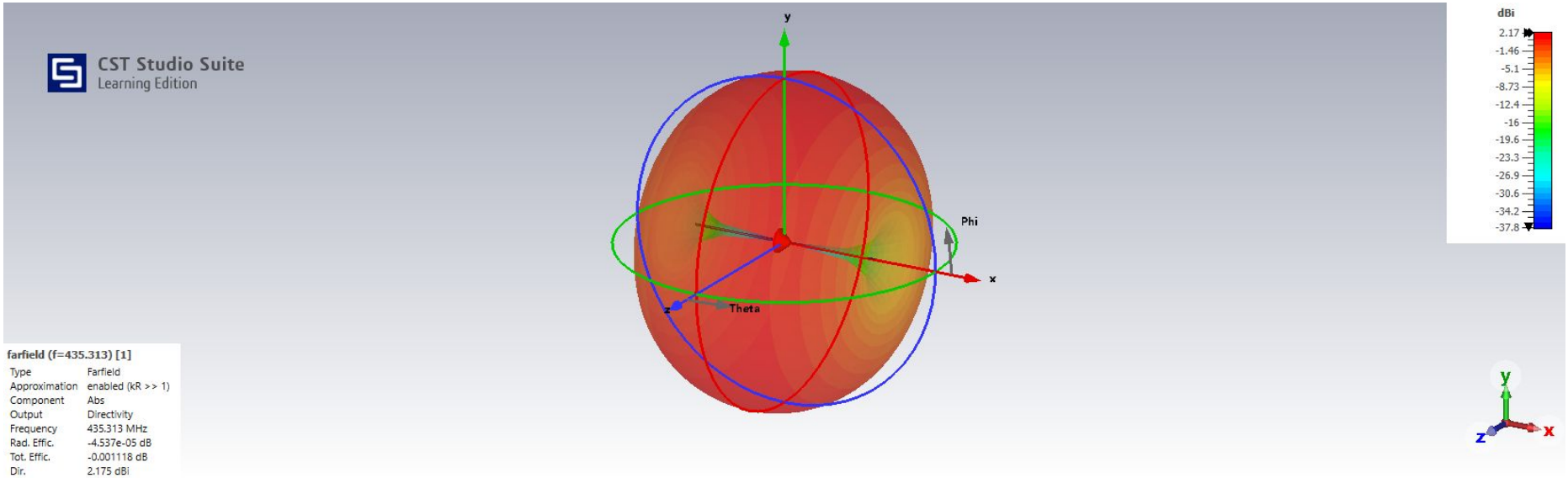

Uplink Frequency: 435.313 MHz

3D-Radiation Pattern

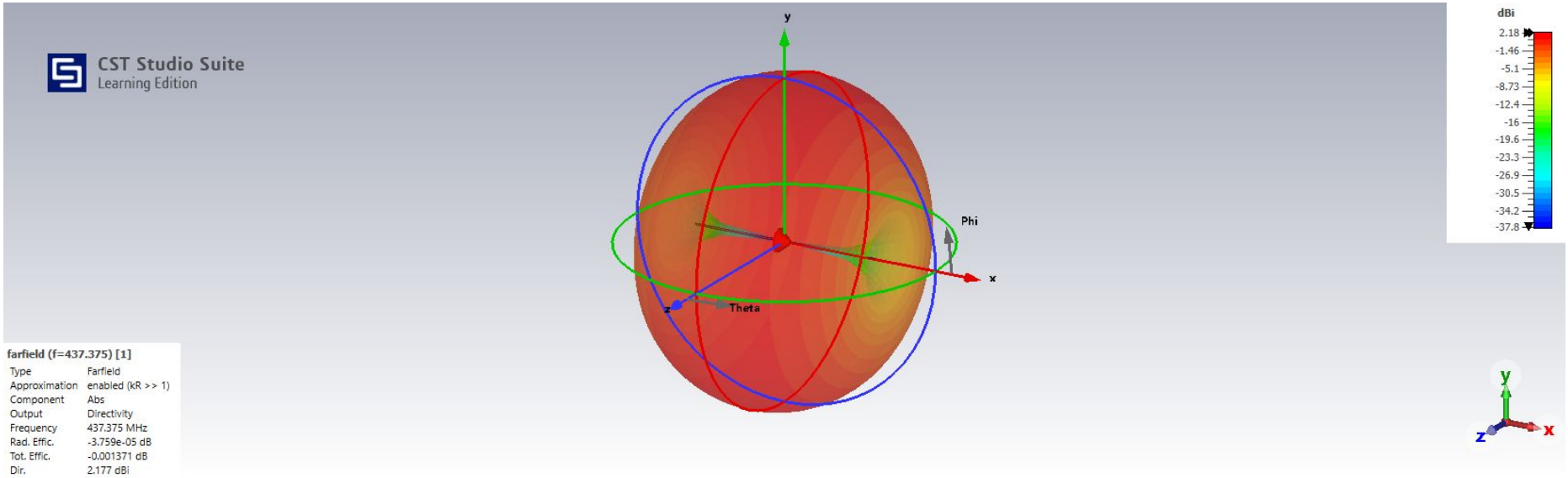

Downlink Frequency: 437.375 MHz

2D-Radiation Pattern

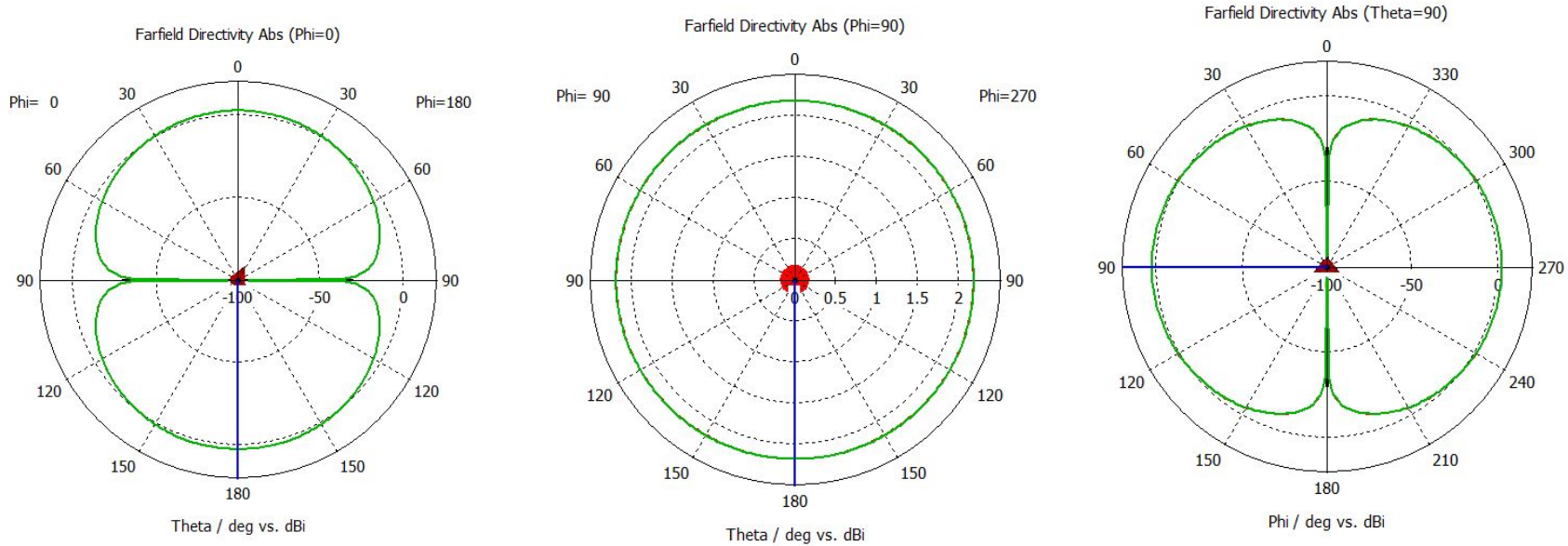

PHI = 0 PHI = 90 Theta = 90

Far-Field

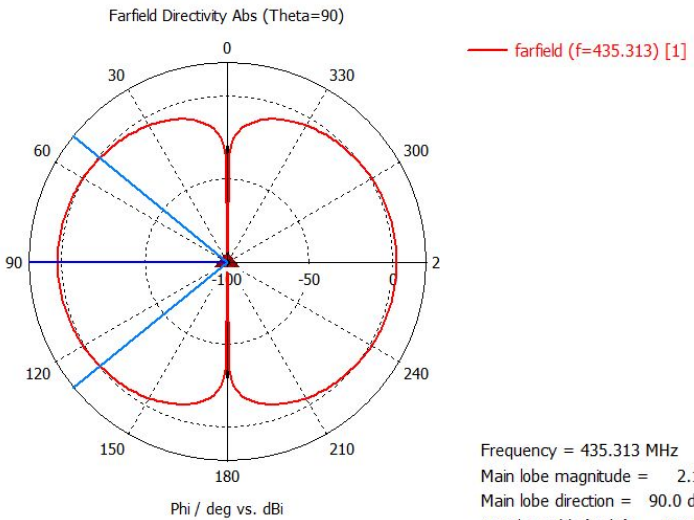

Frequency = 435.313 MHz
Main lobe magnitude = 2.17 dBi
Main lobe direction = 90.0 deg.
Angular width (3 dB) = 78.4 deg.

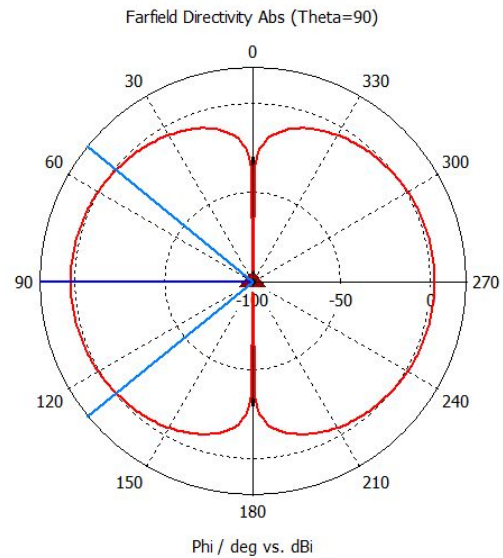

Frequency = 437.375 MHz
Main lobe magnitude = 2.18 dBi
Main lobe direction = 90.0 deg.
Angular width (3 dB) = 78.3 deg.

E-Field Radiation

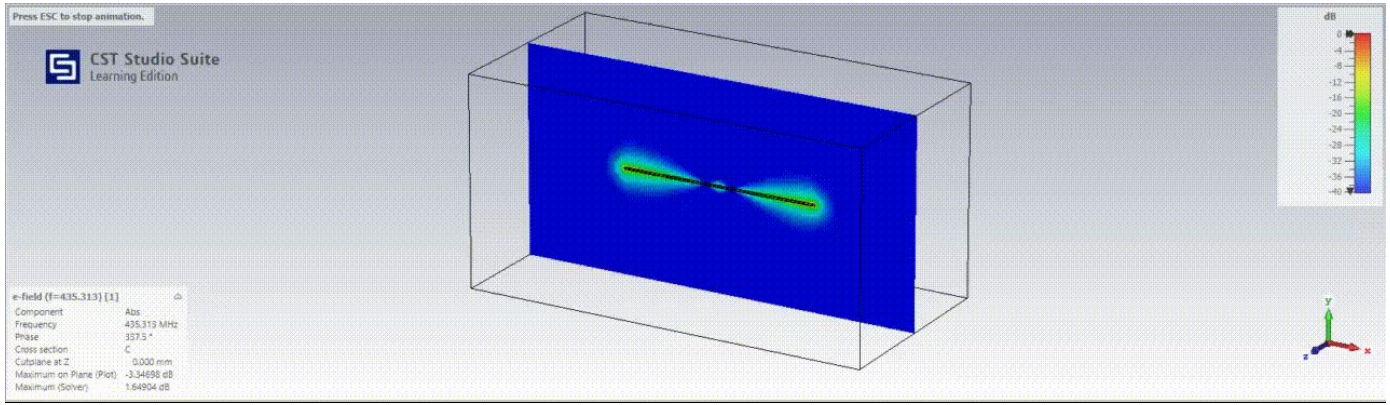

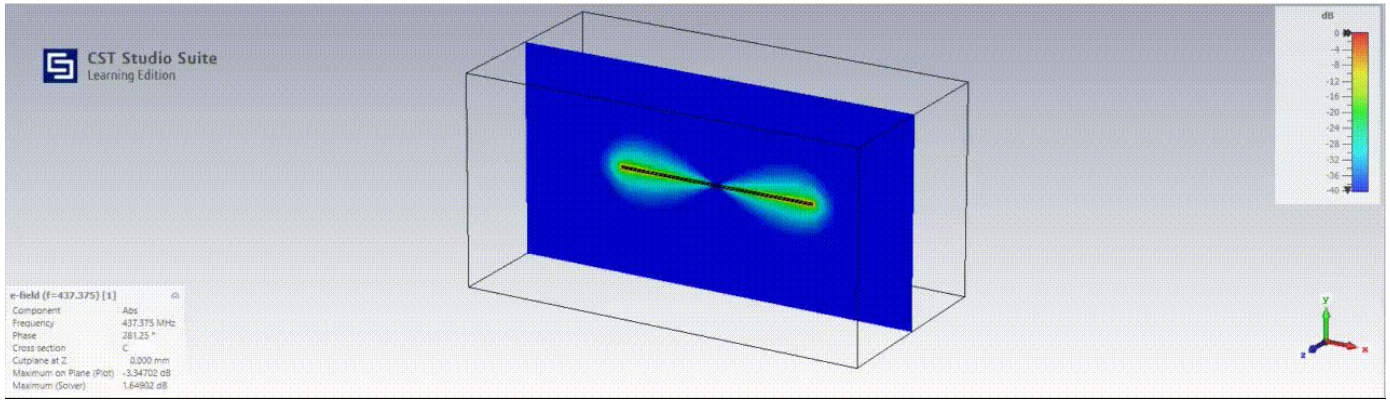
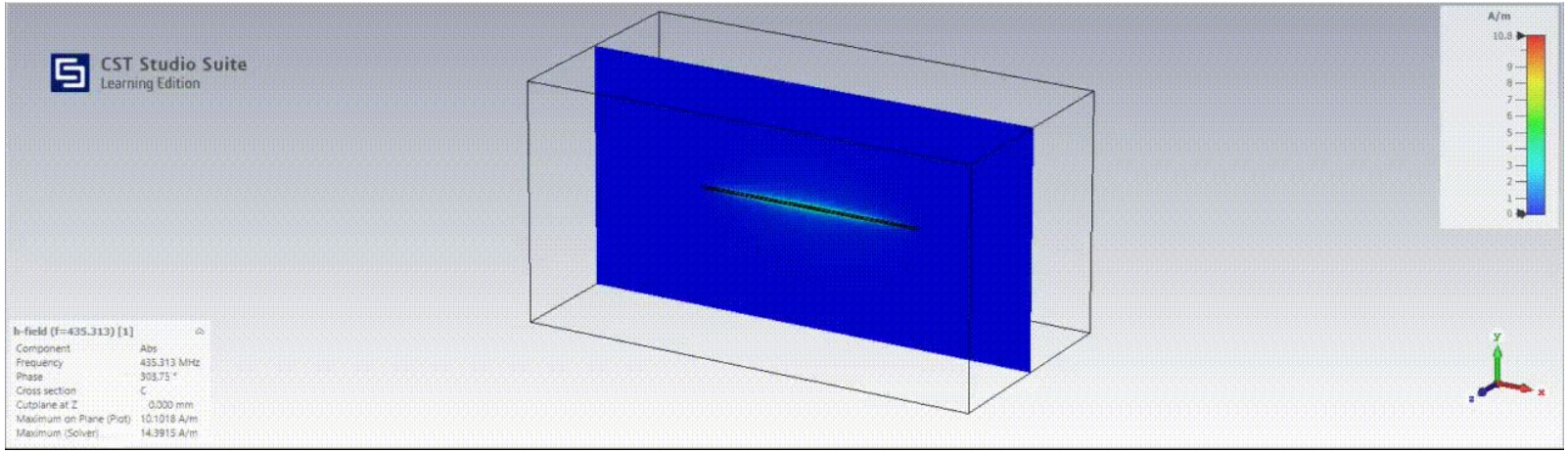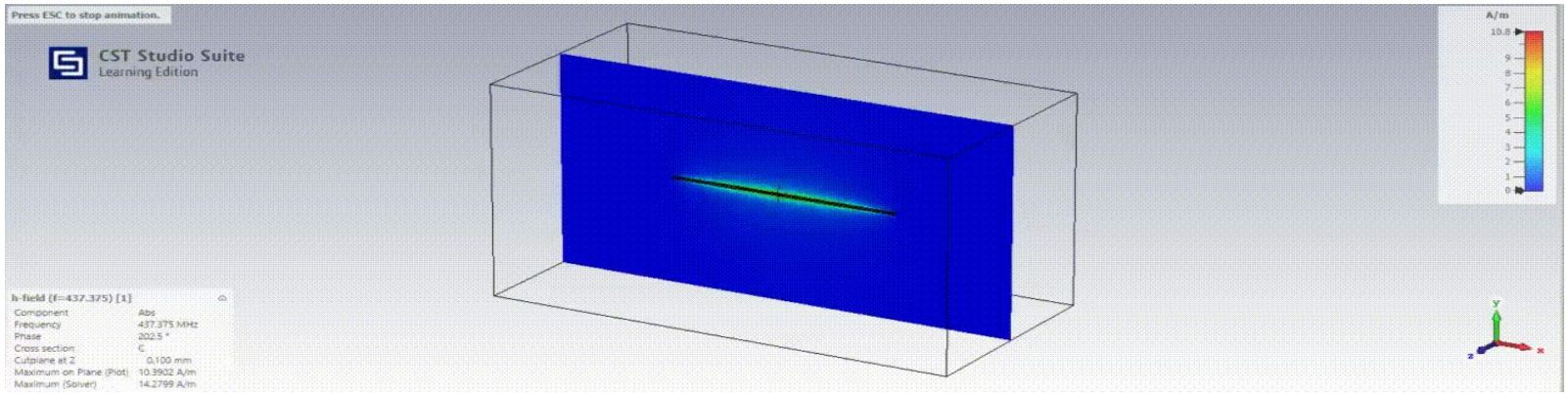
H-Field Radiation