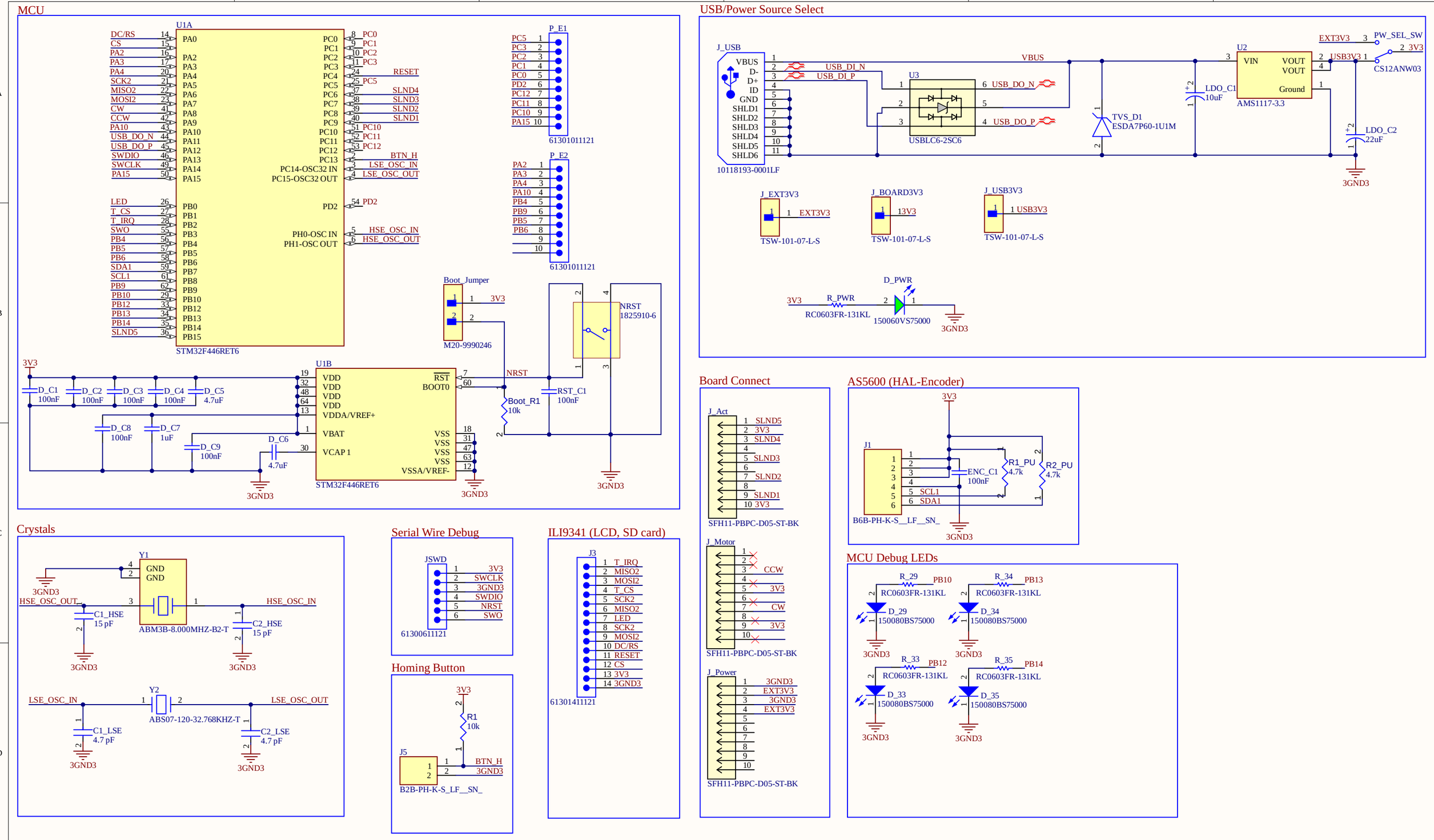
MCU
U1A
STM32F446RET6
P_E1
61301011121
P_E2
61301011121
Boot_Jumper
M20-9990246
NRST
1825910-6
U1B
STM32F446RET6
Boot_R1
10k
RST_C1
100nF
USB/Power Source Select
J_USB
10118193-0001LF
USB_DI_N
USB_DI_P
U3
USBLC6-2SC6
USB_DO_N
USB_DO_P
VBUS
TVS_D1
ESDA7P60-1U1M
LDO_C1
10uF
U2
AMS1117-3.3
EXT3V3
PW_SEL_SW
USB3V3
CS12ANW03
LDO_C2
22uF
3GND3
J_EXT3V3
TSW-101-07-L-S
J_BOARD3V3
TSW-101-07-L-S
J_USB3V3
TSW-101-07-L-S
D_PWR
R_PWR
RC0603FR-131KL
150060VS75000
Board Connect
J_Act
SFH11-PBPC-D05-ST-BK
J_Motor
SFH11-PBPC-D05-ST-BK
J_Power
SFH11-PBPC-D05-ST-BK
AS5600 (HAL-Encoder)
J1
B6B-PH-K-S__LF__SN_
ENC_C1
100nF
R1_PU
4.7k
R2_PU
4.7k
MCU Debug LEDs
R_29
PB10
RC0603FR-131KL
D_29
150080BS75000
R_34
PB13
RC0603FR-131KL
D_34
150080BS75000
R_33
PB12
RC0603FR-131KL
D_33
150080BS75000
R_35
PB14
RC0603FR-131KL
D_35
150080BS75000
Crystals
Y1
ABM3B-8.000MHz-B2-T
HSE_OSC_IN
HSE_OSC_OUT
C1_HSE
15 pF
C2_HSE
15 pF
Y2
ABS07-120-32.768KHZ-T
LSE_OSC_IN
LSE_OSC_OUT
C1_LSE
4.7 pF
C2_LSE
4.7 pF
Serial Wire Debug
JSWD
61300611121
Homing Button
R1
10k
J5
B2B-PH-K-S_LF__SN_
BTN_H
ILI9341 (LCD, SD card)
J3
61301411121