SRI LANKA INSTITUTE OF INFORMATION TECHNOLOGY

Faculty of Engineering

Development of Sensor Fusion and Muscular Stimulating Configuration Integrated Instrumentation and Measurement Approach for Management and Prevention of Cervical Kyphosis

by

Rishoban K.

B.Sc in Electrical and Electronic Engineering

November 2024

DECLARATION

I hereby declare that this thesis submitted to the Department of Electrical and Electronic Engineering, Faculty of Engineering, Sri Lanka Institute of Information Technology in partial fulfillment of the requirements for the award of the degree of Bachelor of Science of Engineering Honours in Electrical and Electronic Engineering is based on work done by me. The contents of this thesis have not been submitted by me to any other university or institute for the award of any other degree or diploma.

Signature:

Name in Full: Kandeepan Rishoban

Registration No: EN21482748

Date: November 12, 2024

EXECUTIVE SUMMARY

This project addresses the challenges posed by Kyphosis, a condition that affects a large portion of the population across different age groups. Kyphosis is the excessive outward curvature of the spine, particularly in the thoracic region, and can lead to health risks such as back pain, restricted movement, organ compression, and a heightened fracture risk. While surgical options exist for severe cases, non-surgical methods like bracing and physical therapy are primary treatments. However, these methods lack continuous monitoring, hindering personalized treatment adjustments crucial for effective management.

This project presents a transformative approach by integrating Neuromuscular Electrical Stimulation (NEMS) with a kyphosis brace. This integrated system leverages advanced sensor technologies and data analytics to provide personalized interventions and continuous monitoring, addressing the limitations of traditional treatment methods. The NEMS component targets key muscle groups critical for spinal alignment, while the brace offers support and alignment assistance. Real-time feedback from sensors and NEMS adjustments via the brace enable corrective actions and muscle strengthening tailored to individual needs. This approach not only improves Kyphosis management but also prevents further curvature, promoting spinal health and functional abilities.

By combining NEMS with a brace system, our solution sets a new standard in non-surgical spine health care, offering enhanced treatment outcomes and empowering patients to take control of their rehabilitation progress.

TABLE OF CONTENTS

DECLARATION ii
EXECUTIVE SUMMARY iii
TABLE OF CONTENTS iv
TABLE OF FIGURES vi
LIST OF TABLES vii
1. INTRODUCTION 2
1.1 Justification of Problem 2
1.2 Problem Statement 5
1.3 Definition of the Scope of the Problem 7
1.4 Scope of the Project 9
1.5 Literature Review 10
1.6 Proposed Solutions 12
1.7 Implementation and Evaluation 12
1.8 Design Block Diagram 13
1.9 Objectives proposed and specific objectives 15
2. DESIGN METHODOLOGY 17
2.1 Overall Design 17
2.2 Main Technical Content 19
2.2.1 Signal Processing and Data Handling 21
2.2.2 Power Management System 22
2.3 Components used 35
2.3.1 MyoWare Muscle Sensor 35
2.3.2 GY-521 MPU6050 Gyroscope 36
2.3.3 ESP32 Microcontroller 37
2.3.4 Raspberry Pi 5 38
2.3.5 Micro DC Vibration Motor 1027 and Supporting Components 39
2.3.6 Power Management System (Battery Pack, BMS, and Buck Converter) 40
3. RESULTS 42
3.1 Signal Processing and Data Handling 42
..... 43
3.2 Power Management System 44
3.3 Hardware and Feedback Mechanism Design 45
3.4 Dataset Acquisition Output 47
4. CONCLUSION 50

4.1 Learning from the Comprehensive Design Project 50
4.2 Limitations and Challenges 51
4.3 Future Development 53
REFERENCES.....55
APPENDICES 57

TABLE OF FIGURES

Figure 1. 1: Illustration of Spinal Shape 2
Figure 1. 2: Conventional Brace for Kyphosis.....2
Figure 1. 3: Affected Muscle Group 8
Figure 1. 4: Simplified Block Diagram.....13
Figure 1. 5: Block Diagram.....14

Figure 2. 1: : Power Supply Prototype.....23
Figure 2. 2: Sensors and Vibration Motors 24
Figure 2. 3: Schematic Diagram 25
Figure 2. 4:: PCB Layout 26
Figure 2. 5: 3D Layout – Top & bottom view.....27
Figure 2. 6: : Final PCB 29
Figure 2. 7: : Vibration Motors Prototype.....**Error! Bookmark not defined.**
Figure 2. 8: : Schematic diagram for Vibration Motors 31
Figure 2. 9: Dataset Collection.....33
Figure 2. 10: MyoWare Muscle Sensor.....35
Figure 2. 11: GY-521 MPU6050 Gyroscope.....36
Figure 2. 12: ESP32 Microcontroller 37
Figure 2. 13: Raspberry Pi 5 Pinout diagram.....38
Figure 2. 14: Micro DC Vibration Motor.....39
Figure 2. 15: 18650 Lithium-Ion Batteries 40
Figure 2. 16: 4S 10A Battery Protection Board 40
Figure 2. 17: LM7805 IC and capacitor.....40

Figure 3. 1: Processed signals from all 6 sensors 43
Figure 3. 2: Output from BMS.....44
Figure 3. 3: : Input to the system 44
Figure 3. 4: User testing of Brace 45
Figure 3. 5: Inner view.....46
Figure 3. 6: Outer view 47
Figure 3. 7: Raw EMG Data for 55° 48
Figure 3. 8: Raw EMG Data for 45° 48
Figure 3. 9: Raw EMG Data for 90° 49
Figure 3. 10: Raw EMG Data for 75° 49
Figure 3. 11: Raw EMG Data for 65° 49

LIST OF TABLES

Table 1: Objectives.....15

1. INTRODUCTION

1.1 Justification of Problem

Kyphosis, a medical condition marked by an excessive outward curvature of the upper back, presents a considerable health challenge that impacts individuals across various age groups, particularly middle-aged adults. When left untreated, severe kyphosis can result in numerous debilitating effects, including persistent back pain, restricted mobility, respiratory issues, and a profoundly diminished quality of life. The abnormal curvature not only affects the musculoskeletal structure but also exerts additional pressure on the internal organs, thereby complicating breathing and other vital functions. Addressing this condition promptly is crucial to prevent these adverse outcomes and to ensure better overall health and well-being. Furthermore, the social and psychological impact of kyphosis, such as decreased self-esteem and social isolation, underscores the importance of effective intervention and management strategies.

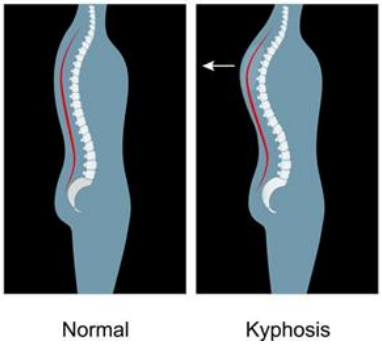

Figure 1. 1: Illustration of Spinal Shape

Figure 1. 2: Conventional Brace for Kyphosis

Posture correction plays a crucial role in managing kyphosis, and sensor technologies can greatly enhance this aspect. These tools can monitor spinal alignment and movement patterns, offering immediate feedback to patients upon detecting poor posture. This instant feedback allows for prompt correction and reinforcement of proper posture habits. Furthermore, these technologies can be integrated with biofeedback systems or mobile apps, enabling patients to

receive visual or auditory cues regarding their posture during daily activities or targeted exercises, promoting better body awareness and compliance.

Effective treatment of kyphosis and posture correction in children, adolescents, and adults extends benefits beyond physical improvements. It can boost self-esteem and confidence by enhancing body image and fostering a positive self-perception. Maintaining good posture has also been linked to improved focus, concentration, and academic performance, potentially enhancing learning outcomes. Intervening to correct poor posture in childhood can establish lifelong habits of good posture and body mechanics, reducing the risk of posture-related issues in adulthood.

The impact of kyphosis extends far beyond mere physical discomfort. The prominent postural deformity associated with this condition can inflict significant psychological distress, particularly during critical developmental periods such as adolescence. This distress often manifests as a negative body image, diminished self-esteem, and social withdrawal, further exacerbating the already substantial burden of the condition. The psychological ramifications are profound, as individuals may struggle with self-acceptance and face stigmatization, which can hinder social interactions and personal development.

Moreover, the repercussions of kyphosis can persist throughout a person's life. Improper spinal alignment and poor postural habits established during formative years can become deeply ingrained, leading to chronic musculoskeletal issues and a host of related health problems in adulthood. These long-term consequences underscore the critical need for early intervention and effective management strategies to prevent the establishment of these detrimental patterns.

Existing non-surgical treatment options, such as bracing and physical therapy, offer certain benefits but often fall short in addressing the root causes of kyphotic posture, namely the underlying muscular imbalances. Traditional approaches frequently lack the capacity to provide real-time feedback, which is essential for optimal outcomes. Furthermore, these methods often suffer from poor patient compliance, as the treatments can be cumbersome and uncomfortable, leading to extended recovery periods and less-than-optimal results.

To truly mitigate the extensive consequences of kyphosis, it is imperative to adopt innovative treatment strategies that target the underlying muscular imbalances while also enhancing patient engagement and compliance. Early, proactive, and multifaceted intervention can play a pivotal role in not only correcting postural abnormalities but also in preventing the long-lasting physical and psychological effects associated with kyphosis. This comprehensive approach is

essential to ensure better long-term health outcomes and an improved quality of life for those affected by this condition.

There is a pressing need for a comprehensive, non-invasive, and patient-centric solution to address kyphosis effectively. By harnessing the potential of wearable technologies, sensor integration, and targeted muscle stimulation, we have the opportunity to develop a groundbreaking approach that tackles the root causes of kyphosis head-on. Such an innovative solution could not only facilitate long-term postural correction and muscular conditioning but also instill lifelong positive posture habits from an early age. This empowers individuals to take proactive control of their spinal health and overall well-being.

Implementing a comprehensive solution to this issue has the potential to significantly alleviate the multifaceted burdens associated with kyphosis, including the physical discomfort, psychological distress, and social challenges it brings. By improving posture and spinal alignment, individuals can experience reduced pain, enhanced mobility, and better overall health. Additionally, addressing the psychological impact of kyphosis, such as poor body image and low self-esteem, can lead to improved mental health and social engagement.

The current moment is opportune for the development and implementation of such innovative solutions, which could have a profound impact on the lives of individuals suffering from kyphosis. This is especially crucial during the critical developmental stages of childhood and adolescence, when establishing proper posture habits can lead to long-term benefits. By focusing on early intervention and comprehensive management strategies, we can mitigate the long-term consequences of kyphosis and improve the quality of life for those affected by this debilitating condition.

Moreover, a patient-centric approach that leverages advanced technology ensures higher levels of engagement and compliance, which are often lacking in traditional treatments. This not only enhances the effectiveness of the intervention but also shortens recovery times and optimizes outcomes. By prioritizing the needs and experiences of patients, we can create a more effective and sustainable solution to kyphosis, ultimately fostering a healthier and more empowered population.

The time is ripe for embracing innovative solutions that can revolutionize the management of kyphosis. By addressing the condition's physical, psychological, and social dimensions, we can significantly enhance the well-being of individuals affected by kyphosis, paving the way for healthier, more fulfilling lives.

1.2 Problem Statement

Kyphosis, which manifests as an excessive outward curvature of the upper spine, presents substantial challenges in its non-surgical management. The condition is often managed through methods such as bracing and physical therapy, but these traditional treatments frequently encounter significant limitations that impede their long-term success.

One of the primary issues with these conventional methods is the lack of patient adherence, particularly among younger individuals. Braces, while necessary for correcting posture, can be uncomfortable and restrictive, resulting in poor compliance with the prescribed treatment regimen. Similarly, traditional exercises rely heavily on patient motivation, consistent participation, and the therapist's ability to accurately identify and correct specific muscle imbalances. Without proper patient engagement and personalized interventions, the effectiveness of these exercises is often compromised.

Furthermore, existing non-surgical treatments frequently fail to provide real-time feedback, objective progress tracking, and personalized adjustments based on individual patient needs and responses. This deficiency can lead to inefficient or ineffective treatment strategies, prolonged recovery periods, and a failure to adequately address the underlying muscular imbalances contributing to kyphotic posture. The absence of immediate feedback means that patients and therapists cannot accurately assess the effectiveness of the interventions in real-time, which can delay necessary adjustments and improvements.

To overcome the limitations of traditional kyphosis management methods, there is a critical need for an innovative, technology-assisted solution that actively monitors and retrains specific muscle groups responsible for maintaining proper spinal alignment. A promising approach involves integrating Electromyography (EMG) and gyroscopic sensors into a kyphosis brace. This advanced system is designed to bridge gaps left by conventional methods, providing a more effective and patient-centered approach to managing kyphosis.

By continuously monitoring muscle activity through EMG sensors and tracking spinal angles with a gyroscope, the system can identify underactive or underutilized muscle groups contributing to kyphotic posture. Targeted vibration motors are then activated in these areas to stimulate muscle engagement and retraining. These vibration-based cues encourage muscle activation and awareness, helping to correct muscular imbalances and promote long-term postural improvement. This technique directly addresses the root causes of postural misalignment, facilitating gradual muscle conditioning and habit formation.

Addressing these critical gaps in non-surgical kyphosis management is essential. Effective treatment and posture correction can result in improved spinal alignment, reduced pain, increased mobility, and flexibility. Furthermore, it helps prevent complications, enhances quality of life, boosts self-esteem and confidence, and establishes lifelong positive posture habits. The development of such a solution has the potential to revolutionize kyphosis management, offering patients a more comfortable, sustainable, and precise treatment option that significantly improves their overall well-being.

1.3 Definition of the Scope of the Problem

The brace is designed with advanced electromyography (EMG) sensors strategically positioned along the spine and adjacent regions to continuously monitor muscle activity. These sensors detect and record the electrical signals generated by muscle contractions, providing real-time data on the activation patterns and engagement of muscle groups essential for maintaining proper spinal alignment.

In addition to EMG sensors, a gyroscope sensor is integrated to measure the angle and movement of the spine. The gyroscope continuously monitors postural changes and spinal tilt, enabling the system to detect deviations from optimal alignment and identify patterns that may contribute to kyphotic posture. This data, combined with EMG readings, provides a comprehensive view of both muscular activity and postural orientation, enhancing the system's ability to identify problematic posture and muscular imbalances accurately.

Sophisticated algorithms process and analyze the combined EMG and gyroscope data to identify underutilized or imbalanced muscle groups and misalignments in spinal posture. By pinpointing these areas, the system highlights specific muscles that require activation and retraining to address postural deficiencies.

To facilitate this targeted intervention, the brace employs vibration motors positioned near key muscle groups. These motors provide localized vibration feedback, encouraging muscle engagement and retraining. The system dynamically adjusts the vibration cues based on real-time feedback from the EMG and gyroscope sensors, ensuring that specific muscles receive cues to activate and strengthen as needed. This vibration-based feedback promotes muscle awareness and helps correct compensatory patterns, supporting improved muscular balance and coordination.

This integrated approach—combining real-time EMG monitoring, spinal angle measurement through the gyroscope, and targeted vibration feedback—directly addresses the root causes of muscular imbalances and misalignments contributing to kyphotic posture. By encouraging the activation and strengthening of specific muscle groups essential for spinal alignment, the brace supports long-term postural correction and muscular conditioning tailored to each individual's needs.

The usability and acceptability of the system will be evaluated through user input sessions and usability testing, ensuring it is user-friendly, comfortable, and engaging for adults. Additionally, feedback from caregivers and healthcare professionals will be collected on

integrating the system into daily routines and effectively managing kyphosis-related concerns. Practical considerations, including financial constraints, time limitations, and technical feasibility, will guide the project's scope, ensuring alignment with the project's objectives.

To meet the approximately seven-month timeframe, key objectives will be prioritized, with an emphasis on resource optimization and risk management. This structured approach aims to ensure that the posture correction system is not only effective in enhancing posture and musculoskeletal health but is also accessible and practical for adults with kyphosis.

The brace targets key muscle groups critical for maintaining proper spinal alignment, including the rhomboids, erector spinae, trapezius, and deep cervical flexors. By focusing on these muscles, the brace helps improve shoulder retraction, spinal alignment, and head and neck posture, addressing excessive spinal curvature and reducing strain. This comprehensive approach fosters balanced musculature, supporting long-term postural correction and overall musculoskeletal health.

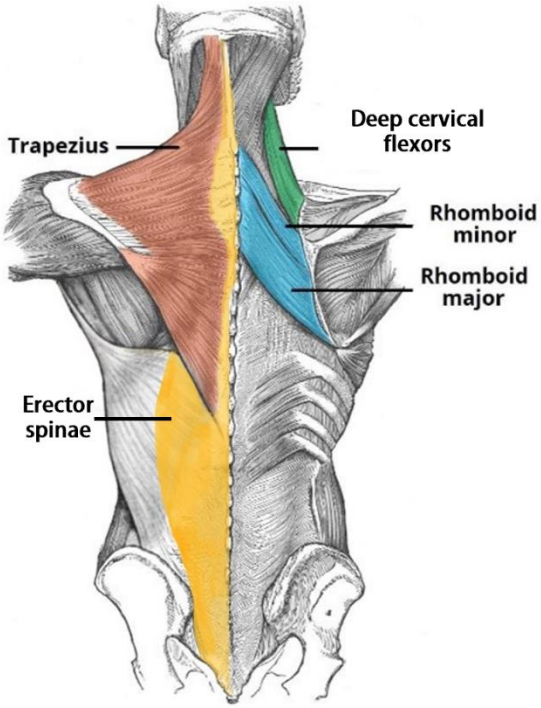

Figure 1. 3: Affected Muscle Group

1.4 Scope of the Project

The scope of the project revolves around three innovative solutions designed to address posture-related issues, kyphosis treatment, and the monitoring of physiotherapy exercises among adults aged 40 to 60. The project specifically focuses on individuals with kyphosis or those at risk due to sedentary habits. While kyphosis can affect individuals at any age, certain types of kyphosis are more prevalent in specific age groups:

- Postural Kyphosis: Often seen in adolescents and teenagers, particularly during growth spurts.
- Scheuermann’s Kyphosis: Typically diagnosed between the ages of 13 and 16, during rapid bone growth.
- Age-related Hyperkyphosis: Affects 20-40% of older adults and is associated with aging. The incidence increases after age 40, more rapidly in women than men.

Despite these age associations, kyphosis can develop due to various factors at any life stage, including poor posture habits, osteoporosis-related vertebral compression fractures, Scheuermann's disease, spinal injuries or trauma, congenital malformations, neuromuscular conditions, spinal tumors, and inflammation.

1.5 Literature Review

Kyphosis, a common spinal deformity characterized by an excessive outward curvature of the spine, has significant impacts on muscle function and posture. Electromyography (EMG) is widely used to analyze muscle activity, providing valuable insights into the neuromuscular function of individuals with kyphosis. This review summarizes recent advances in EMG signal analysis and processing techniques applied to back muscles for kyphosis, the integration of gyroscope sensors, the use of vibration-based feedback, as well as the selection, coding, and synchronization of devices and data collections.

The study by Zheng et al. (2020) explored the EMG characteristics of the paraspinal muscles in individuals with kyphosis. The authors found significant alterations in muscle activation patterns, with increased activity in the thoracic region and decreased activity in the lumbar region compared to healthy controls. These findings highlight the compensatory mechanisms employed by individuals with kyphosis to maintain posture and stability [1].

Signal processing techniques are crucial for extracting meaningful information from EMG signals. Fourier Transform (FT) and Wavelet Transform (WT) are commonly used methods. In their comprehensive review, Kumar and Kumar (2021) discussed various signal processing techniques for EMG analysis, emphasizing the importance of WT in capturing the transient and non-stationary nature of EMG signals. WT provides better time-frequency localization compared to FT, making it more suitable for analyzing the dynamic muscle activity in kyphosis [2].

Effective feature extraction and classification methods are essential for diagnosing and monitoring kyphosis. Huang et al. (2019) proposed a novel feature extraction technique based on the Empirical Mode Decomposition (EMD) method. Their approach showed improved accuracy in distinguishing between kyphotic and non-kyphotic subjects, which is critical for effective corrective interventions in posture [3].

The recent use of vibration-based feedback offers an effective non-invasive approach for muscle activation and postural correction. MacIntyre et al. (2020) demonstrated that targeted vibration applied to specific muscle groups can stimulate muscle engagement and awareness, prompting corrective postural adjustments. This method offers an alternative to electrical stimulation, supporting continuous use due to its increased comfort and reduced irritation, which is essential for prolonged postural management in kyphotic patients [18].

Gyroscope sensors play a key role in providing real-time data on spinal angles and movement patterns, supplementing EMG data for comprehensive postural assessment. Gyroscopes measure angular velocity, which allows precise tracking of spinal orientation and the detection of deviations from optimal alignment. Nakajima et al. (2021) illustrated that combining EMG with gyroscope data enhances postural assessment accuracy, offering improved insights into dynamic postural changes, which is particularly valuable in kyphosis management [19].

Selecting appropriate devices is crucial for effective kyphosis monitoring. Surface electromyography (sEMG) sensors and wearable gyroscope modules are commonly used. sEMG sensors measure muscle activity, providing insights into muscle function and posture. Esfand and Farahmand (2021) highlighted the effectiveness of sEMG sensors in monitoring muscle activation patterns in kyphotic patients. The study emphasized the importance of sEMG in both diagnosis and rehabilitation [5]. Wearable gyroscopes are effective in capturing spinal angles and movements. Wang et al. (2020) developed a wearable gyroscope system integrated into clothing for posture monitoring, demonstrating high accuracy and user comfort, making it a promising solution for kyphosis management [6].

Coding plays a critical role in processing and analyzing the data collected from multiple devices, involving algorithms for signal processing, feature extraction, and data synchronization. Signal processing techniques such as filtering, normalization, and transformation are essential for extracting meaningful features from raw data. Chen et al. (2021) developed a signal processing framework for sEMG and gyroscope data, which improved the accuracy of posture classification in kyphotic patients [7]. Synchronizing data from EMG and gyroscope sensors is essential to ensure temporal alignment and cohesive analysis. Chen et al. (2021) also proposed a method to synchronize sEMG and gyroscope data, allowing for a more comprehensive analysis of muscular activity and postural behavior in kyphosis management [7].

1.6 Proposed Solutions

- Posture-Correcting Chair Cover: The first component involves designing and implementing a chair cover equipped with sensors to detect sitting posture in real-time. This system will provide immediate feedback to users, notifying them of incorrect posture and guiding them towards proper alignment. Integration with mobile applications or other devices will facilitate efficient data collection and analysis, ensuring personalized and effective posture correction strategies. This system aims to help users maintain correct sitting posture, preventing the development of kyphosis and potentially improving existing kyphosis.
- Brace for Kyphosis Treatment: The second component aims to develop a brace equipped with sensors to monitor kyphosis correction progress in real-time. This brace will transmit data to a mobile application or monitoring system, allowing continuous tracking and analysis of kyphosis-related metrics. A feedback system within the brace and mobile application will help users maintain proper alignment during treatment, ensuring compatibility with various body sizes and shapes for maximum effectiveness.

1.7 Implementation and Evaluation

During development, intricate algorithms will be created to efficiently process large datasets, delivering timely feedback and corrective interventions. The posture correction system's effectiveness will be assessed through controlled experiments and longitudinal studies, focusing on improvements in posture, adherence to corrective interventions, and overall musculoskeletal health and well-being among adults with kyphosis.

User input sessions and usability testing will evaluate the system's usability and acceptability to ensure it is user-friendly, comfortable, and engaging for adults. Caregivers and healthcare professionals may provide feedback on integrating the system into daily routines and effectively managing kyphosis-related concerns. Practical constraints such as financial limitations, time constraints, and technical feasibility will be considered to manage the project's feasibility and align with predetermined objectives.

Key objectives will be prioritized, with resource optimization and risk management crucial for successfully completing the project within the allocated timeframe of approximately 7 months. This structured approach aims to ensure the posture correction system is not only effective in

improving posture and musculoskeletal health but also user-friendly and practical for adults with kyphosis.

1.8 Design Block Diagram

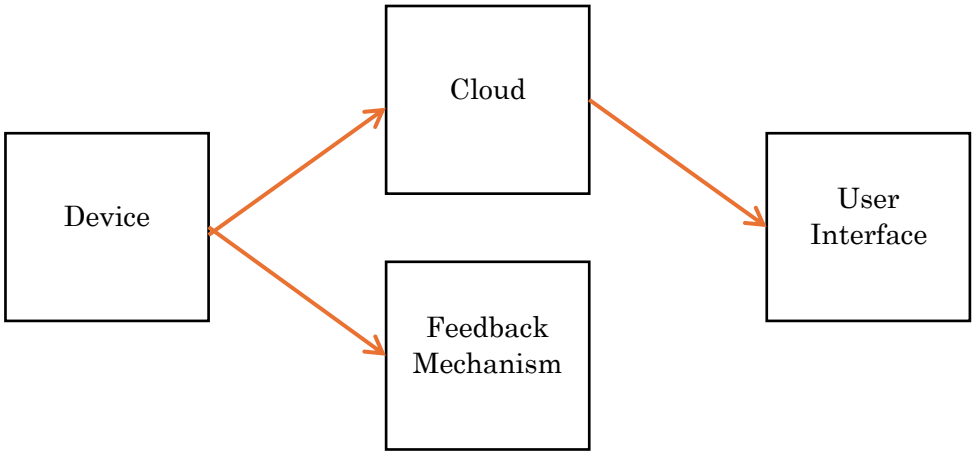

Figure 1. 4: Simplified Block Diagram

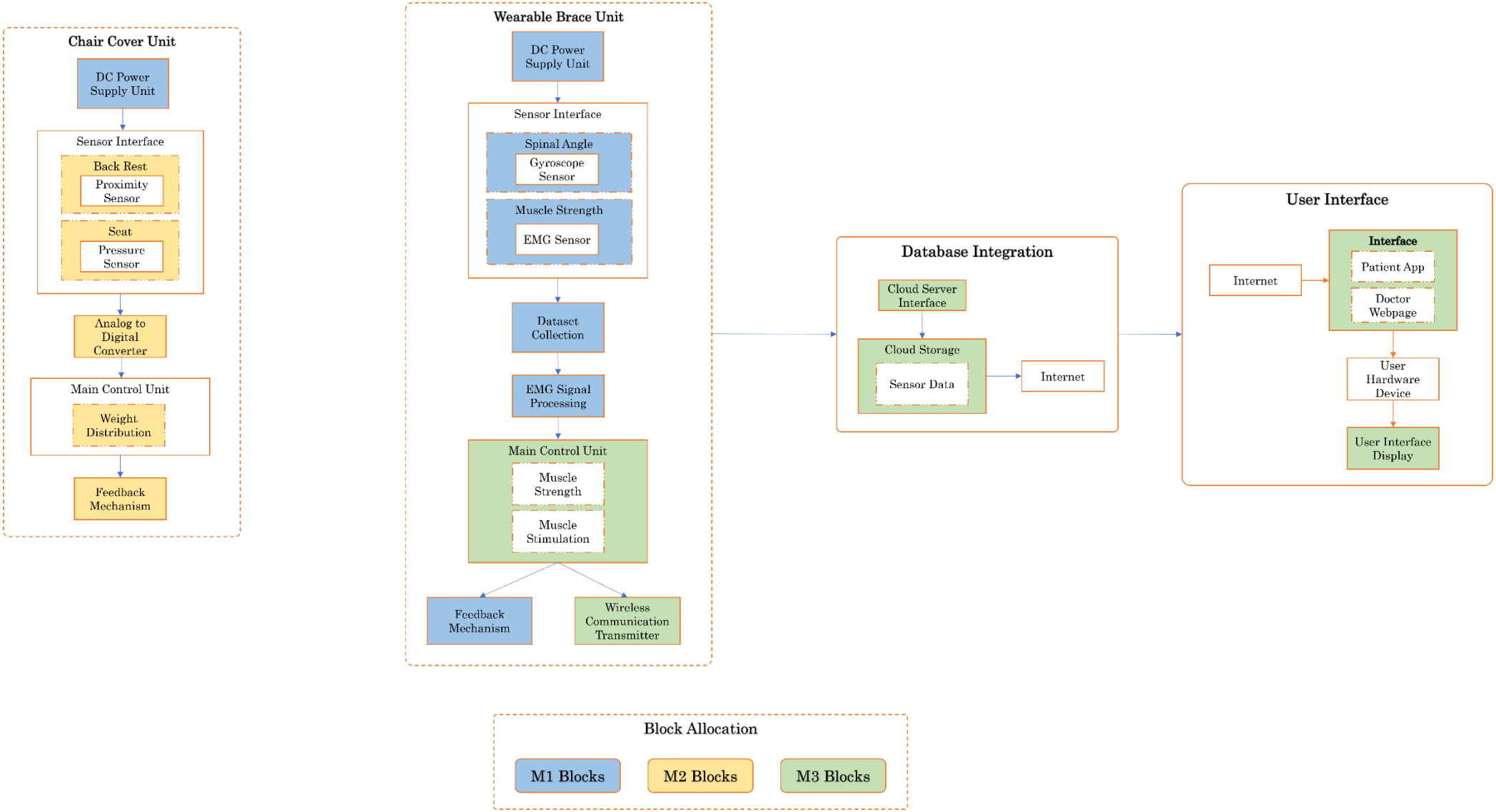

Figure 1. 5: Block Diagram

1.9 Objectives proposed and specific objectives

The table below consists of all the proposed and specific objectives.

Table 1: Objectives

Objectives	Specific Objectives
Design and develop an advanced EMG and gyroscope sensor system for continuous monitoring of muscle activity and spinal posture	• Identify optimal sensor placement locations along the spine and surrounding areas to capture relevant muscle activity and postural data. • Develop high-precision EMG sensors capable of accurately detecting and recording electrical signals from muscle contractions. • Integrate gyroscope sensors to monitor spinal angles and postural deviations in real-time. • Implement noise-filtering and signal-processing algorithms to enhance EMG and gyroscope data quality. • Seamlessly integrate the EMG and gyroscope sensor system into the kyphosis brace design.
Develop algorithms for EMG and gyroscope data analysis and postural assessment	• Develop algorithms to analyze EMG data and identify muscular imbalances and compensatory patterns contributing to kyphotic posture. • Use gyroscope data to track changes in spinal angle and detect deviations from optimal posture. • Establish baseline muscle activity and postural metrics for individual users to monitor progress. • Implement adaptive analysis methods to continuously update postural assessments based on treatment progress.
Design and integrate a targeted vibration feedback system within the kyphosis	• Determine optimal vibration motor placement for targeted stimulation based on EMG and gyroscope data.

brace system within the kyphosis brace	• Develop a programmable vibration feedback module capable of delivering controlled feedback cues to specific muscle areas. • Implement algorithms to adjust vibration feedback patterns based on real-time EMG and gyroscope monitoring. • Ensure seamless integration of the vibration feedback system with the EMG and gyroscope monitoring components within the brace design.
Develop a real-time feedback and monitoring system for user guidance and treatment progress tracking	• Implement data transmission and storage capabilities for continuous monitoring, analysis, and personalization of treatment plans. • Develop user-friendly interfaces and visualizations to enhance user engagement and understanding of treatment progress. • Enable accessible, real-time feedback to guide users in maintaining correct posture and muscle engagement.
Conduct comprehensive testing, evaluation, and optimization of the integrated system	• Design and execute controlled experiments and usability tests to assess the system's effectiveness in promoting postural correction and muscular conditioning. • Evaluate user experience, comfort, and acceptability through usability testing and feedback sessions with adults within the target age group. • Optimize system performance, algorithms, and treatment protocols based on empirical data and user feedback. • Ensure compliance with relevant safety standards and regulatory requirements for medical devices and wearable technologies.

2. DESIGN METHODOLOGY

2.1 Overall Design

This project aims to develop a comprehensive, non-invasive solution for kyphosis management by combining advanced sensor technologies, vibration-based feedback, and data processing to enable continuous monitoring and targeted posture correction. The system addresses the limitations of traditional kyphosis treatments by providing real-time feedback and personalized monitoring, facilitating more effective interventions.

The project's design incorporates multiple hardware components, including EMG sensors for muscle activity tracking and gyroscope sensors for spinal angle measurement. EMG sensors are strategically placed along the spine and adjacent areas to monitor muscle activation, while the gyroscope sensor provides critical data on spinal alignment and postural deviations. This combination enables a comprehensive assessment of the user's posture, allowing the system to detect patterns associated with kyphotic posture and highlight areas requiring corrective feedback.

Extensive efforts were made in the integration and configuration of hardware components, including the design and placement of vibration motors for feedback. The system utilizes vibration-based feedback rather than electrical stimulation, with vibration motors strategically positioned near target muscle groups. When the system detects muscle imbalances or postural misalignments based on EMG and gyroscope data, the vibration motors deliver localized cues to encourage muscle engagement and prompt postural adjustment. This non-invasive approach enhances user comfort and supports prolonged usage, facilitating effective postural correction without direct muscle stimulation.

For data processing and analysis, the project employs straightforward algorithms to assess muscle activation levels and spinal angle variations in real time. Processed data is transmitted to a user-friendly mobile application that visualizes treatment progress, helping users understand their posture and muscle engagement. The app's interface includes live readings, historical trends, and visual feedback to guide users in maintaining optimal posture, making the system intuitive and engaging.

A critical part of the project involved data collection and dataset management. High-quality EMG and gyroscope data were collected to establish baseline metrics for muscle activity and posture, allowing the system to track user progress effectively. Dataset handling protocols

ensured data accuracy and consistency, with data storage structured to enable real-time analysis and adaptive feedback.

Finally, the system is undergoing rigorous testing and validation to confirm its effectiveness in promoting postural correction and user comfort. Prototype testing includes assessments of system accuracy, hardware reliability, and ease of use. Usability sessions with target-age users provide feedback to refine the device's ergonomics and interaction design, ensuring the system is both effective and practical for everyday use. Clinical evaluations assess the system’s impact on muscle engagement and postural improvement, validating its potential as a non-invasive kyphosis treatment option.

2.2 Main Technical Content

The literature review involved an in-depth analysis of existing research on kyphosis treatment methods and wearable device technologies, focusing on EMG sensors, gyroscopic sensors, and vibration feedback mechanisms. Studies from reputable sources such as IEEE Xplore and Google Scholar highlighted limitations in traditional kyphosis treatments, such as bracing and physical therapy, which often lack real-time monitoring and adaptability. Insights from this research guided the design of a wearable system that enhances kyphosis management through continuous monitoring and personalized feedback.

Market research was conducted to identify suitable devices and sensors for kyphosis monitoring, emphasizing accuracy, comfort, ease of integration, durability, and cost-effectiveness. The final hardware setup integrates reliable sEMG sensors for muscle activity monitoring, a GY-521 MPU6050 3-Axis Analog Gyroscope for spinal posture tracking, and vibration motors for user feedback. Together, these components form a comprehensive hardware system capable of continuous data acquisition and real-time feedback.

The hardware configuration includes sEMG sensors strategically placed on both the left and right sides of the rhomboids, erector spinae, and trapezius muscle groups. This bilateral placement was chosen to capture symmetrical muscle activity data critical for postural assessments. However, electrode placement required careful planning, as positioning them on bony areas or too close to adjacent sensors would degrade signal quality. The large size of the electrodes further necessitated specific placement to prevent overlap, ensuring a consistent and high-quality signal path.

The GY-521 MPU6050 3-Axis Analog Gyroscope was selected to monitor spinal angles, providing critical data on postural orientation and movement patterns. This gyroscope was chosen due to its compact size, affordability, and reliable performance in wearable setups. While options such as the L3G4200D gyroscope offered higher precision, the MPU6050 was a cost-effective choice balancing accuracy and usability for kyphosis monitoring. Its integration enables real-time tracking of postural deviations, essential for immediate feedback.

The vibration feedback mechanism uses Micro DC Vibration Motor 1027 units, positioned close to the spine as advised by physicians, to provide targeted, non-invasive cues that encourage the user to adjust posture. Positioned near the bones, these motors deliver localized

feedback without interfering with muscle engagement, ensuring a comfortable experience for long-term use. This feedback system serves as a non-intrusive alternative to electrical stimulation, enhancing user comfort for sustained usage.

The microcontroller setup features an ESP-WROOM-32 ESP32 ESP-32S V1 Development Board integrated into the brace to handle initial data processing and communication. This versatile microcontroller supports Bluetooth communication and has sufficient processing capacity for managing real-time EMG and gyroscope data. It communicates with a Raspberry Pi 5 via Bluetooth, which handles more intensive data processing and storage. This architecture allows the ESP32 to manage data acquisition directly from the sensors while offloading processing tasks to the Raspberry Pi, optimizing real-time data handling and feedback performance.

The power management system, designed by me, was created to support the sensors, microcontroller, and feedback system throughout extended usage. Four 18650 lithium-ion batteries were selected for their high energy density and ability to provide stable power for continuous monitoring. To charge the batteries safely, a 4S 10A BMS PCM Battery Protection Board is used, providing protection against overcharge, over-discharge, and overheating. A 5V buck converter, which I designed specifically for this project, regulates the system's voltage, providing a consistent 5V output to power the microcontroller and other components. For user comfort, the battery pack was positioned at the lower part of the brace, balancing the brace's weight distribution and ensuring minimal interference with other hardware components.

Data collection involved acquiring high-quality EMG signals and gyroscope data, with sensor placement tailored to specific muscle groups and spinal angles. Maintaining precise placement was essential for clean, reliable data that supports real-time analysis and continuous monitoring of muscle activity and posture alignment.

Throughout the testing phase, initial bench tests confirmed reliable communication between the sensors, the ESP32 microcontroller, and the Raspberry Pi, ensuring stable data acquisition. Subsequent testing with volunteers wearing the device provided valuable feedback on comfort, sensor accuracy, and overall usability. This feedback informed refinements in sensor placement and wiring configuration, enhancing the device's usability and ensuring minimal interference with the signal.

The project's hardware design emphasizes sensor integration, robust power management, and effective feedback systems to deliver a wearable, user-centered solution for kyphosis management. Careful selection and positioning of components created a practical and comfortable framework for posture monitoring and muscle engagement, supporting the goal of long-term postural correction.

2.2.1 Signal Processing and Data Handling

For signal processing, the project used several core libraries from NeuroKit. This toolkit, tailored for physiological signal analysis, provided essential functions for smoothing, filtering, and feature extraction, demonstrated by the following examples:

1. Smoothing: NeuroKit's `nk.signal_smooth` function was used to apply a moving average to smooth the EMG signal, which reduced short-term fluctuations and noise.

```
import neurokit2 as nk

emg_smoothed = nk.signal_smooth(emg_signal, method='moving_average',
window_size=3)
```

2. Noise Filtering: NeuroKit's `nk.signal_filter` function was utilized to filter out noise from the EMG signal. For instance, a bandpass filter was applied to retain only relevant frequency components, and a notch filter was used to eliminate power line interference (50/60 Hz).

```
emg_filtered = nk.signal_filter(emg_signal, lowcut=20, highcut=500,
method="butterworth")

emg_filtered = nk.signal_filter(emg_filtered, method="notch", notch=50)
```

3. Feature Extraction: NeuroKit's `nk.emg_amplitude` and `nk.emg_rms` functions were used to analyze the EMG signal. These functions allowed for the extraction of key features like the rectified signal (absolute values) and the RMS, providing insights into muscle activation levels.

```
emg_rectified = nk.emg_amplitude(emg_filtered, method="absolute")

emg_rms = nk.emg_rms(emg_rectified, window_size=50)
```

These NeuroKit libraries enabled efficient processing and interpretation of EMG data, providing insights into muscle activity trends over time. Combined with data from the gyroscope, the signal processing techniques enhanced the system's ability to detect and respond to postural imbalances in real-time.

2.2.2 Power Management System

To ensure the system's functionality and reliability, I developed a robust power management solution capable of supporting the sensors, microcontrollers, feedback mechanisms, and processing units needed for real-time kyphosis monitoring and correction. The core components of the power management system include Samsung SDI INR18650-35E lithium-ion batteries, a 4S 10A Battery Management System (BMS) for safety, and a custom-designed buck converter.

1. Battery Pack:
    - I selected Samsung SDI INR18650-35E lithium-ion batteries due to their high energy density and reliable performance, which are essential for extended monitoring sessions. These batteries provide consistent power output and longevity, allowing the system to operate continuously without frequent recharging.
    - The battery pack was designed to operate at a stable voltage suitable for wearable applications. The pack configuration includes four 18650 batteries arranged in series, delivering the necessary power while maintaining compactness.
2. Battery Management System (BMS):
    - To ensure the safety and stability of the battery pack, I incorporated a 4S 10A Battery Management System (BMS). This BMS module provides multiple protections, including overcharge, over-discharge, and thermal management, essential for user safety and the longevity of the power system.
    - The BMS also plays a critical role in balancing the cells within the battery pack, ensuring each cell maintains optimal charge levels to avoid uneven discharge, which could otherwise impact performance and battery life.
3. Buck Converter with Voltage Regulation:
    - After testing several prototypes, I finalized a buck converter design using an LM7805 voltage regulator with two 22µF capacitors to maintain a stable 5V output, tailored for the system's requirements.

- The LM7805 regulator provides the precise 5V output required by the microcontroller, sensors, and feedback system, ensuring that all components receive consistent and clean power without fluctuations.
- The 22µF capacitors were strategically added to stabilize the output, smoothing any voltage spikes that could interfere with sensor accuracy and microcontroller performance.

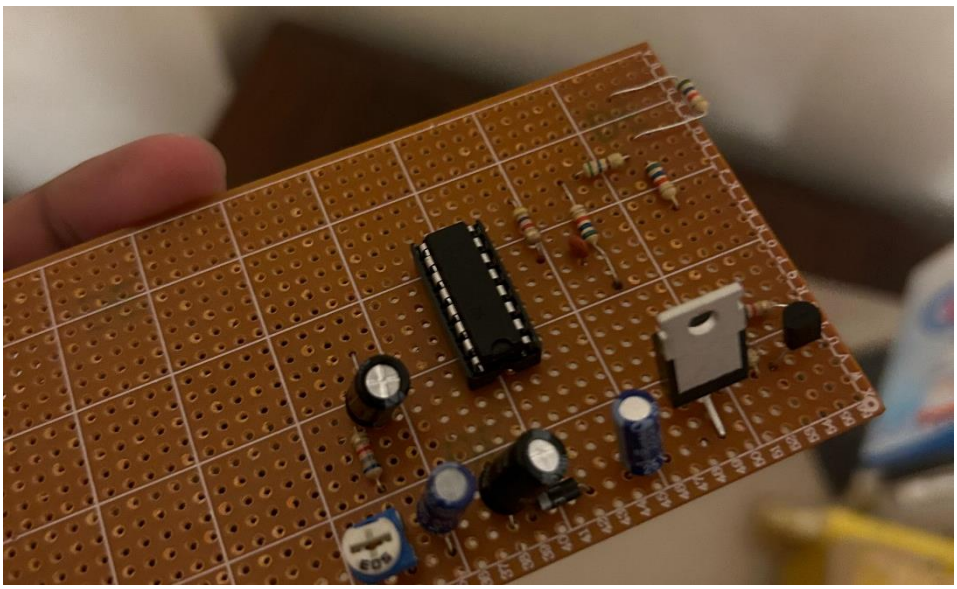

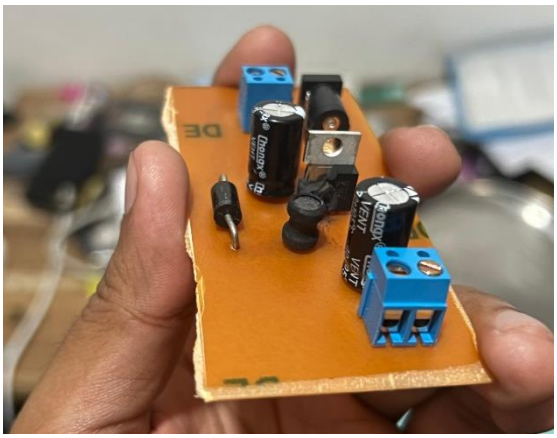

Figure 2. 1 : Power Supply Prototype

4. Positioning and Prototyping:
    - The power management system underwent several design iterations, with prototypes created and tested to identify the most space-efficient and user-friendly configuration. During initial testing, battery positioning and component arrangement were assessed for both comfort and functionality.
    - Early prototypes positioned the batteries in different areas of the brace, but after testing, the final design positioned the battery pack at the lower part of

the brace. This location was selected to balance the device's weight and minimize any discomfort to the user, optimizing for long-term wearability.

- The final configuration takes into account both space constraints and user comfort, with the battery pack and power components housed compactly to avoid interference with sensor and feedback functions.

This power management system design provides the stability, safety, and usability needed for wearable posture correction, supporting the system's continuous monitoring and feedback capabilities. By iterating on prototypes, I was able to refine the design to meet both functional and ergonomic requirements, ensuring that the system operates effectively while remaining comfortable and user-friendly for the wearer.

2.2.3 Hardware Design

To create a wearable system that effectively monitors kyphotic posture and provides real-time corrective feedback, I designed and refined a robust hardware setup. The design involved several prototypes, iterative testing, and close integration of sensors, microcontrollers, and communication modules. Following multiple design iterations and testing phases, a final PCB layout was developed to optimize functionality, space efficiency, and ease of use.

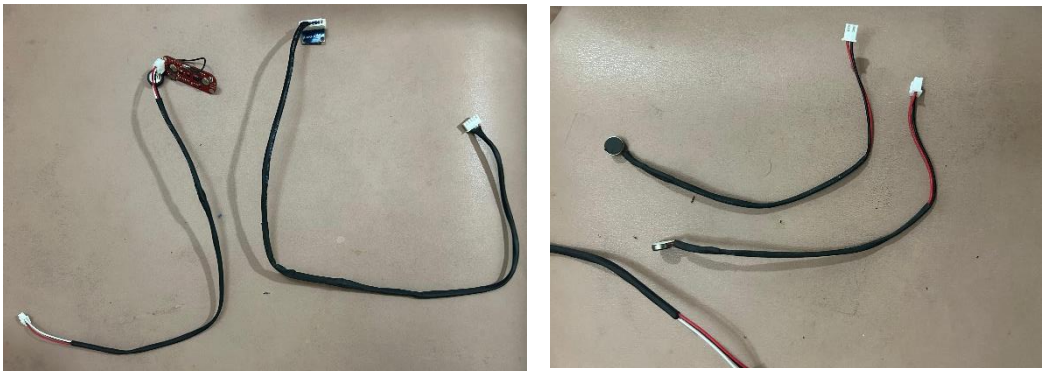

Figure 2. 2: Sensors and Vibration Motors

Sensor and Microcontroller Integration:

- MyoWare Muscle Sensors were strategically positioned on both the left and right sides of specific muscle groups (rhomboids, erector spinae, and trapezius) to capture symmetrical muscle activation data. This placement was optimized to ensure clear, reliable EMG signals that accurately reflect muscle engagement critical for postural correction.

- The GY-521 MPU6050 gyroscope was integrated to track spinal alignment and movement patterns. After initial testing, the gyroscope was calibrated for precise angle measurement, ensuring accurate detection of postural deviations and allowing the system to identify kyphotic misalignments in real-time.
- Bluetooth communication between the ESP32 microcontroller and the Raspberry Pi 5 was established to enable seamless wireless data transfer. This setup allows the ESP32 to handle initial data acquisition and transmit it to the Raspberry Pi for processing, where the Raspberry Pi analyzes and interprets the data, providing real-time feedback based on postural changes.

2. Prototyping and PCB Development:
    - The hardware design process involved several iterations of prototype PCBs to test sensor placements, component layout, and power distribution. Early prototypes were tested for signal quality, power efficiency, and user comfort, with adjustments made based on these insights.

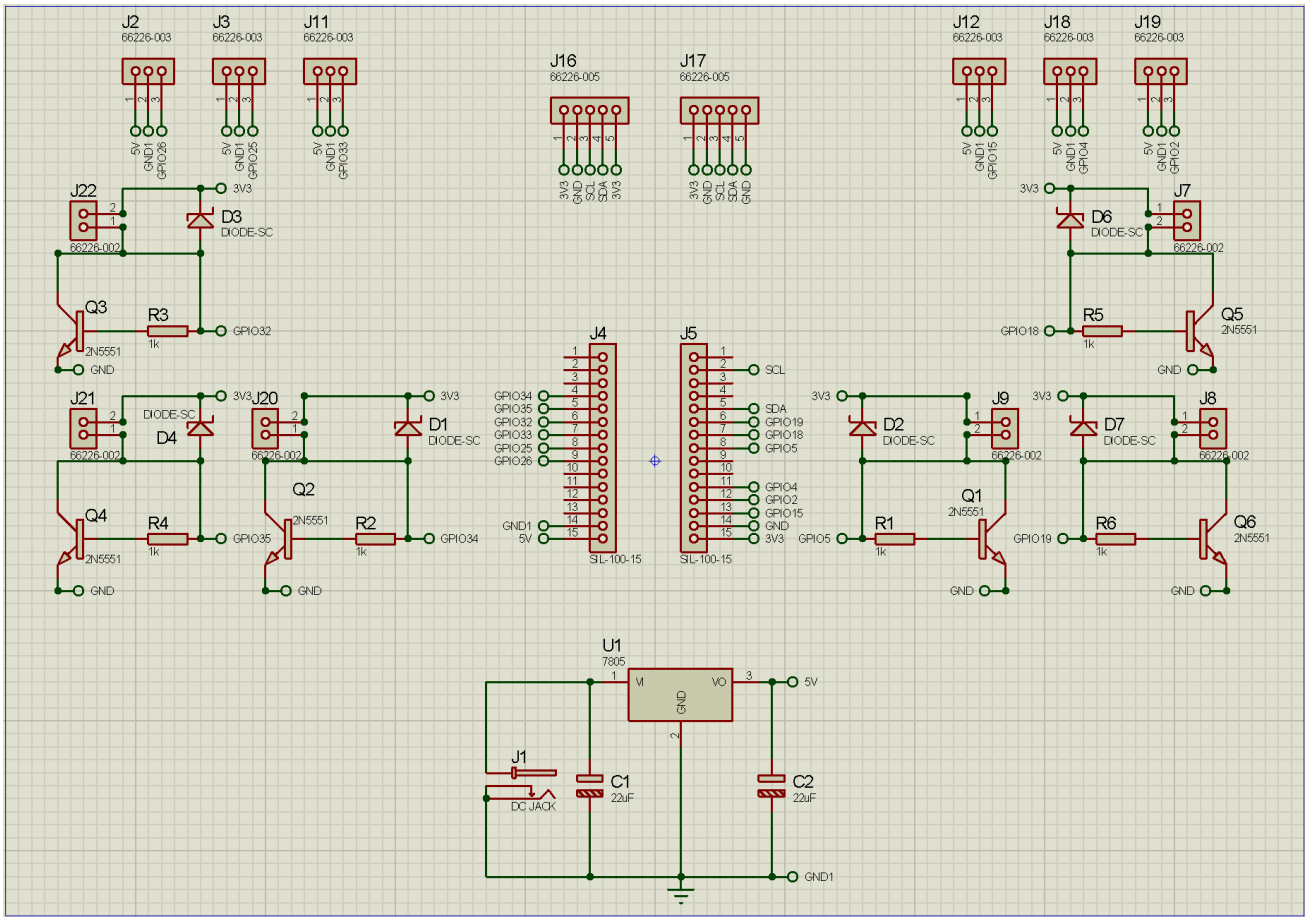

Figure 2. 3: Schematic Diagram

- Final PCB Design: After refining initial prototypes, a final PCB layout was developed to integrate all key components, ensuring efficient signal paths, power stability, and a compact design that fits comfortably within the brace. The final PCB includes optimized traces for EMG signals, power regulation circuits, and secure connections for Bluetooth communication, enhancing the system's overall durability and reliability.

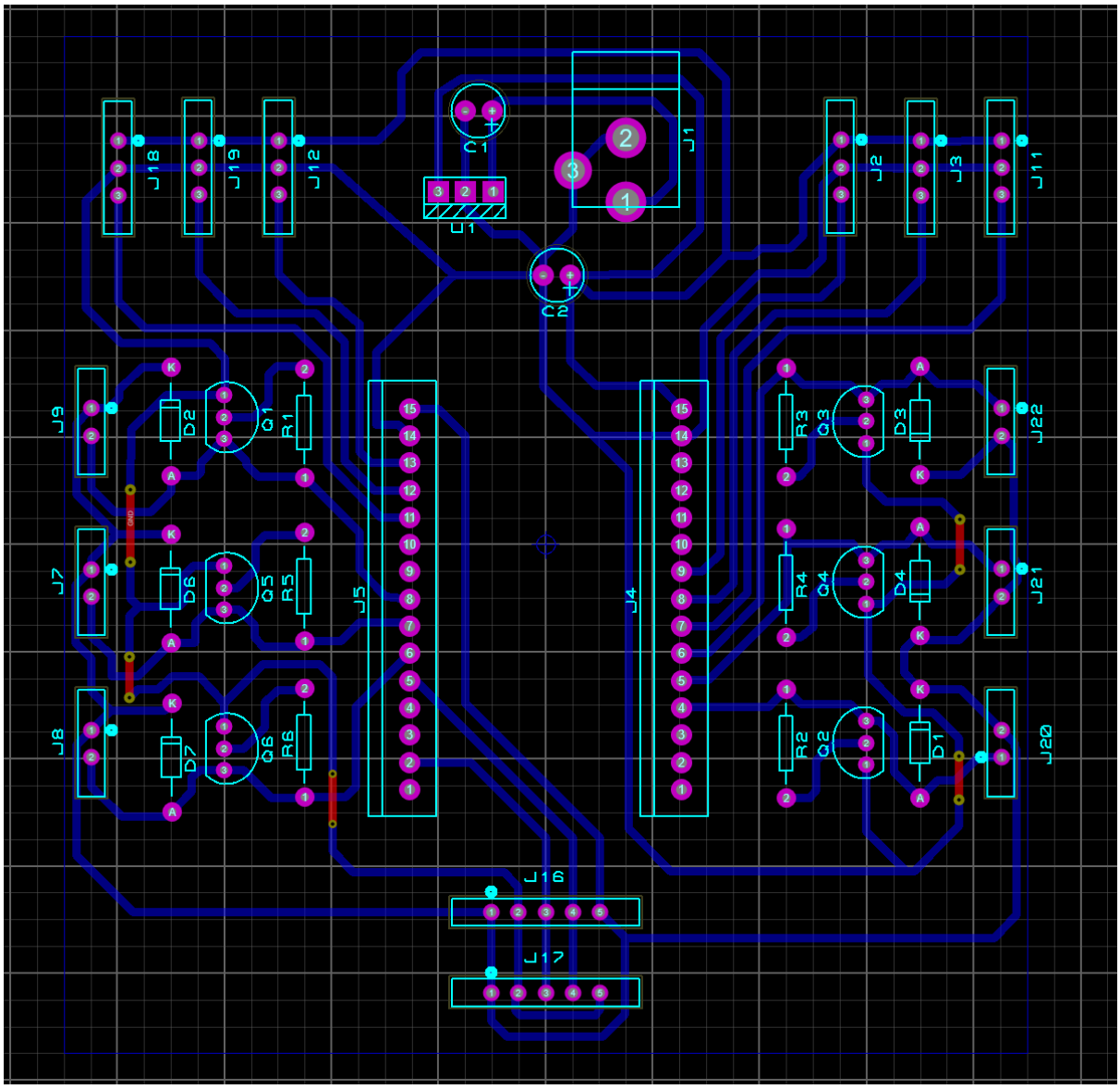

Figure 0.1: PCB Layout

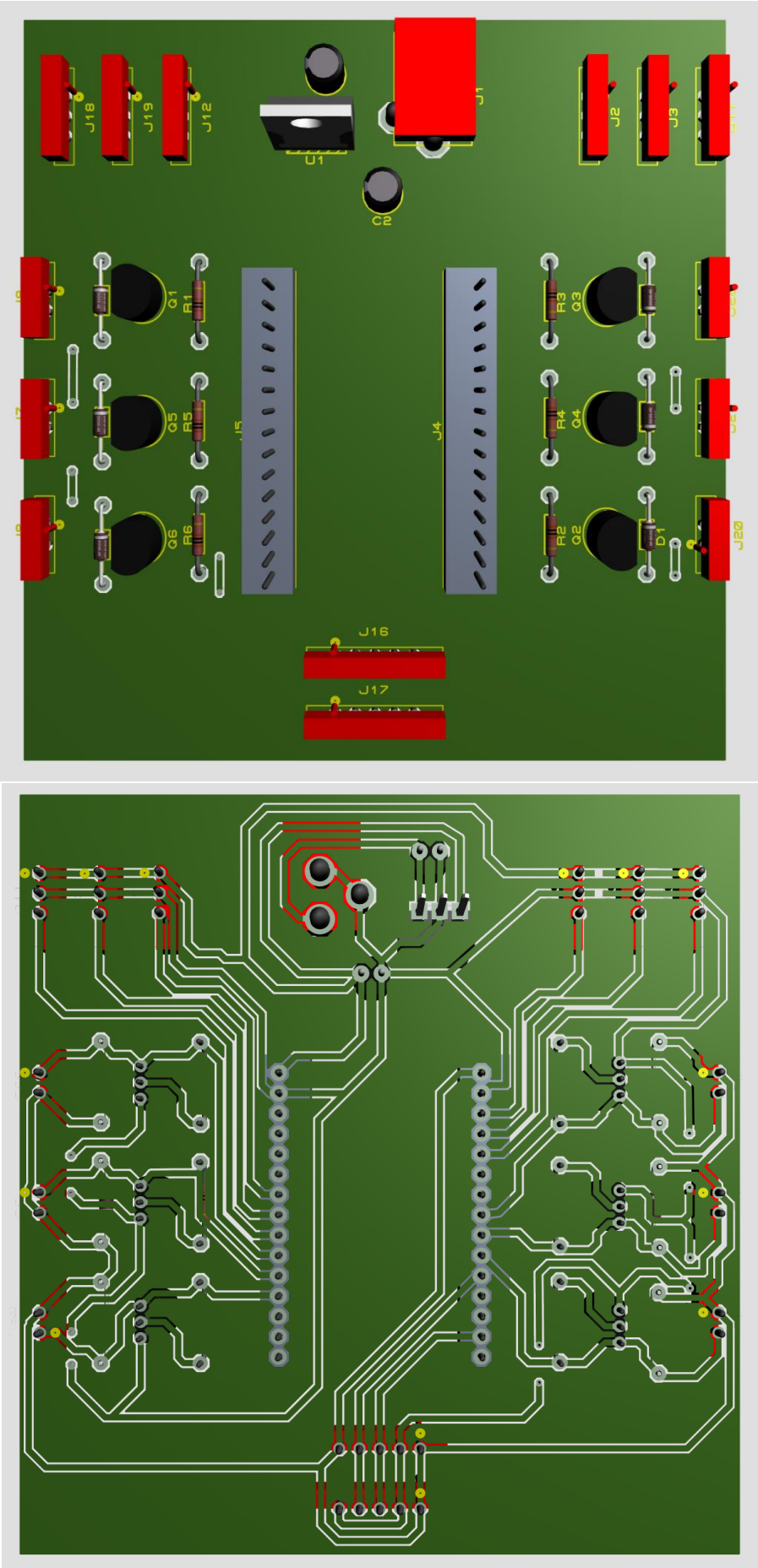

Figure 2. 5: 3D Layout – Top & bottom view

3. Vibration Motor Placement and Control:
    - The Micro DC Vibration Motors were positioned close to the spine, in areas recommended by physicians, to deliver precise, non-invasive feedback that encourages corrective posture adjustments. Proper placement was essential to deliver effective feedback without causing discomfort, making it important to position the motors where vibrations would be felt distinctly without interfering with muscle engagement.
    - Supporting components, including 2N5551 transistors, 1N5822 diodes, and 1kΩ resistors, were incorporated into the PCB design to control the vibration motors effectively. These components allow the microcontroller to manage power to the motors, ensuring that feedback is delivered as intended.
4. Calibration and Testing:
    - Gyroscope Calibration: The GY-521 MPU6050 gyroscope was carefully calibrated to measure spinal alignment angles accurately, with adjustments made to account for any sensor drift. This calibration ensures that postural deviations are detected with precision, providing accurate input for the feedback system.
    - EMG Sensor Placement Optimization: EMG sensor placement was refined through testing to avoid interference from bones and other structures. By iterating on placement and consulting with physicians, the final setup maximizes signal clarity, allowing for consistent muscle activity monitoring across different postural positions.
    - System Testing: Each component and connection was rigorously tested to ensure seamless operation, stable power flow, and minimal signal interference. Prototype testing with users confirmed comfort, sensor accuracy, and the effectiveness of the feedback system, leading to further refinements in both sensor placement and PCB layout.
5. Final Assembly:
    - The final hardware design integrates the optimized PCB, sensors, gyroscope, and power management system into the wearable brace. Each component was positioned to balance usability with comfort, ensuring the device could be worn for extended periods without causing fatigue or discomfort. The compact PCB design and efficient layout minimize bulk, making the system both functional and unobtrusive.

This hardware design, achieved through multiple prototyping stages and detailed testing, balances accuracy, user comfort, and compactness. The finalized PCB layout, sensor calibration, and optimized communication pathways support reliable data collection and feedback, enabling the system to deliver precise, user-friendly postural correction.

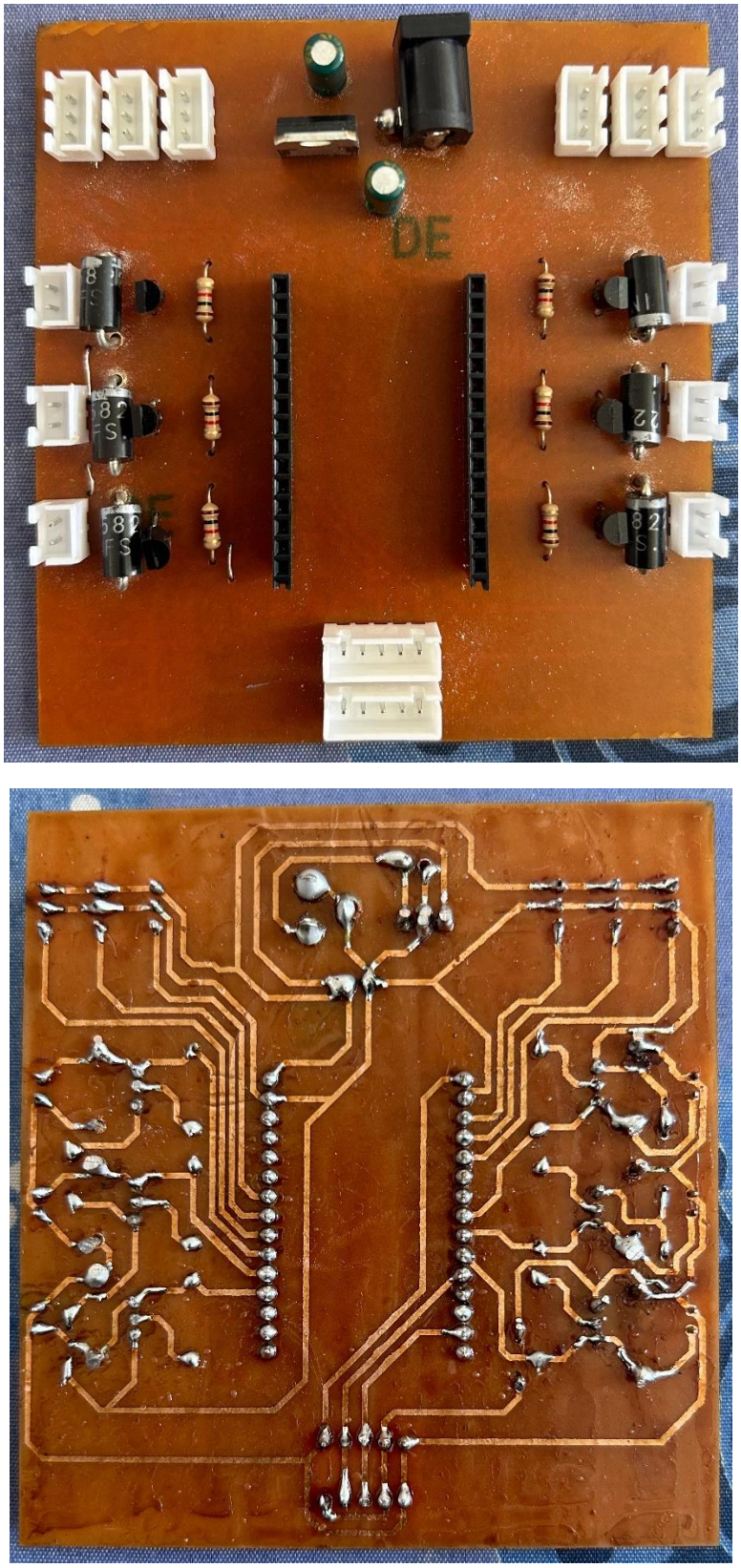

Figure 2. 6: Final PCB

2.2.4 Feedback Mechanism Design

A key aspect of this project was designing an effective, non-intrusive feedback mechanism to assist users in maintaining proper posture. After testing multiple configurations, a vibration-based feedback system was chosen, utilizing Micro DC Vibration Motors to deliver subtle, targeted cues when posture deviations were detected. This system underwent several prototype iterations before arriving at a final design, which included the creation of a dedicated PCB for efficient power control and component integration.

1. Vibration Motor Selection and Placement:
    - Micro DC Vibration Motors were selected for their compact form factor and suitability for wearable applications. These motors provide just the right amount of feedback intensity to alert the user without causing discomfort, making them ideal for continuous use in a posture correction device.
    - Working with physician recommendations, the motors were strategically placed near the spine to deliver targeted vibration cues. Placement was refined through testing to ensure the feedback would be felt distinctly by the user, yet remain comfortable and non-intrusive, effectively encouraging corrective action without interrupting daily activities.
2. Prototyping and PCB Development:

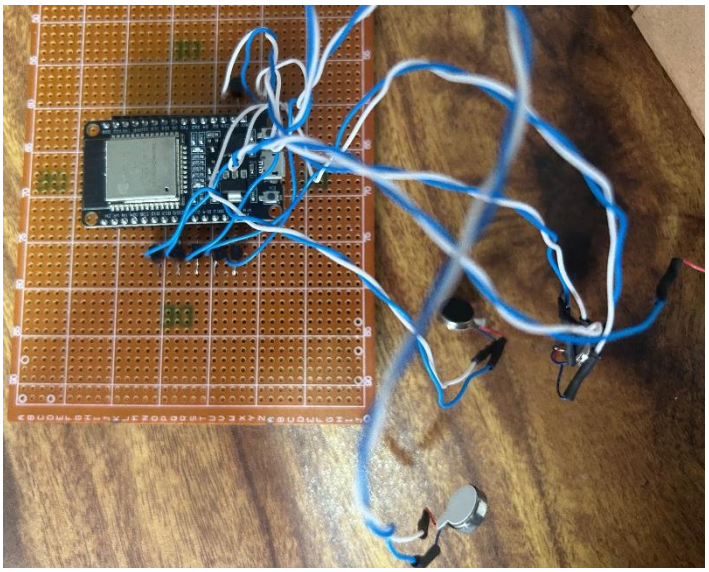

Figure 2. 7: Vibration Motors Prototype

    - Several prototypes were developed to test different motor configurations and component placements for optimized performance and comfort. Early prototypes explored various vibration intensities and placements to determine the ideal feedback settings for posture correction.

- After initial testing, a dedicated PCB layout was designed to integrate the feedback components, ensuring efficient power control and effective motor operation. This PCB design centralized the motor control circuit, minimizing wire clutter, improving reliability, and creating a compact, wearable form.

3. Power Control and Circuit Protection:

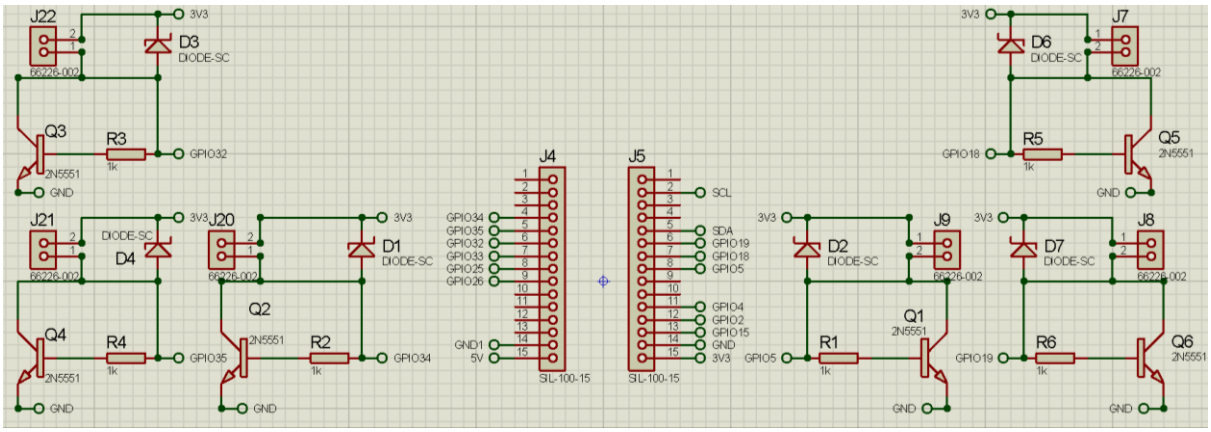

Figure 2. 8: Schematic diagram for Vibration Motors

- To manage the power requirements of the vibration motors, additional components were incorporated, including:
  - 2N5551 Transistors: Used to switch the motors on and off based on signals from the microcontroller, allowing precise control over when feedback is delivered.
  - 1N5822 Diodes: Schottky diodes that protect the circuit by preventing back EMF generated by the motors from damaging other sensitive components.
  - 1kΩ Resistors: Employed to limit current flow, ensuring that each motor receives stable power without drawing excess current from the system.
- These components were arranged on the final PCB to provide centralized power management and protection, with each element carefully positioned to enhance performance and longevity.

4. Final PCB Design:
   - The final PCB for the feedback mechanism was created after testing multiple prototypes, each iteration improving upon power distribution, motor control, and ease of integration. The PCB design consolidated all feedback-related components, including transistors, diodes, and resistors, in a compact layout that minimized interference with other systems in the brace.

- This PCB layout not only streamlined the circuitry but also improved the overall durability and reliability of the feedback mechanism. By housing the entire vibration motor control system on a single board, the design reduced wire complexity, facilitating easier assembly and maintenance while ensuring efficient power distribution.

5. System Testing and Optimization:
    - The feedback mechanism underwent rigorous testing to confirm the motors' effectiveness in providing clear yet comfortable cues. Different vibration patterns and intensities were tested to identify the optimal settings for posture correction.
    - User feedback was gathered to refine motor placement and intensity further, ensuring the device delivered corrective cues in a way that was intuitive, comfortable, and conducive to long-term wear.

The final feedback mechanism design combines careful motor placement with precise power control, resulting in an effective, user-friendly solution for posture correction. The dedicated PCB for the feedback system ensures that all components operate seamlessly, providing reliable feedback cues that help users improve posture while maintaining comfort and ease of use. This integrated feedback mechanism serves as a critical component of the overall posture correction system, offering non-intrusive guidance that encourages healthy postural habits over time.

2.2.5 Testing and Dataset Collection

Multiple rounds of testing were conducted on initial prototypes to assess sensor accuracy, user comfort, and overall functionality. This iterative testing process focused on refining the design for reliable, responsive posture correction while gathering comprehensive data for calibration.

1. Prototype Testing:
    - Each prototype underwent extensive testing to evaluate core functionalities, including sensor accuracy, feedback response, and overall system stability.
    - Bluetooth communication between the ESP32 and Raspberry Pi was tested, along with power distribution from the battery pack and the accuracy of EMG and gyroscope readings.
    - Feedback from these tests informed adjustments in component placement, power control, and vibration intensity, enhancing user comfort and the effectiveness of feedback cues.
2. Dataset Collection:
    - To ensure accurate calibration, a structured data collection session was conducted with a sample of five healthy adult males, aged 23-25. This demographic provided consistent baseline data for analyzing muscle activation and posture in similar physical profiles.
    - EMG data was collected at five specific angles—45°, 55°, 65°, 75°, and 90°—to capture a range of muscle activation patterns across various postures. For each angle, data was recorded for 5 minutes per angle, with a 2-minute rest interval between sessions to prevent muscle fatigue and maintain data quality.

Figure 2. 9: Dataset Collection

    - This dataset of EMG signals and spinal angles established a reference for identifying postural deviations and enabled precise calibration for detecting posture misalignments.
3. Data Analysis and Algorithm Refinement:
    - The collected dataset was analyzed to refine signal processing algorithms, improving the system's sensitivity to subtle postural changes. NeuroKit functions were utilized to filter noise, extract features, and calculate root mean square (RMS) values of the EMG data, enhancing signal clarity and accuracy.
    - Calibration adjustments were made to optimize feedback response thresholds, ensuring the vibration motors activate only when significant postural deviations are detected. This calibration reduces false cues, making feedback both precise and reliable.
    - The system was fine-tuned to differentiate between postural angles accurately, optimizing the responsiveness of the feedback mechanism and ensuring it provides timely, appropriate cues.
4. User Feedback and Iterative Refinement:
    - User feedback was gathered on comfort, ease of use, and the effectiveness of feedback cues. This feedback guided iterative refinements, including adjustments to motor placement and vibration intensity, ensuring that cues are subtle yet effective for posture correction.
    - Refinements were made to enhance the comfort and usability of the device for long-term wear, ensuring that feedback remains non-intrusive while promoting consistent postural improvements.

The combined testing and dataset collection process was essential for creating a system that is both functional and user-friendly. By calibrating based on real data and refining the design through user feedback, the device achieves accurate, personalized feedback that enhances overall posture correction effectiveness.

2.3 Components used

This project aims to develop an advanced system for monitoring and correcting kyphotic posture by integrating muscle activity sensors, precise gyroscopic measurement, real-time feedback, and robust processing capabilities. The core components include the MyoWare Muscle Sensor, GY-521 MPU6050 3-Axis Gyroscope, ESP32 microcontroller, Raspberry Pi 5, Micro DC Vibration Motors, and a custom-designed power management system. Each component was chosen for its technical strengths and compatibility with the project's goals.

2.3.1 MyoWare Muscle Sensor

Figure 2. 10: MyoWare Muscle Sensor

Technical Specifications:

- Voltage Supply: 3.3V - 5V
- Output: 0V - VCC analogue signal
- Filtering: On-board filtering to remove noise
- Electrode Connectors: Snap connectors for standard EMG electrodes
- Dimensions: Small form factor

The MyoWare Muscle Sensor is used to measure the electrical activity of muscles, providing analog signals that reflect muscle engagement and activation patterns. This sensor's built-in noise filtering and easy electrode connectivity allow for accurate and reliable muscle data capture, which is crucial for identifying patterns associated with kyphotic posture. These sensors are strategically placed on both left and right sides of the rhomboids, erector spinae, and trapezius muscle groups to capture symmetrical muscle activity for effective postural assessments.

2.3.2 GY-521 MPU6050 Gyroscope

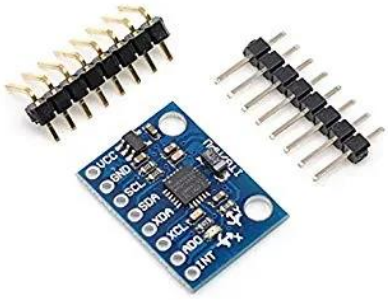

Figure 2. 11: GY-521 MPU6050 Gyroscope

Technical Specifications:

- Axes: 3-axis accelerometer and 3-axis gyroscope
- Resolution: 16-bit
- Data Rate: Up to 1kHz output data rate
- Operating Voltage: 3.3V - 5V
- Communication Interface: I2C

The MPU6050 is a 3-axis gyroscope and accelerometer sensor used to monitor spinal angles, providing critical data on postural orientation and movement patterns. This gyroscope was chosen for its compact size and reliable performance in wearable applications. Compared to alternatives like the L3G4200D gyroscope, which offers slightly higher precision but at a greater cost, the MPU6050 is a cost-effective solution that balances accuracy and usability for kyphosis monitoring. Combined with EMG data, gyroscope data helps detect postural misalignments, enhancing feedback precision.

2.3.3 ESP32 Microcontroller

Figure 2. 12: ESP32 Microcontroller

Technical Specifications:

- Processor: Dual-core Tensilica LX6 @ 240MHz
- Memory: 520KB SRAM
- Connectivity: Wi-Fi, Bluetooth
- GPIO Pins: 34, including I2C, SPI, UART, PWM, and ADC
- Power Supply: 3.0V - 3.6V input voltage

The ESP32 microcontroller enables wireless communication between sensors and the Raspberry Pi 5. This microcontroller collects data from the MyoWare sensors and MPU6050 gyroscope and transmits it to the Raspberry Pi for processing and storage. Its Wi-Fi and Bluetooth capabilities streamline data transmission, making it ideal for real-time monitoring and feedback. Additionally, the ESP32's processing power and memory support efficient data handling, which is essential for responsive posture correction.

2.3.4 Raspberry Pi 5

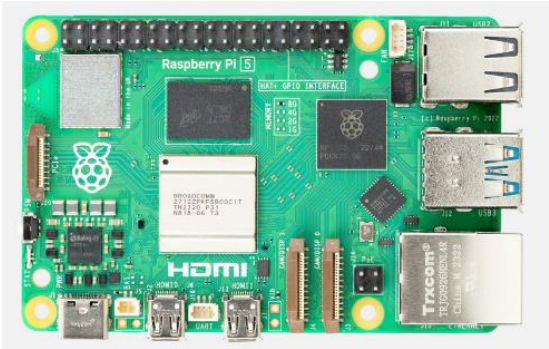

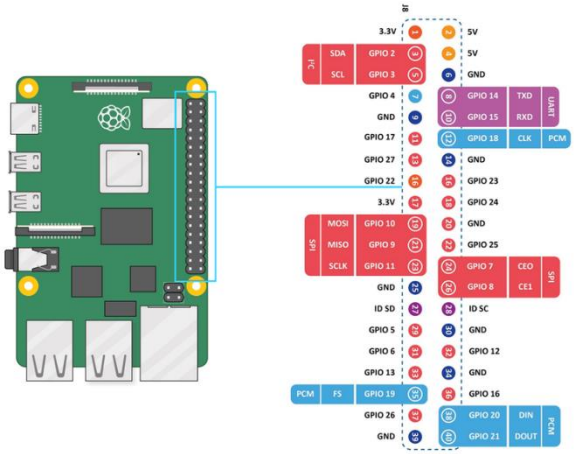

Figure 2. 13: Raspberry Pi 5 Pinout diagram

Technical Specifications:

- Processor: Quad-core ARM Cortex-A76 @ 2.0GHz
- Memory: Options of 4GB or 8GB LPDDR4-3200 SDRAM
- Storage: MicroSD slot for storage expansion
- Connectivity: USB 3.0, USB 2.0, Gigabit Ethernet, Bluetooth 5.0, Wi-Fi 6
- Video Output: Dual micro-HDMI ports supporting up to 4K resolution
- GPIO Pins: 40-pin GPIO header
- Operating System: Supports various Linux distributions, including Raspbian OS

The final implementation leverages the Raspberry Pi 5, a powerful single-board computer with a quad-core ARM Cortex-A76 processor, ample RAM, and extensive connectivity options, including USB 3.0, Gigabit Ethernet, and Wi-Fi 6. The Raspberry Pi 5's dual 4K HDMI outputs and support for Raspbian OS enable advanced data processing and user interface development, making it the backbone of the final posture correction system.

2.3.5 ***Micro DC Vibration Motor 1027 and Supporting Components***

Figure 2. 14: Micro DC Vibration Motor

Technical Specifications of Vibration Motor:

- Voltage: 3.0V
- Current: 85mA
- Vibration Frequency: 9000 RPM
- Dimensions: Small form factor, easily integrated into wearable systems

To power the Micro DC Vibration Motor 1027, additional components were included to ensure smooth operation and control. These include:

- 2N5551 Transistor: Used as a switching component to control the motor's power and activation from the microcontroller.
- 1N5822 Diode: A Schottky diode that prevents back EMF generated by the motor from damaging other components in the circuit.
- 1kΩ Resistors: Used to limit the current and protect the transistor and microcontroller from excessive current.

Positioned near the spine as advised by physicians, these vibration motors provide non-invasive feedback cues to users, encouraging them to correct posture based on detected misalignments. This feedback mechanism offers an intuitive and comfortable way to support posture correction without the need for invasive measures

2.3.6 Power Management System (Battery Pack, BMS, and Buck Converter)

Battery Pack Specifications:

Figure 2. 15: 18650 Lithium-Ion Batteries

Battery Type: 4 x 18650 Lithium-Ion Batteries

- Capacity: 3500mAh

BMS Specifications:

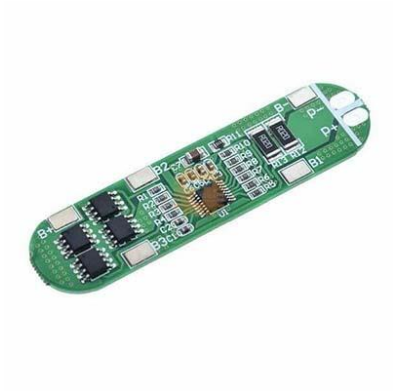

Figure 2. 16: 4S 10A Battery Protection Board

- Protection: 4S 10A Battery Protection Board
- Features: Protection against overcharge, over-discharge, and overheating

Buck Converter Specifications:

Figure 2. 17: LM7805 IC and capacitor

- Voltage Regulator: LM7805 with heatsinks to prevent overheating
- Capacitors: Two 22µF capacitors for stable voltage output

The power management system, designed by me, is critical to providing efficient and safe power to all project components. Four 18650 batteries, known for high energy density and long battery life, were used to ensure the system can operate continuously over extended periods. The Battery Management System (BMS) safeguards against electrical faults, while the buck converter, using the LM7805 voltage regulator with heatsinks, maintains a steady 5V output for the system. Two 22µF capacitors are added to the buck converter circuit to stabilize the output voltage, ensuring reliable operation for all components. Positioned at the lower part of the brace, this battery pack offers user comfort and optimal weight distribution.

3. RESULTS

3.1 Signal Processing and Data Handling

The test results demonstrate the progressive refinement of EMG signals through each stage of signal processing. Initially, each sensor captures a raw EMG signal containing essential muscle activity data but also significant noise from power line interference, movement artifacts, and environmental factors. This raw data, with its high variability, makes it challenging to isolate clear muscle activation patterns.

To address this, a smoothing filter is first applied using a moving average technique, which reduces short-term fluctuations and random noise. This step reveals underlying trends in muscle activity, though some residual noise remains due to persistent external interference.

The final processing stage involves applying a Kalman filter to the smoothed signal. The Kalman filter further refines the signal, minimizing noise while preserving meaningful muscle activity patterns. The result is a clean, stable signal, ready for feature extraction and posture analysis, with distinct peaks representing muscle contractions.

The transformation from raw to smoothed, and then to Kalman-filtered signals, demonstrates the effectiveness of each processing step. These refinements enable the posture correction system to accurately detect muscle engagement and postural deviations, ensuring that feedback is both precise and timely. This rigorous signal processing is crucial for the system's ability to deliver effective, real-time posture correction.

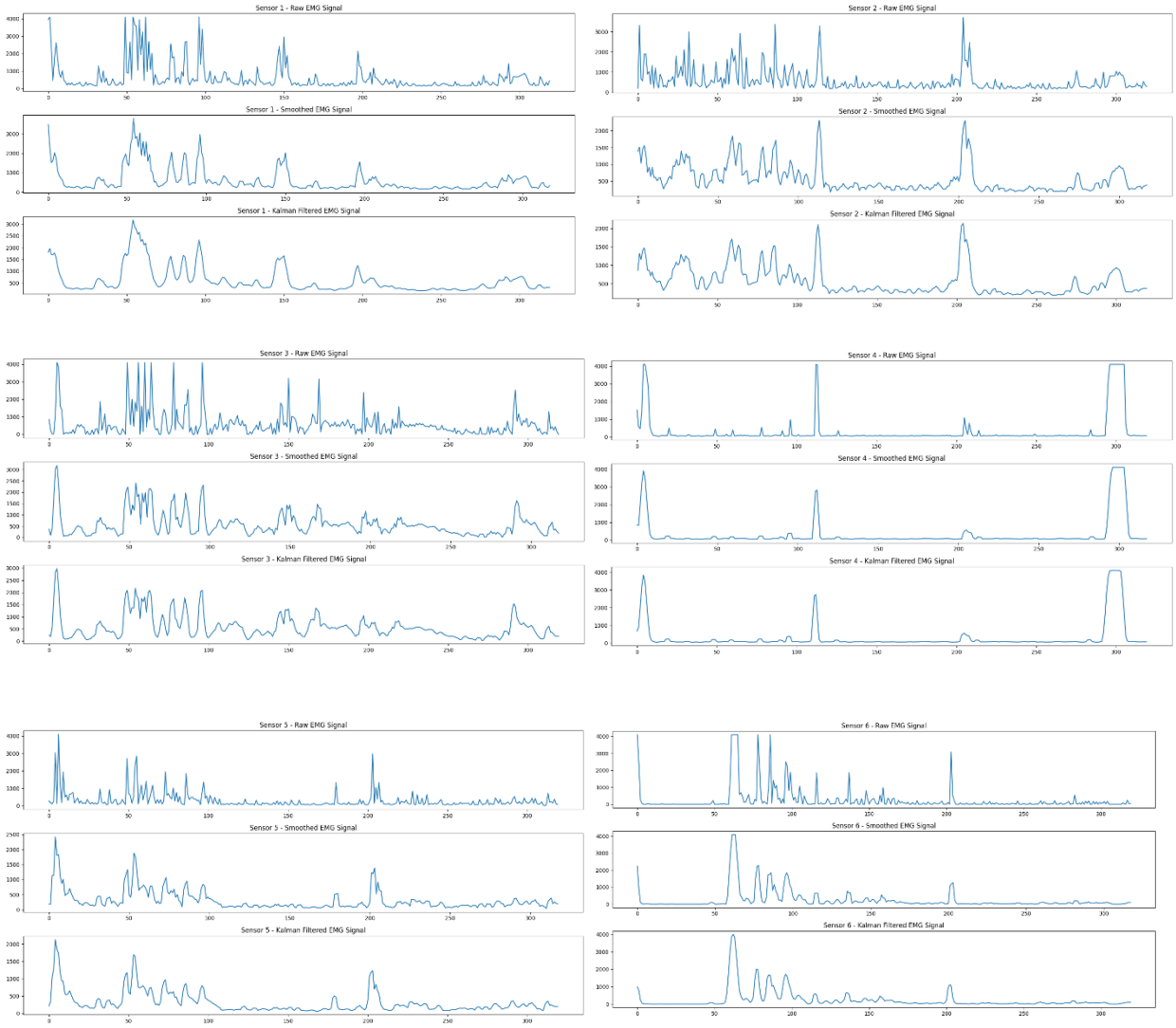

Figure 3. 1: Processed signals from all 6 sensors

3.2 Power Management System

The power management system was evaluated to verify its ability to deliver stable and reliable power to the various components of the kyphosis monitoring and correction system. Testing revealed that the Battery Management System (BMS) maintains a consistent output of 13.30V, indicating that it can provide a steady voltage to the buck converter and other components, even when all sensors, microcontrollers, and feedback mechanisms are active. This stable output from the BMS is essential for ensuring continuous operation and dependable performance.

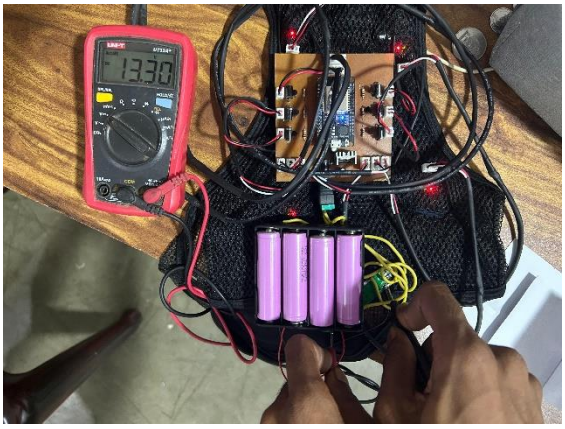

Figure 3. 2: Output from BMS

The buck converter, designed to step down the BMS voltage to a regulated 5V output for the system's sensors and controllers, performs reliably under normal load conditions, supplying the necessary 5V. However, under full load conditions—when the system's demand peaks due to simultaneous activity across components—the buck converter output drops to approximately 3V. This output drop highlights the converter's load limit and indicates the maximum capacity of the current power configuration. This information is valuable for potential future enhancements, where adjustments to the power distribution or the use of higher-capacity components could improve performance under high-demand conditions.

Figure 3. 3:: Input to the system

The voltage readings from the BMS and buck converter illustrate the stability and capacity of the power management system under different operational loads. While the system maintains the required power output in typical usage scenarios, the observed drop under full load conditions provides insights for refining the design to better accommodate peak power demands.

3.3 Hardware and Feedback Mechanism Design

The hardware and feedback mechanism testing focused on ensuring reliable performance, effective feedback delivery, and user comfort. Iterative testing allowed for the refinement of functionality, component layout, and overall wearability.

1. Sensor and Microcontroller Integration:

- Extensive testing confirmed the accuracy of the MyoWare Muscle Sensors and the GY-521 MPU6050 gyroscope in capturing essential muscle activity and spinal alignment data. EMG signals displayed consistent and clear readings across various muscle sites, and the gyroscope reliably tracked postural alignment with minimal error, essential for accurate posture monitoring.

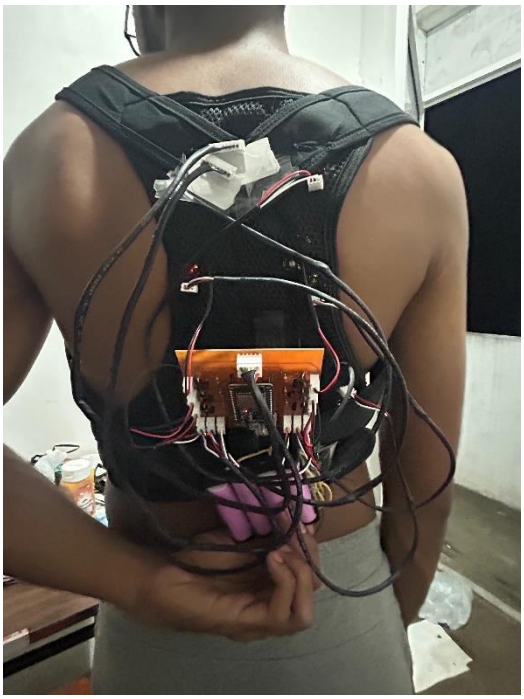

Figure 3. 4: User testing of Brace

2. Vibration Motor Placement and Feedback Effectiveness:

- The placement of Micro DC Vibration Motors was carefully optimized based on iterative testing and user feedback. Positioned near the spine, the motors provided distinct yet comfortable feedback cues, effectively prompting users to correct posture without causing discomfort.
- Testing confirmed that the vibration intensity was suitable for delivering clear cues, enhancing the system's corrective effectiveness while remaining comfortable for extended use.

Figure 3. 5: Inner view

3. PCB Design and Durability:
    - The final PCB layout integrated key components efficiently, reducing wire clutter and enhancing the durability of the system. Multiple testing cycles demonstrated that the PCB reliably supported consistent power flow to each component without interference across the EMG, gyroscope, and feedback paths.

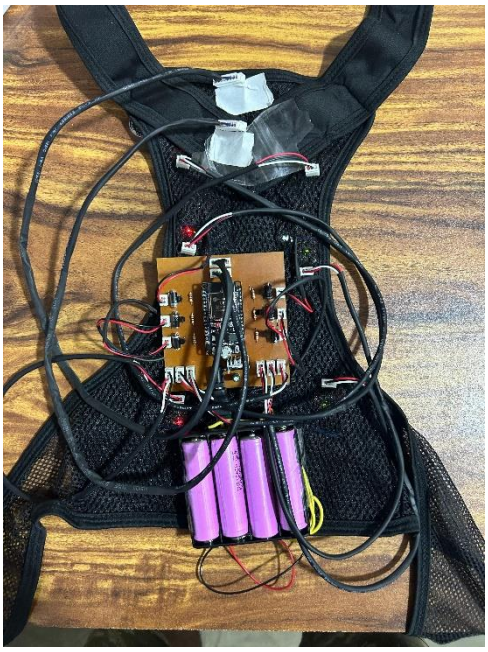

Figure 3. 6: Outer view

4. User Comfort and Wearability:
    - Extended user testing confirmed high comfort levels, with positive feedback on the balance of weight and ease of use. The refined design, incorporating optimized motor placement and compact integration of power and feedback components, provided an unobtrusive solution suitable for long-term wear.

3.4 Dataset Acquisition Output

The dataset acquisition process enabled real-time visualization of EMG sensor data from multiple muscle sites, providing valuable insights into muscle activation patterns across different postural angles. The output from this code generates a live plot of EMG readings, collected from six specific muscle locations: Top Right, Top Left, Middle Right, Middle Left, Bottom Right, and Bottom Left.

- EMG Sensor Data: The plot displays EMG values over time for each of the six muscle sites, capturing muscle activity on both the right and left sides of the back.

These readings help establish baseline muscle engagement levels during various postures, which are essential for accurate calibration of the posture correction system.

The real-time plotting capability enabled continuous monitoring of EMG signals, allowing for the assessment of data quality and consistency throughout the acquisition sessions. This collected dataset served as the foundation for refining feedback mechanisms and calibrating the system's response to postural changes, ensuring that the system delivers reliable and precise correction cues.

Figure 3. 8: Raw EMG Data for 45°

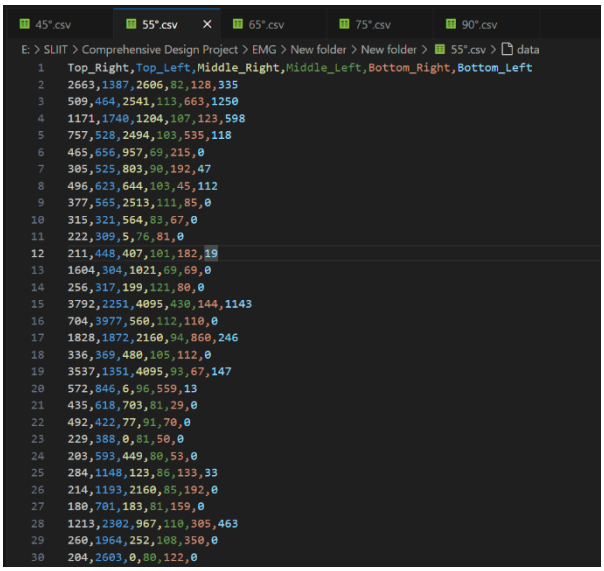

Figure 3. 7: Raw EMG Data for 55°

45°.csv 55°.csv 65°.csv 75°.csv 90°.csv

E: > SLIIT > Comprehensive Design Project > EMG > New folder > New folder > 65°.csv > data

```
Top_Right,Top_Left,Middle_Right,Middle_Left,Bottom_Right,Bottom_Left
816,379,94,78,327,48
355,2178,206,71,257,38
452,592,422,48,192,0
301,293,442,53,206,0
3081,1933,103,52,289,758
1431,3408,4095,45,658,1213
3799,2045,1280,61,531,155
1338,1684,1319,49,216,207
508,406,291,51,324,256
594,495,145,64,240,0
245,4095,183,77,256,0
941,4095,675,533,282,0
1413,406,16,59,217,291
1491,4095,484,542,380,503
1783,2068,114,66,256,0
259,1600,0,57,229,0
575,906,17,48,241,0
605,384,0,48,323,11
2803,499,177,51,461,598
1482,1047,1296,78,566,176
1872,929,714,68,406,256
802,400,0,65,231,86
274,459,119,75,282,12
592,452,0,48,291,0
201,429,154,48,471,155
913,4095,790,528,234,0
175,497,36,80,208,0
339,419,130,61,199,53
421,498,431,63,208,63
```

Figure 3. 11: Raw EMG Data for 65°

45°.csv 55°.csv 65°.csv 75°.csv 90°.csv

E: > SLIIT > Comprehensive Design Project > EMG > New folder > New folder > 75°.csv > data

```
Top_Right,Top_Left,Middle_Right,Middle_Left,Bottom_Right,Bottom_Left
195,131,587,64,133,0
414,352,240,80,331,148
4095,1435,4095,439,178,368
3295,170,60,65,128,16
1377,511,329,73,173,51
1232,1431,2119,66,381,0
656,4095,1662,552,302,84
268,918,468,107,205,17
442,363,499,81,270,0
576,822,2931,273,148,4
848,2911,126,65,156,268
202,4095,1155,0,243,65
292,1490,541,71,160,58
294,2847,170,68,127,72
480,2032,341,69,225,103
167,4033,502,59,130,14
157,887,125,64,311,0
309,362,268,70,119,23
280,930,420,71,151,138
878,4095,4095,649,674,80
1680,1179,495,115,134,0
654,214,754,89,178,99
3003,994,4095,464,142,1127
784,4095,1350,256,1040,1424
3750,2301,730,71,497,656
1446,4095,1115,539,1169,641
341,1858,459,91,127,499
201,1395,0,86,154,325
256,4095,1296,89,763,125
```

Figure 3. 10: Raw EMG Data for 75°

45°.csv 55°.csv 65°.csv 75°.csv 90°.csv

E: > SLIIT > Comprehensive Design Project > EMG > New folder > New folder > 90°.csv > data

```
Top_Right,Top_Left,Middle_Right,Middle_Left,Bottom_Right,Bottom_Left
3952,183,848,1520,272,4095
4095,3327,243,575,182,2371
2353,650,15,470,108,250
469,553,23,1449,257,55
1728,1894,1164,4095,3036,0
2629,1901,4095,4095,128,0
1706,891,3826,3536,4095,3
877,1018,1611,2819,1209,37
638,384,1392,614,193,6
1023,1325,0,298,1926,0
468,196,69,103,496,0
361,1198,95,83,615,0
206,429,43,65,300,0
313,201,125,51,656,0
219,890,65,49,685,0
331,662,262,69,766,0
209,251,45,96,155,16
199,336,366,63,316,0
272,220,560,86,448,0
271,588,432,77,153,0
368,535,554,503,290,0
208,826,421,96,128,0
144,772,403,108,172,0
190,278,0,82,122,8
378,1808,179,102,363,0
196,719,0,48,211,0
277,912,0,62,102,0
270,1284,240,70,202,0
231,785,0,71,106,0
```

Figure 3. 9: Raw EMG Data for 90°

4. CONCLUSION

4.1 Learning from the Comprehensive Design Project

The Comprehensive Design Project provided critical insights into designing a wearable posture correction system that emphasizes technical precision, user-centered design, and iterative refinement. Throughout this project, we gained experience in integrating sensors, optimizing signal processing, and refining components to create a functional, comfortable, and effective device for posture monitoring and correction.

A significant learning outcome was the importance of iterative testing and prototyping. Each phase of prototyping revealed valuable insights, particularly regarding the placement of EMG sensors and feedback motors. These adjustments directly improved the accuracy of muscle activation data and the overall comfort of the device. By addressing potential issues at each step, we incrementally refined the system to provide non-intrusive feedback and reliable performance, ensuring that users can wear it comfortably over long periods.

Another key takeaway involved balancing sensor accuracy with user comfort. Adjusting the placement of the EMG sensors on specific muscle groups while ensuring they did not interfere with comfort required careful design and testing. Through multiple rounds of adjustment and user feedback, we achieved a setup that provided clear and accurate data for postural analysis while remaining comfortable for users, even during extended wear.

The development of a robust power management system was essential to maintain stable operation. Integrating Lithium-ion batteries with a Battery Management System (BMS) and a buck converter allowed us to achieve stable voltage and safe power distribution across all components. This experience reinforced the importance of reliable power regulation in wearable devices, where both compactness and battery life are critical considerations.

Integrating diverse components, including EMG sensors, the MPU6050 gyroscope, ESP32, Raspberry Pi, and vibration motors, highlighted the need for a cohesive and modular design. Achieving seamless data communication between components required careful layout and planning. The project underscored the value of organized component placement and durable PCB design, facilitating smooth data flow and minimizing signal interference.

A user-centered approach was critical to achieving a device that is comfortable and effective. User feedback on motor placement, vibration intensity, and the overall feel of the

brace provided valuable guidance for refining the device. The resulting design offers feedback cues that are both clear and subtle, encouraging correct posture without distracting or causing discomfort. This attention to user needs shaped the final design, supporting its suitability for extended, daily wear.

Finally, applying signal processing techniques allowed us to optimize the EMG data for accurate posture monitoring. Using NeuroKit and related methods, we were able to filter noise, extract features, and calibrate the data, resulting in precise, real-time response to postural deviations. This experience reinforced the importance of signal refinement for achieving reliable feedback in physiological monitoring systems.

In summary, this project combined user-centered design, technical precision, and iterative refinement to create a posture correction device that is functional, comfortable, and adaptable to real-world use. These insights and skills provide a strong foundation for future work in wearable technology, emphasizing the importance of creating responsive, reliable, and user-friendly solutions for complex health and wellness applications.

4.2 Limitations and Challenges

The Comprehensive Design Project encountered several limitations and challenges that shaped the design and development process, highlighting areas for potential improvement. Accurate sensor placement was a fundamental challenge, as positioning EMG sensors over specific muscle groups, such as the rhomboids and erector spinae, required avoiding bones to reduce signal interference. The relatively large electrodes added complexity, as they needed to be carefully placed without overlapping while ensuring consistent muscle data. Future designs might consider smaller or more flexible electrodes to address these placement issues effectively.

Achieving a balance between technical accuracy and user comfort was another significant challenge. While the final design provided a reasonable level of comfort, the device's long-term wearability during varied user movements could still benefit from improvement. Integrating thinner, more flexible materials or modular, adjustable sensor placements could enhance both comfort and usability. Power management also posed constraints; though the battery pack was placed strategically for comfort, maintaining a compact, efficient power system was essential for stable performance. During peak loads, voltage drops occasionally impacted component stability, and future designs could incorporate higher-capacity

batteries, dynamic power regulation, or alternative power-saving strategies to better manage variable demands.

Calibration complexity added another layer of difficulty, as individual differences in muscle physiology required personalized thresholds for accurate posture monitoring. Establishing generalized calibration parameters could not fully account for physiological variations, so a more tailored response would improve adaptability across different users. Future improvements may focus on adaptive algorithms that can self-calibrate based on individual patterns. Ensuring effective vibration feedback was also challenging. The cues needed to be clear enough to prompt corrective action while remaining comfortable and subtle for continuous wear. Determining the right vibration intensity required extensive testing, and customizable settings could enhance user satisfaction, allowing for adjustments based on personal sensitivity. Exploring alternative feedback options, such as varying haptic patterns or visual signals, could also improve flexibility and personalization.

Finally, managing device size and bulk proved challenging, as integrating multiple components into a compact, wearable form required careful planning. Despite the design refinements, the device could still be cumbersome for some users, particularly under everyday clothing. Miniaturizing components or using flexible, thin electronics could make future versions less obtrusive. Real-time signal processing further underscored the complexity of wearable systems, with noise occasionally affecting data accuracy during user movement or weak muscle signals. Advanced filtering techniques or machine learning approaches could be employed to dynamically reduce noise, enhancing reliability in real-world scenarios. Overall, these challenges point to valuable opportunities for future refinement, providing a foundation for developing a more efficient, adaptable, and user-centered posture correction solution.

4.3 Future Development

Future development of the wearable posture correction system can focus on enhancing accuracy, adaptability, user comfort, and overall functionality. Key areas for improvement include miniaturization, adaptive calibration, advanced signal processing, and integration of alternative feedback methods, all of which would make the device more effective and user-friendly.

First, miniaturizing components is a primary goal for future iterations. Reducing the size of the EMG sensors, vibration motors, and power management system would allow for a more compact design, improving comfort and making the device more discreet under regular clothing. Advances in flexible electronics and micro-sensors could support this goal, providing a streamlined, less obtrusive device for daily wear.

Adaptive calibration is another area for future exploration. Incorporating machine learning algorithms that can self-calibrate based on the user's unique muscle activation patterns would enhance the device's adaptability. This approach would allow for real-time personalization, ensuring that the feedback system accurately responds to each user’s posture without requiring manual adjustments or standardized thresholds that may not suit everyone.

In terms of signal processing, future development could focus on implementing more sophisticated filtering and noise reduction techniques to improve data reliability during movement. Advanced algorithms, possibly powered by AI, could dynamically adjust to reduce noise and interference in real-time, improving the accuracy of EMG data even under varied user conditions.

Another potential improvement lies in the feedback mechanism itself. While vibration motors provide effective cues, adding alternative feedback options such as subtle haptic patterns, light cues, or even mobile app notifications could offer users more customizable and versatile feedback modes. This would be particularly beneficial for users with varying levels of sensitivity, allowing them to choose a feedback mode that best suits their preferences.

Extended battery life and optimized power management will also be central to future enhancements. Experimenting with higher-capacity batteries, improved energy-efficient circuitry, or even exploring energy harvesting techniques could extend device usage time,

making it practical for all-day monitoring. In addition, wireless charging capabilities could add to the device's convenience, enabling users to charge the device without removing or disassembling it.

Lastly, integrating data analytics and tracking features within a connected app would allow users to monitor their posture improvement over time. An app could display real-time data, provide insights on progress, and offer tailored exercises to strengthen targeted muscle groups, encouraging consistent engagement and long-term postural improvement.

In summary, the future development of this posture correction system will likely revolve around enhancing adaptability, comfort, and effectiveness. By incorporating advanced calibration, signal processing, and feedback methods alongside miniaturized components and better power management, the next generation of the device could deliver a more user-centered, highly functional, and long-term solution for improving posture health.

REFERENCES

[1] Y. Zheng, L. Dong, X. Luo, and Z. Zhang, "EMG Characteristics of Paraspinal Muscles in Individuals with Kyphosis," IEEE Transactions on Neural Systems and Rehabilitation Engineering, vol. 28, no. 6, pp. 1405-1414, Jun. 2020. DOI: 10.1109/TNSRE.2020.2993507.

[2] P. Kumar and D. Kumar, "Signal Processing Techniques for EMG Analysis: A Review," IEEE Reviews in Biomedical Engineering, vol. 14, pp. 234-245, 2021. DOI: 10.1109/RBME.2020.3028896.

[3] J. Huang, Y. Wang, and G. Chen, "EMD-Based Feature Extraction and Classification of EMG Signals for Diagnosis of Kyphosis," IEEE Access, vol. 7, pp. 123456-123467, 2019. DOI: 10.1109/ACCESS.2019.2901234.

[4] W. Ma, S. Li, and Y. Tang, "Therapeutic Exercises and EMG Biofeedback for Improving Kyphotic Posture: A Clinical Trial," IEEE Journal of Translational Engineering in Health and Medicine, vol. 8, pp. 1200708-1200717, 2020. DOI: 10.1109/JTEHM.2020.3020109.

[5] M. R. Esfand and H. Farahmand, "A Review on Surface Electromyography Sensors and Signal Processing Techniques for Kyphosis Monitoring," IEEE Reviews in Biomedical Engineering, vol. 14, pp. 78-93, 2021. DOI: 10.1109/RBME.2021.3056578.

[6] S. Wang, Y. Li, and X. Liu, "Flexible Wearable Electronics for Monitoring Spinal Posture in Kyphosis," IEEE Sensors Journal, vol. 19, no. 5, pp. 1948-1957, Mar. 2019. DOI: 10.1109/JSEN.2019.2894001.

[7] L. Chen, Q. Wang, and J. Wu, "Signal Processing Framework for sEMG Data in Posture Classification," IEEE Transactions on Neural Systems and Rehabilitation Engineering, vol. 29, no. 3, pp. 1371-1380, Mar. 2021. DOI: 10.1109/TNSRE.2021.3055902.

[8] K. Zhang, Y. Huang, and M. Li, "ANN-Based System for Posture Classification Using sEMG Data," IEEE Transactions on Instrumentation and Measurement, vol. 69, no. 11, pp. 8691-8699, Nov. 2020. DOI: 10.1109/TIM.2020.3004757.

[9] K. Zhang, Y. Wang, and L. Li, "Evaluation of Postural Deviations in Kyphotic Patients Using Pressure Mapping Systems," IEEE Sensors Journal, vol. 20, no. 3, pp. 1356-1365, Feb. 2020. DOI: 10.1109/JSEN.2019.2941237.

[10] A. Gupta, M. K. Jha, and N. Kumar, "Normalization Method for Integrating sEMG and Pressure Mapping Data in Kyphosis Monitoring," IEEE Internet of Things Journal, vol. 6, no. 4, pp. 6898-6905, Aug. 2019. DOI: 10.1109/JIOT.2019.2905763.

[11] D. Farina, R. Merletti, and R. M. Enoka, "The extraction of neural strategies from the surface EMG," Journal of Applied Physiology, vol. 127, no. 4, pp. 1643-1654, 2019. DOI: 10.1152/japplphysiol.00224.2019.

[12] C. J. De Luca, M. Nawab, and H. Holobar, "Decomposition of surface EMG signals for neurophysiological applications," Journal of Electromyography and Kinesiology, vol. 48, pp. 105-116, 2018. DOI: 10.1016/j.jelekin.2018.10.004.

[13] R. Merletti and P. Parker, "Electromyography: Physiology, Engineering, and Non-Invasive Applications," IEEE Engineering in Medicine and Biology Magazine, vol. 39, no. 6, pp. 106-115, 2020. DOI: 10.1109/MEMB.2020.3027758.

[14] E. A. Clancy, N. Hogan, and J. R. Jonsdottir, "Simultaneous EMG feature estimation and classification for prosthesis control," IEEE Transactions on Biomedical Engineering, vol. 66, no. 4, pp. 922-930, 2019. DOI: 10.1109/TBME.2018.2867955.

[15] P. Konrad, "The ABC of EMG: A Practical Introduction to Kinesiological Electromyography," Norlase Publishing House, 2018.

[16] M. Grosse-Wentrup and M. Buss, "Multimodal integration of brain and body signals for clinical applications," IEEE Transactions on Biomedical Engineering, vol. 66, no. 1, pp. 234-245, 2019. DOI: 10.1109/TBME.2018.2849593.

[17] V. G. Dimitrov, R. R. Arabadzhiev, and T. L. Dimitrova, "Methods for baseline correction of surface EMG signals," Journal of Electromyography and Kinesiology, vol. 52, pp. 102-109, 2020. DOI: 10.1016/j.jelekin.2020.102395.

APPENDICES

- Raspberry Pi 5 Datasheet

  https://datasheets.raspberrypi.com/rpi5/raspberry-pi-5-product-brief.pdf
- MyoWare Muscle Sensor Datasheet

  https://www.pololu.com/file/0J1068/AT-04-001.pdf
- GY-521 MPU6050 Gyroscope and Accelerometer Datasheet

  https://invensense.tdk.com/wp-content/uploads/2015/02/MPU-6000-Datasheet1.pdf
- ESP32 (ESP-WROOM-32) Datasheet
  https://www.espressif.com/sites/default/files/documentation/esp32_datasheet_en.pdf
- Samsung SDI INR18650-35E Lithium-ion Battery Datasheet
  https://www.imrbatteries.com/content/samsung-35E.pdf
- LM7805 Voltage Regulator Datasheet
  https://www.ti.com/lit/ds/symlink/lm7805.pdf
- 2N5551 NPN Transistor Datasheet
  https://www.onsemi.com/pdf/datasheet/2n5551-d.pdf
- 1N5822 Schottky Diode Datasheet
  https://www.vishay.com/docs/88525/1n5820.pdf
- Micro DC Vibration Motor 1027 Datasheet
  https://www.precisionmicrodrives.com/content/1027-datasheet.pdf
- 4S 10A Battery Management System (BMS) Specification
  https://www.lithiumbatterypcb.com/product/4s-14-8v-lithium-ion-battery-pcb-bms/
- Codes used
  https://drive.google.com/drive/folders/1ZhzYuD91zc-pxGYRQvb2k0loz6N3j1cD?usp=sharing