PREDICTIVE MAINTENANCE FOR ROBOT MOTORS
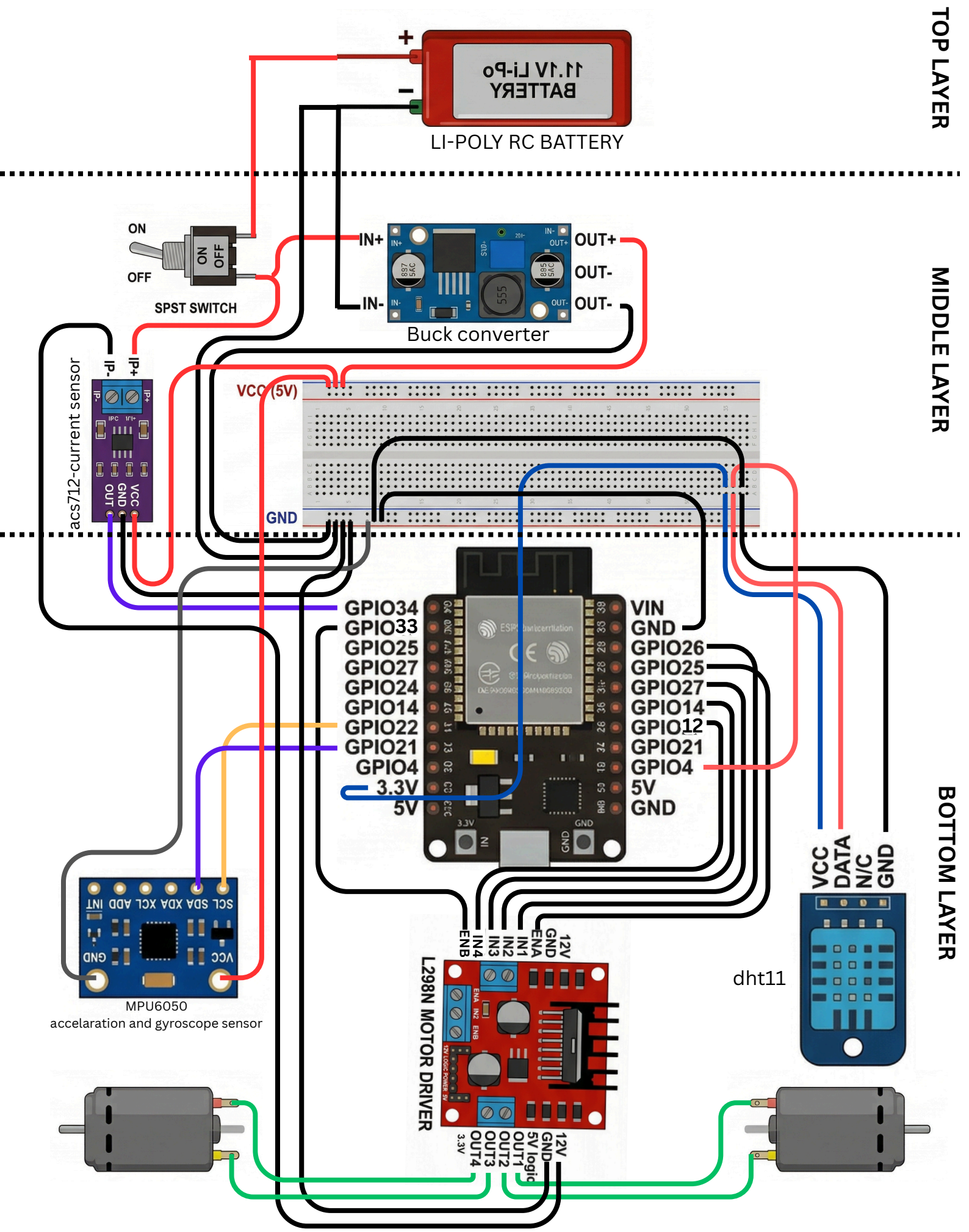
CONNECTION DIAGRAM